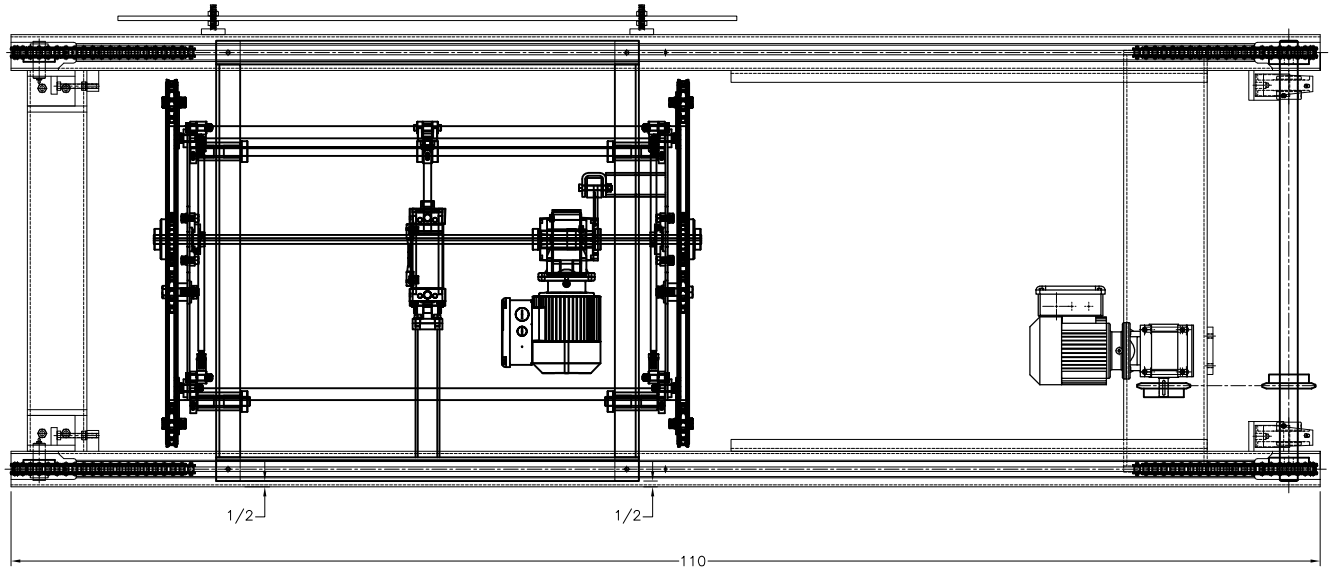

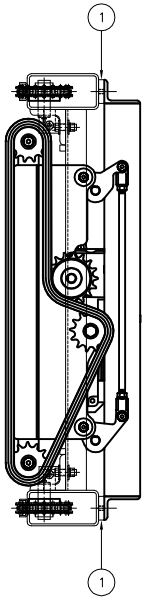

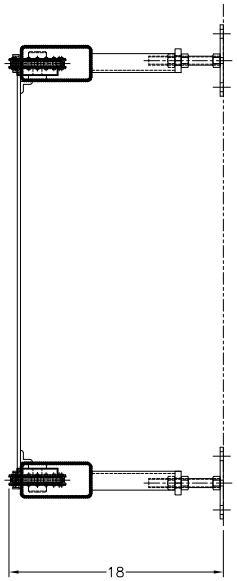

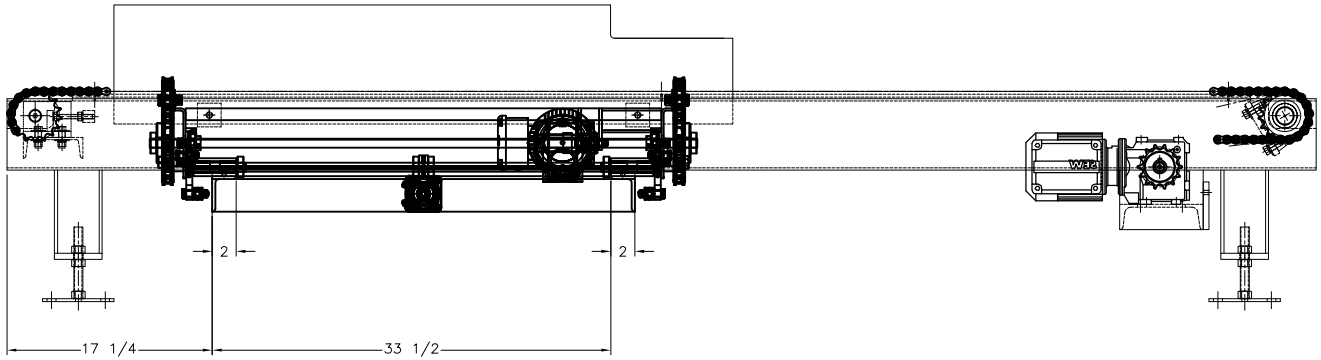

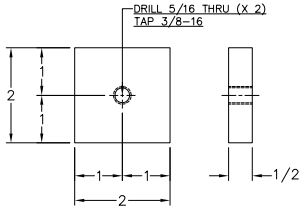

DETAIL #1

QTY = 4