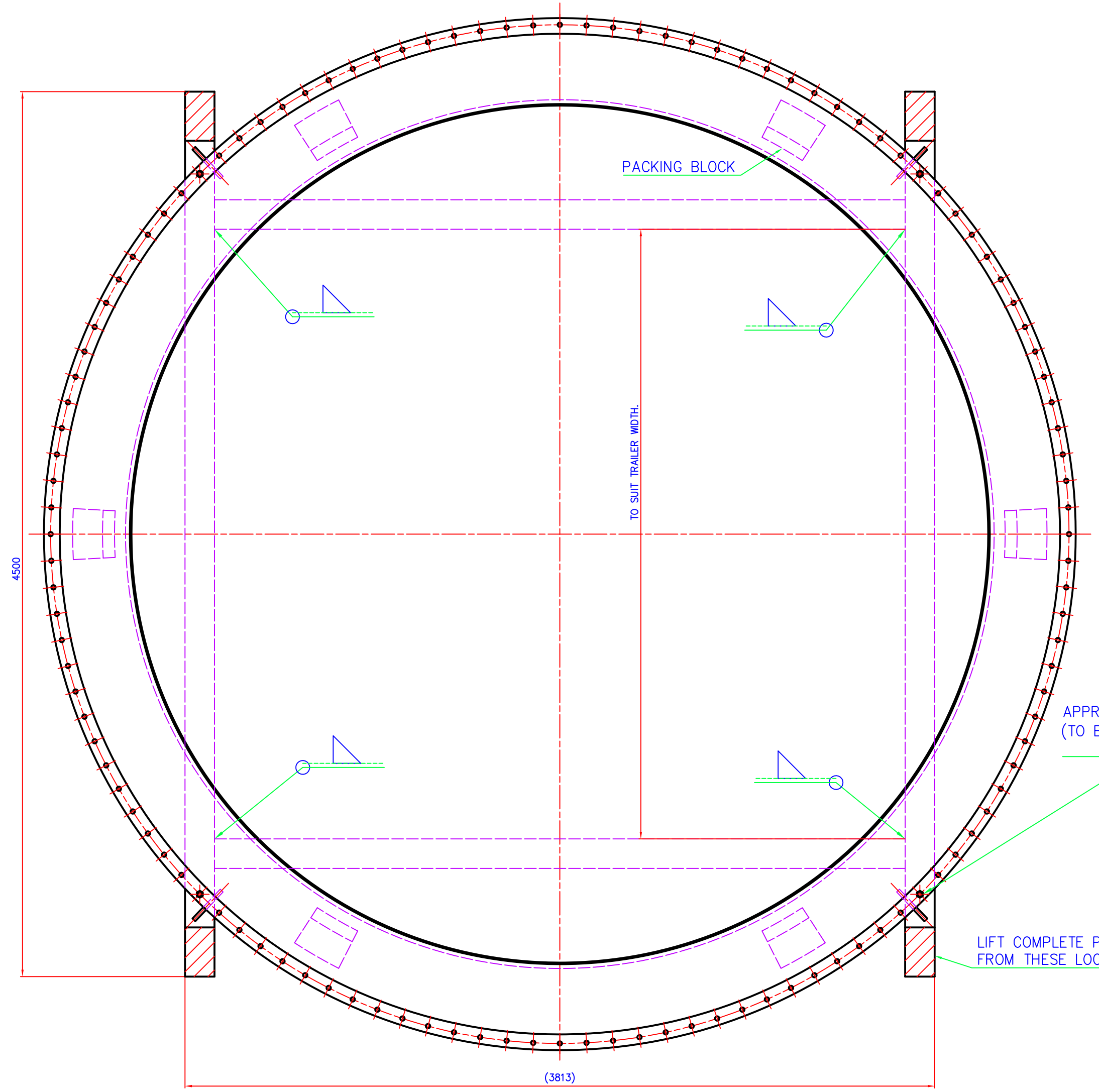
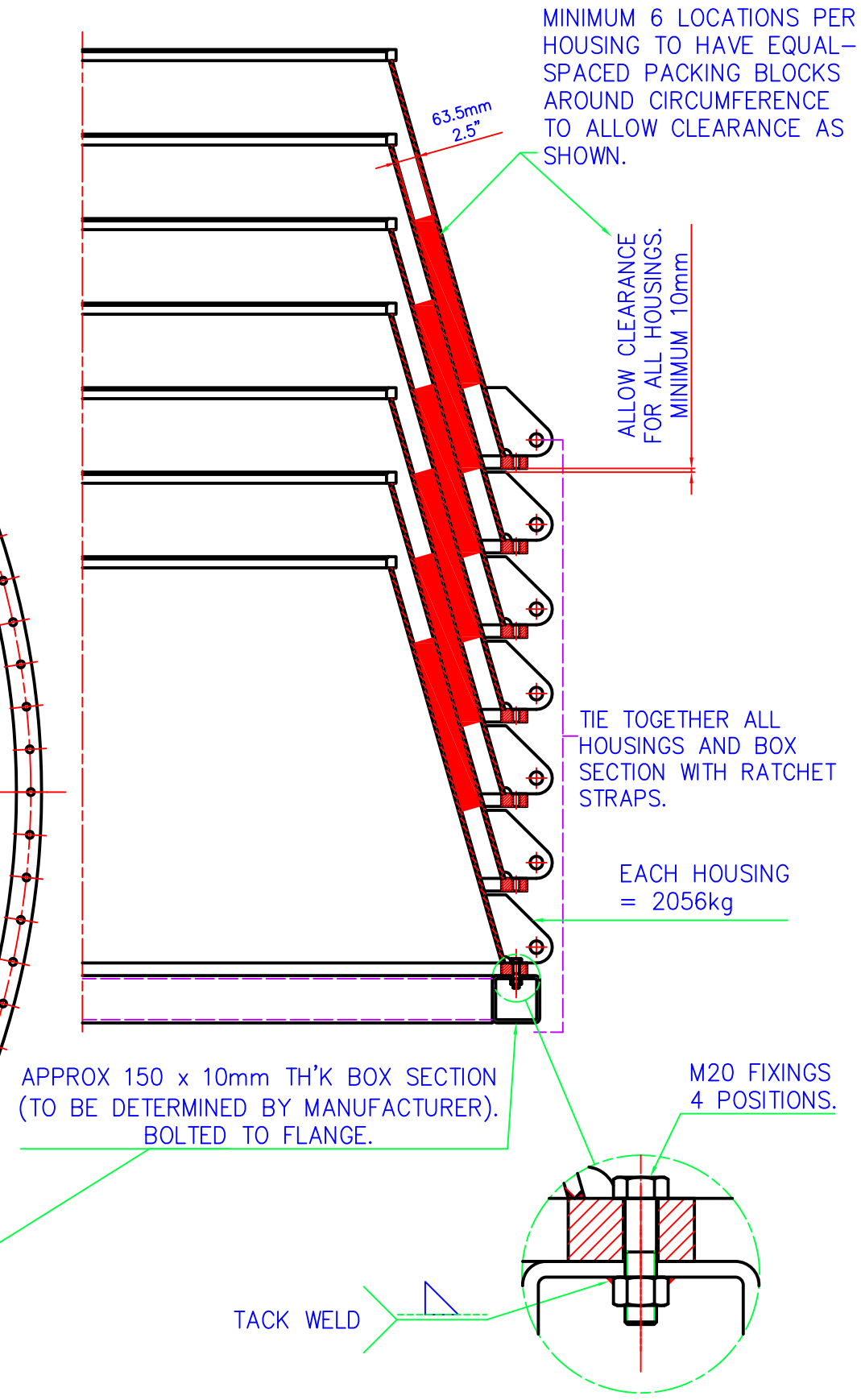
SECTION – DRAWN TURNED