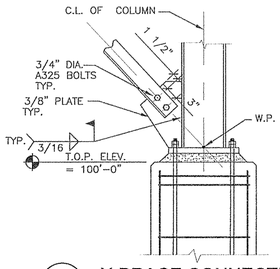

7/714 X-BRACE CONNECTION
SCALE: 3/4"=1'-0"

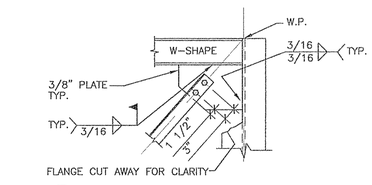

6/714 X-BRACE CONNECTION
SCALE: 3/4"=1'-0"

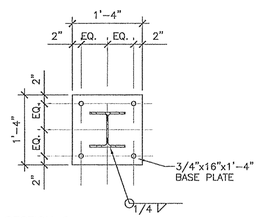

SECTION C

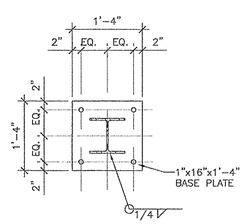

SECTION B

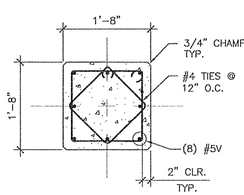

SECTION A

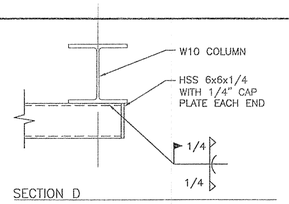

SECTION D

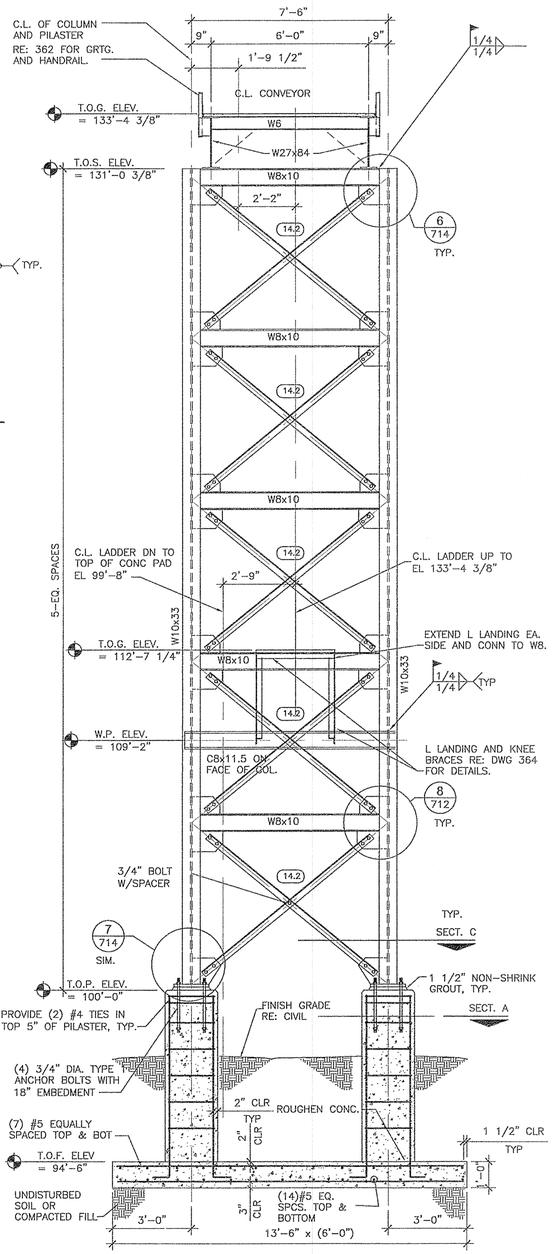

4/714 GRAIN CONVEYOR SUPPORT PIER
SCALE: 3/8" = 1'-0"

713

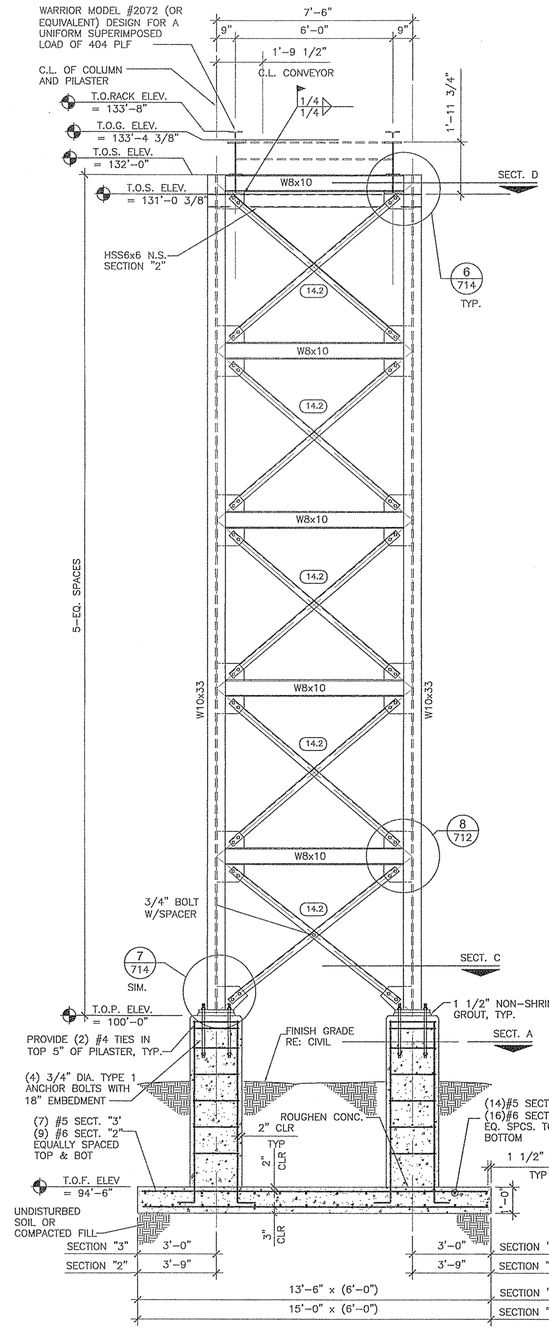

3/714 2/714 GRAIN CONVEYOR SUPPORT PIER
SCALE: 3/8" = 1'-0"

713

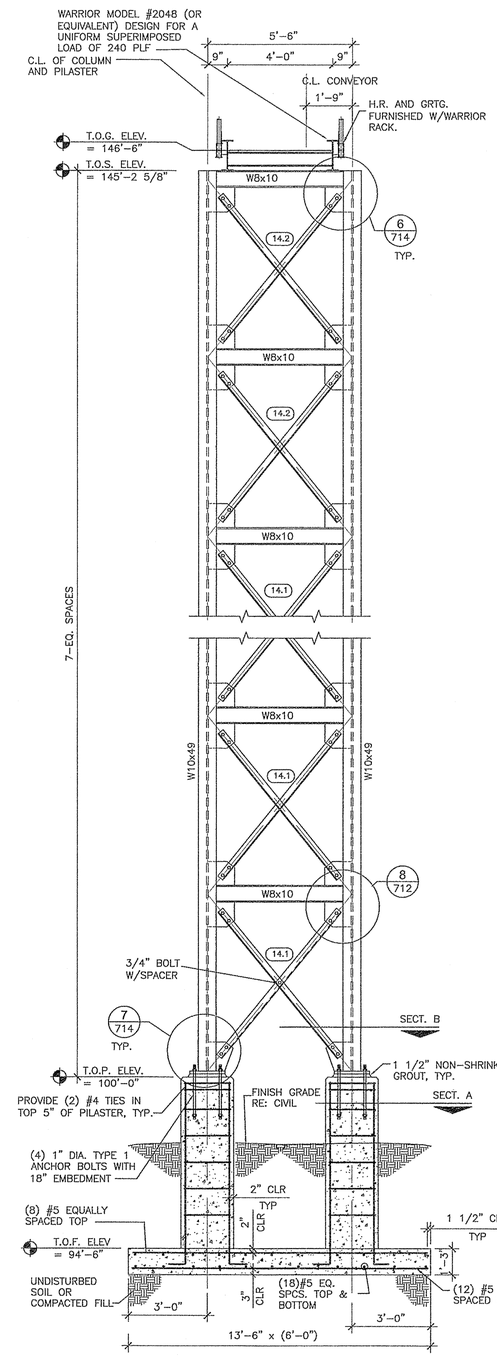

1/714 DDG CONVEYOR SUPPORT PIER
SCALE: 3/8" = 1'-0"

713

NO.	REVISION	BY	CHK'D	DATE
0	ISSUED FOR CONSTRUCTION	LMD	TRF	12/12/2006

KEYNOTES

14.1 L3 1/2 x 3 1/2 x1/4 X-BRACING WITH (4) 3/4" DIA. A325 BOLTS AT BOTH ENDS. RE: 356 FOR TYPICAL DETAILS.

14.2 L3x3x1/4 X-BRACING WITH (2) 3/4" DIA. A325 BOLTS AT BOTH ENDS. RE: 356 FOR TYPICAL DETAILS.

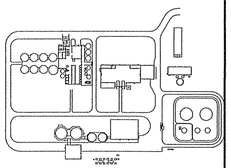

KEYPLAN

RICHARD J. POTTER
ENGINEER
FAGEN ENGINEERING LLC
TEL. 320-564-4573

RICHARD J. POTTER E-29590 PROFESSIONAL ENGINEER STATE OF NEBRASKA

1/18/07

ABE
ADVANCED BIO-ENERGY, LLC

FAGEN ENGINEERING LLC
CIVIL – STRUCTURAL – MECHANICAL – ELECTRICAL ENGINEERS
501 West Highway 212, P.O. Box 159
Granite Falls, MN 56241 Tel. 320-564-4573

This drawing was prepared for use on a specific site and is not suitable for use on different project sites or at a later time. All rights are reserved, no design or plan shall be used or reproduced in any form without the written permission from Fagen Engineering LLC. ©Copyright

ADVANCED BIO-ENERGY, LLC
FAIRMONT, NEBRASKA

GRAIN AND DDG CONVEYOR SUPPORT PIERS

DRAWN: LMD
CHK'D: TRF
DATE: 8/23/2006
SCALE: AS NOTED

SHEET NUMBER 714

JOB NUMBER EG1668

REVISION NUMBER 0

FILE NAME: N:\Engineers\Clients\Fagen Inc\G3 1581 MUSE Detail Design\Dwgs\Struct\1581s355.dwg DATE: AUG 23, 2003 TIME: 3:15 PM VIEWED BY: NTF