REVISION HISTORY				
REV	ECO	DESCRIPTION	DATE	BY
	N/A	N/A	N/A	N/A

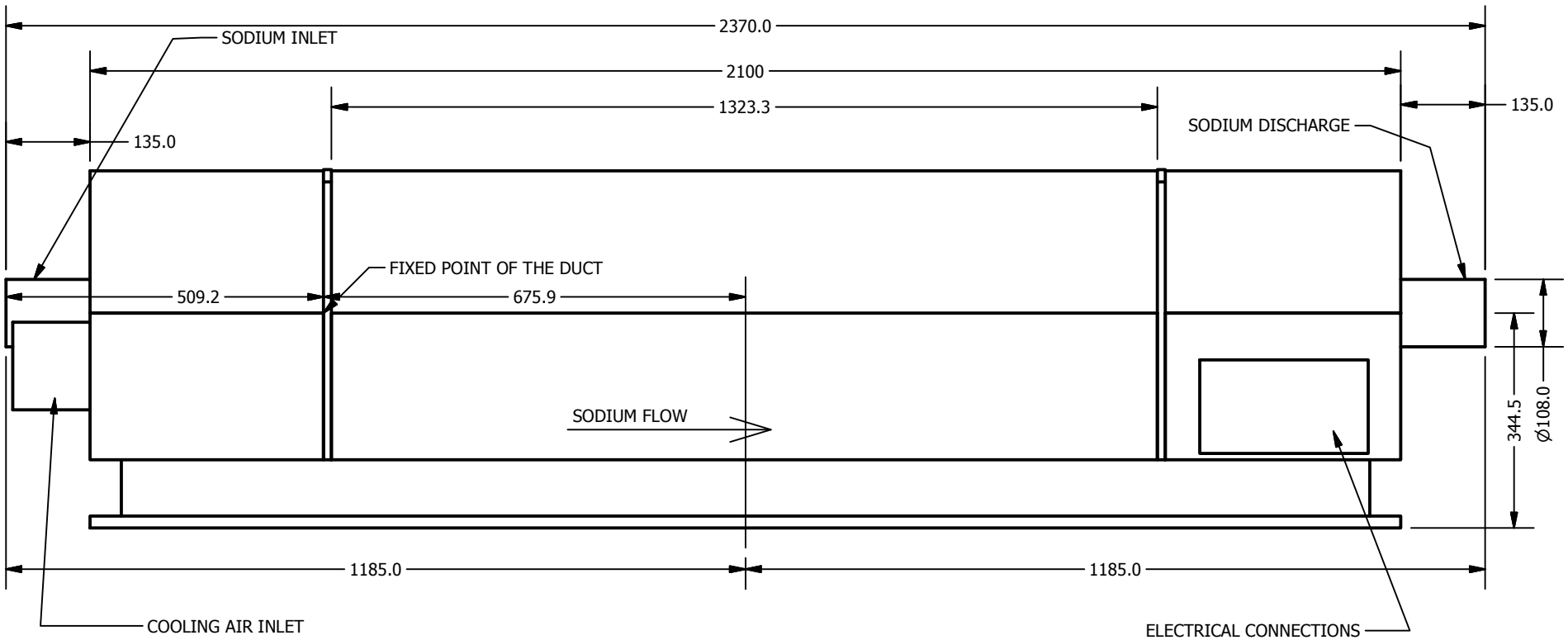

FRONT VIEW

\\server1\data\CAD\INVENTOR\PUMPS\SODIUM PUMPS\LA500\Assembly1.iam

UNLESS OTHERWISE SPECIFIED:

TOLERANCES (mm):

X.XX	=	±0.01
X.X	=	±0.1
X.	=	±0.2
∠	=	±0.5°

WORKMANSHIP:
HOLES: ◎ ⊥ // ±.1
SURFACES: ⊥ // ±.1

DIMENSIONS ARE IN mm
INTERPRET GD&T PER ASME Y14.5M-1994

cmi novacast inc.

	INIT	DATE
DRAWN	Lee	3/25/2010
CHECKED		
MFG		
APPROVED		

MATERIAL
FINISH
TREATMENT
HARDNESS

PROPRIETARY AND CONFIDENTIAL
THE INFORMATION CONTAINED IN THIS DRAWING IS THE SOLE PROPERTY OF **cmi novacast, inc.** ANY REPRODUCTION, WITHOUT THE EXPRESS WRITTEN PERMISSION OF **cmi novacast, inc.**, IS PROHIBITED.

TITLE

SIZE: A
DWG NR: **LA 500 PUMP**
REV

SCALE
MASS: 1257.872 kg
MAT'L VOLUME: 153630888.5 mm^3
SHEET 1 OF 8

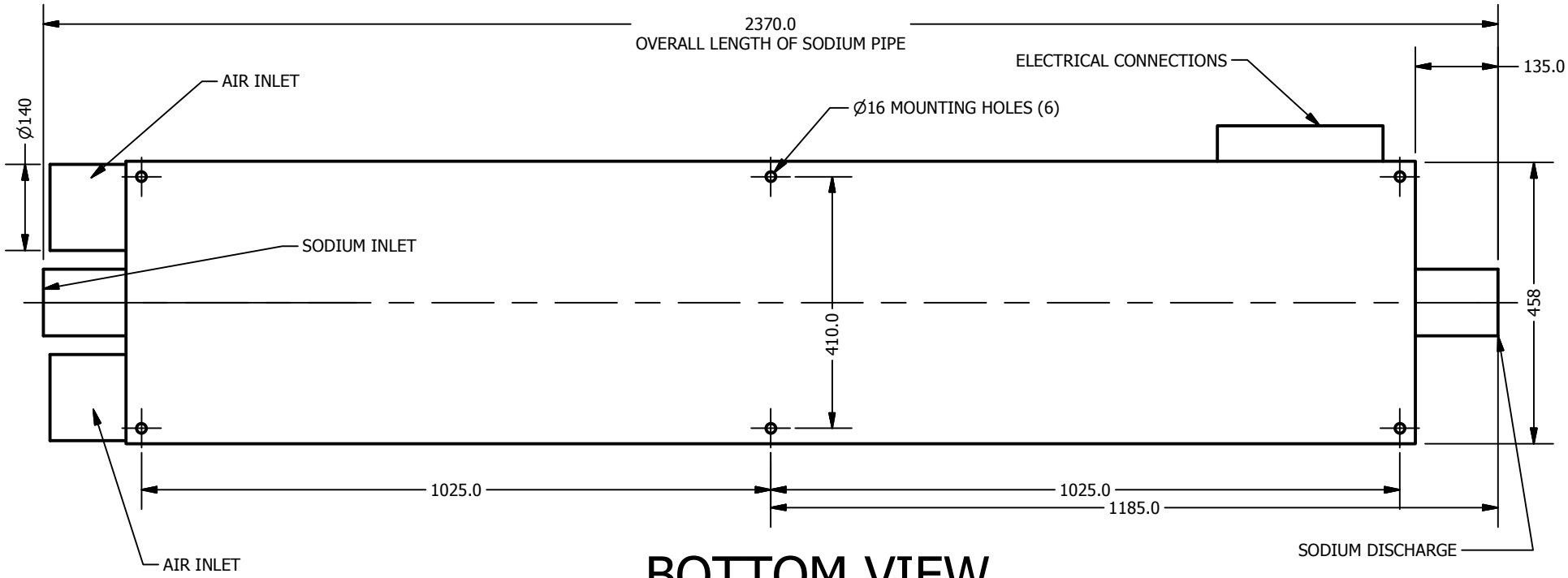

BOTTOM VIEW

\\server1\data\CAD\INVENTOR\PUMPS\SODIUM PUMPS\LA500\Assembly1.iam

UNLESS OTHERWISE SPECIFIED:

TOLERANCES (mm):

X.XX	=	±0.01
X.X	=	±0.1
X.	=	±0.2
∠	=	±0.5°

WORKMANSHIP:
HOLES: ◎ ⊥ // ±.1
SURFACES: ⊥ // ±.1

DIMENSIONS ARE IN mm
INTERPRET GD&T PER ASME Y14.5M-1994

cmi novacast inc.

		INIT	DATE
MATERIAL		DRAWN Lee	3/25/2010
FINISH		CHECKED	
TREATMENT		MFG	
HARDNESS		APPROVED	

PROPRIETARY AND CONFIDENTIAL
THE INFORMATION CONTAINED IN THIS DRAWING IS THE SOLE PROPERTY OF **cmi novacast, inc.** ANY REPRODUCTION, WITHOUT THE EXPRESS WRITTEN PERMISSION OF **cmi novacast, inc.**, IS PROHIBITED.

TITLE

SIZE	DWG NR	REV
A	**LA 500 PUMP**	

SCALE	MASS	MAT'L VOLUME	SHEET
	1257.872 kg	153630888.5 mm^3	2 OF 8

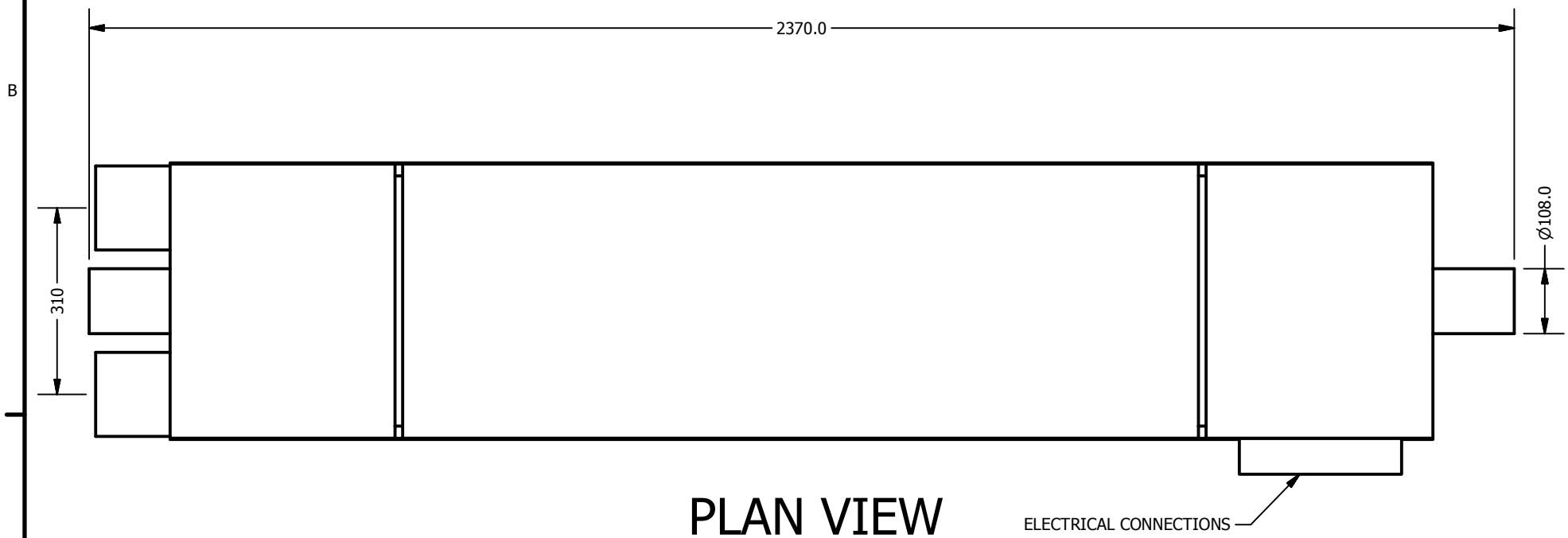

PLAN VIEW

\\server1\data\CAD\INVENTOR\PUMPS\SODIUM PUMPS\LA500\Assembly1.iam

UNLESS OTHERWISE SPECIFIED:	MATERIAL	INIT	DATE	**PROPRIETARY AND CONFIDENTIAL**
TOLERANCES (mm): X.XX = ±0.01, X.X = ±0.1, X. = ±0.2, ∠ = ±0.5°		DRAWN Lee	3/25/2010	THE INFORMATION CONTAINED IN THIS DRAWING IS THE SOLE PROPERTY OF **cmi novacast, inc.** ANY REPRODUCTION, WITHOUT THE EXPRESS WRITTEN PERMISSION OF **cmi novacast, inc.**, IS PROHIBITED.
	FINISH	CHECKED		TITLE
WORKMANSHIP: HOLES: ◎ ⊥ // ±.1 SURFACES: ⊥ // ±.1	TREATMENT	MFG		SIZE A / DWG NR **LA 500 PUMP** / REV
DIMENSIONS ARE IN mm INTERPRET GD&T PER ASME Y14.5M-1994	HARDNESS	APPROVED		SCALE / MASS 1257.872 kg / MAT'L VOLUME 153630888.5 mm^3 / SHEET 3 OF 8

cmi novacast inc.

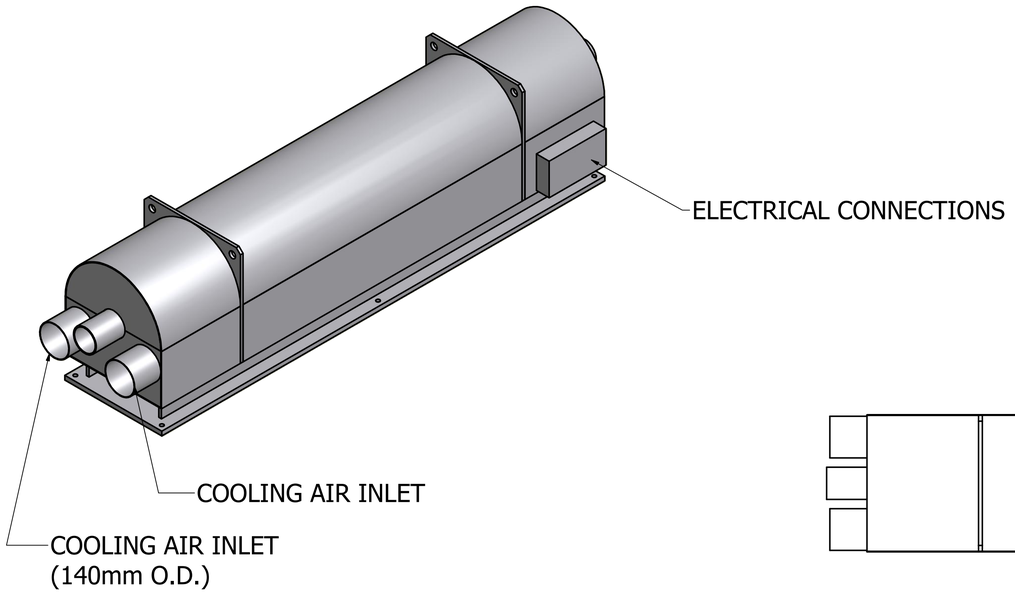

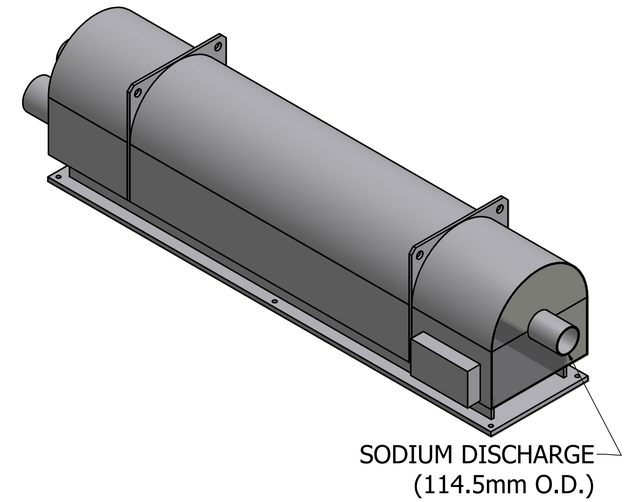

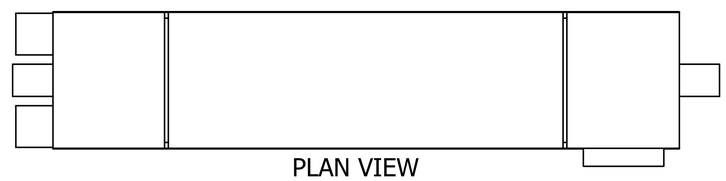

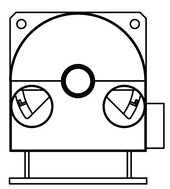

VIEW FROM
SODIUM INLET END

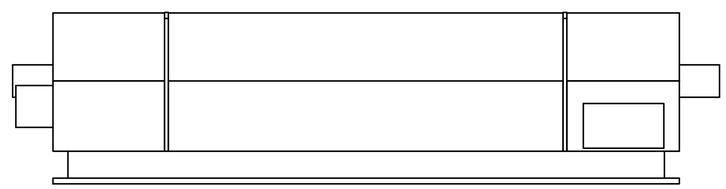

FRONT VIEW

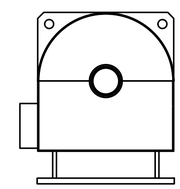

VIEW FROM SODIUM
DISCHARGE END

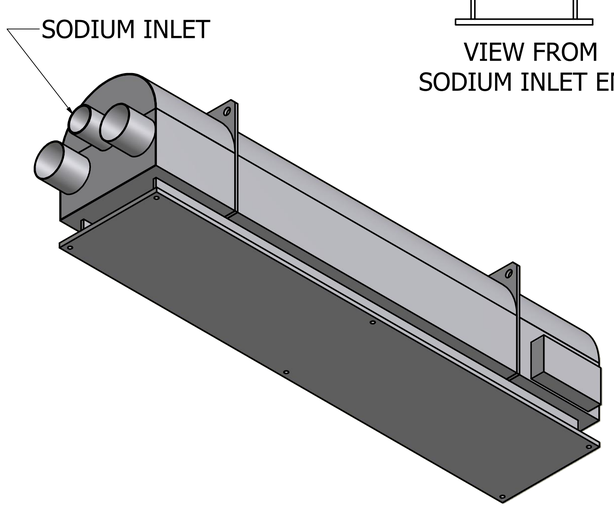

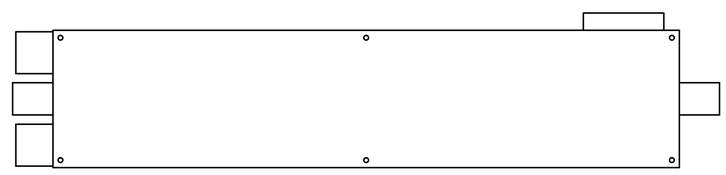

BOTTOM VIEW

UNLESS OTHERWISE SPECIFIED: TOLERANCES (mm): X.XX = ±0.01, X.X = ±0.1, X. = ±0.2, ∠ = ±0.5°	MATERIAL	DRAWN Lee	3/25/2010	INIT / DATE
WORKMANSHIP: HOLES: ⊥ // ±.1, SURFACES: ⊥ // ±.1	FINISH	CHECKED		
DIMENSIONS ARE IN mm INTERPRET GD&T PER ASME Y14.5M-1994	TREATMENT	MFG		
	HARDNESS	APPROVED		

cmi novacast inc.

PROPRIETARY AND CONFIDENTIAL
THE INFORMATION CONTAINED IN THIS DRAWING IS THE SOLE PROPERTY OF **cmi novacast, inc.** ANY REPRODUCTION, WITHOUT THE EXPRESS WRITTEN PERMISSION OF **cmi novacast, inc.**, IS PROHIBITED.

TITLE

SIZE D | DWG NR **LA 500 PUMP** | REV

SCALE | MASS 1257.872 kg | MAT'L VOLUME 153630888.5 mm^3 | SHEET 4 OF 8

\\server1\data\CAD\INVENTOR\PUMPS\SODIUM PUMPS\LA500\Assembly1.ipm

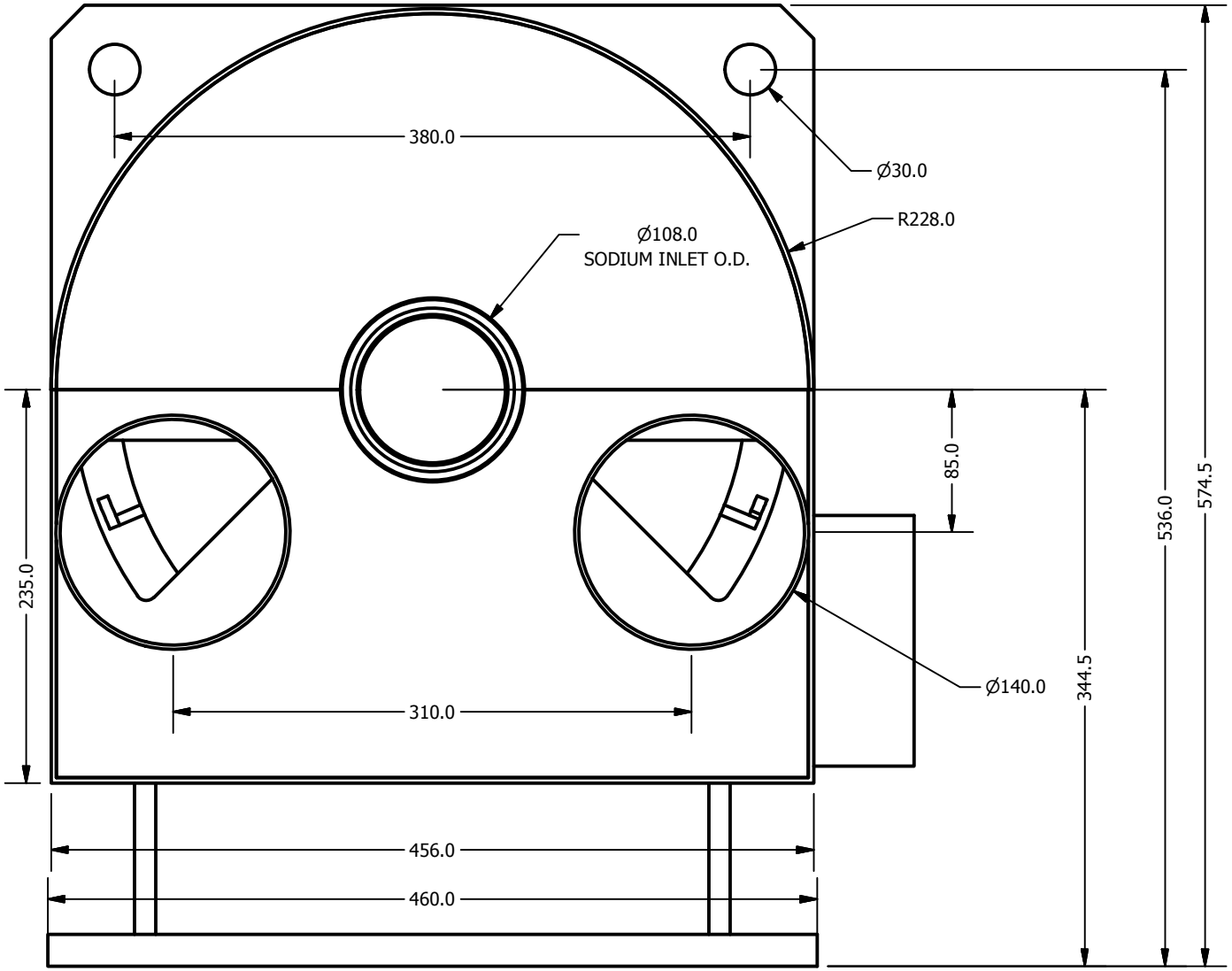

\\server1\data\CAD\INVENTOR\PUMPS\SODIUM PUMPS\LA500\Assembly1.iam

UNLESS OTHERWISE SPECIFIED:

TOLERANCES (mm):

X.XX	=	±0.01
X.X	=	±0.1
X.	=	±0.2
∠	=	±0.5°

WORKMANSHIP:
HOLES: ◎ ⊥ // ±.1
SURFACES: ⊥ // ±.1

DIMENSIONS ARE IN mm
INTERPRET GD&T PER
ASME Y14.5M-1994

cmi novacast inc.

		INIT	DATE
MATERIAL		DRAWN Lee	3/25/2010
FINISH		CHECKED	
TREATMENT		MFG	
HARDNESS		APPROVED	

PROPRIETARY AND CONFIDENTIAL
THE INFORMATION CONTAINED IN THIS DRAWING IS THE SOLE PROPERTY OF **cmi novacast, inc.** ANY REPRODUCTION, WITHOUT THE EXPRESS WRITTEN PERMISSION OF **cmi novacast, inc.**, IS PROHIBITED.

TITLE
INLET-END VIEW

SIZE	DWG NR	REV
A	**LA 500 PUMP**	

SCALE	MASS	MAT'L VOLUME	SHEET
	1257.872 kg	153630888.5 mm^3	5 OF 8

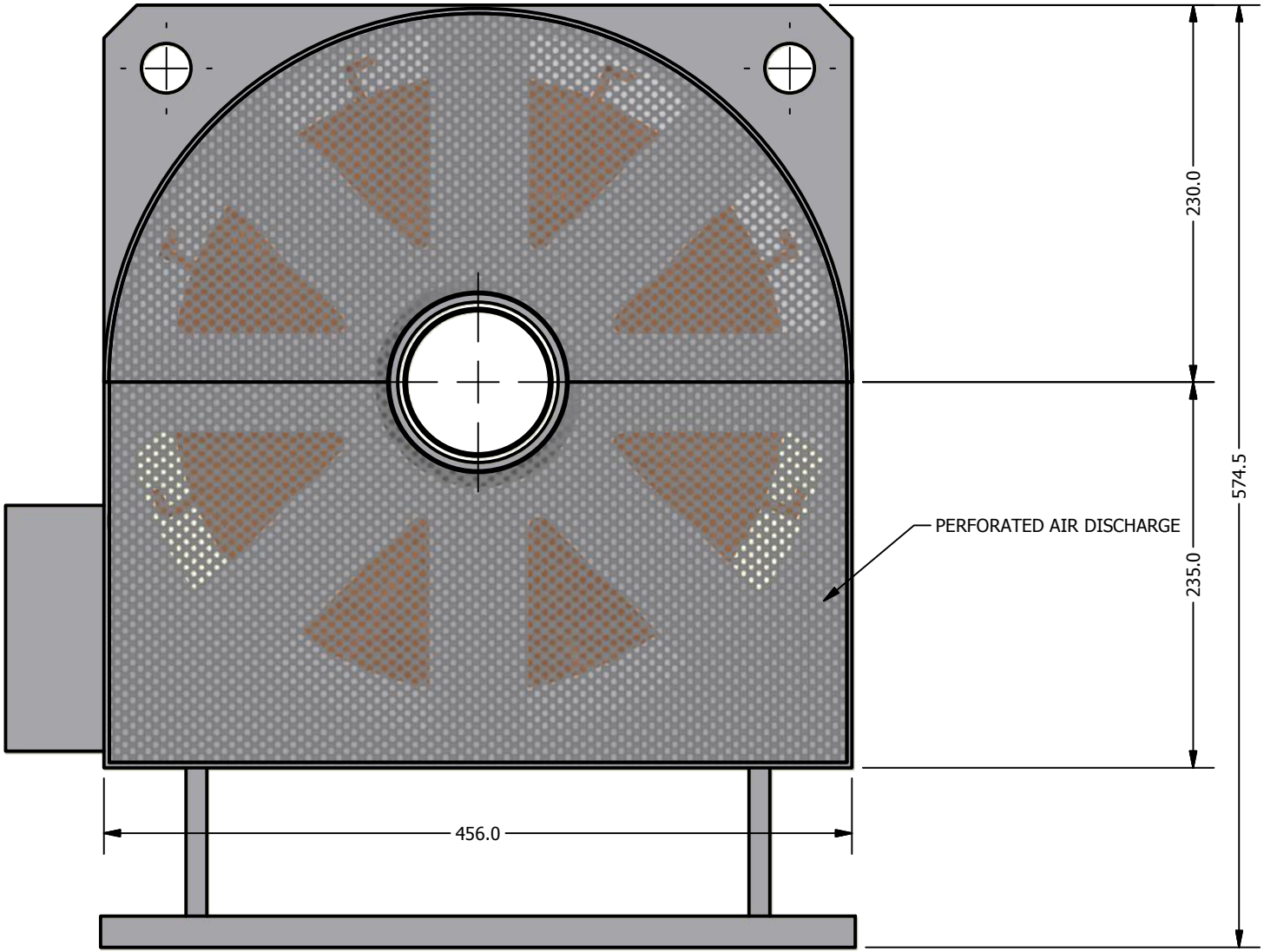

\\server1\data\CAD\INVENTOR\PUMPS\SODIUM PUMPS\LA500\Assembly1.iam

UNLESS OTHERWISE SPECIFIED:

TOLERANCES (mm):

X.XX	=	±0.01
X.X	=	±0.1
X.	=	±0.2
∠	=	±0.5°

WORKMANSHIP:
HOLES: ◎ ⊥ // ±.1
SURFACES: ⊥ // ±.1

DIMENSIONS ARE IN mm
INTERPRET GD&T PER
ASME Y14.5M-1994

cmi novacast inc.

	INIT	DATE
MATERIAL		
DRAWN	Lee	3/25/2010
FINISH	CHECKED	
TREATMENT	MFG	
HARDNESS	APPROVED	

PROPRIETARY AND CONFIDENTIAL

THE INFORMATION CONTAINED IN THIS DRAWING IS THE SOLE PROPERTY OF **cmi novacast, inc.** ANY REPRODUCTION, WITHOUT THE EXPRESS WRITTEN PERMISSION OF **cmi novacast, inc.**, IS PROHIBITED.

TITLE

DISCHARGE END VIEW

SIZE	DWG NR	REV
A	**LA 500 PUMP**	

SCALE	MASS	MAT'L VOLUME	SHEET
	1257.872 kg	153630888.5 mm^3	6 OF 8

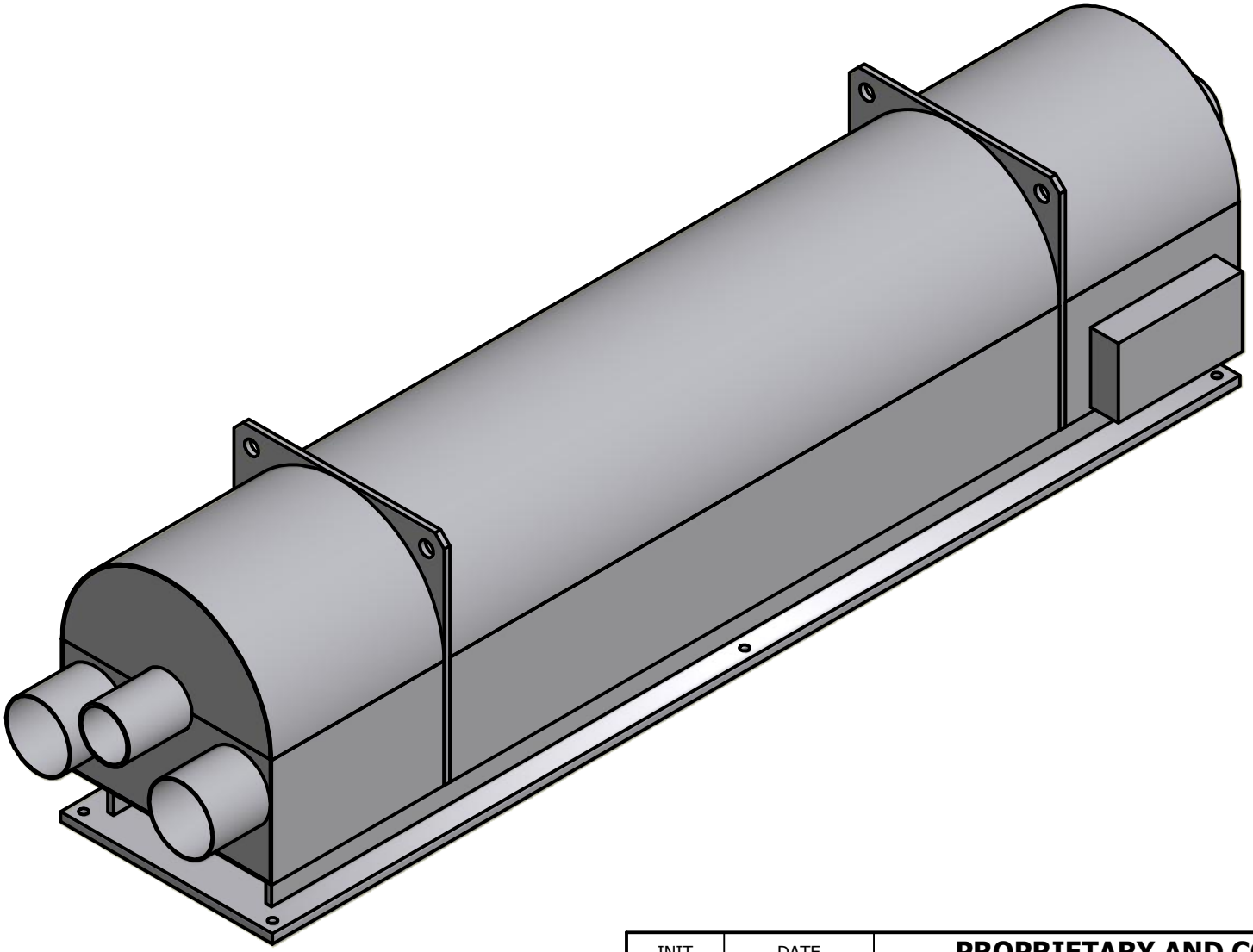

\\server1\data\CAD\INVENTOR\PUMPS\SODIUM PUMPS\LA500\Assembly1.iam

UNLESS OTHERWISE SPECIFIED:	MATERIAL	INIT	DATE	**PROPRIETARY AND CONFIDENTIAL**
TOLERANCES (mm): X.XX = ±0.01, X.X = ±0.1, X. = ±0.2, ∠ = ±0.5°		DRAWN Lee	3/25/2010	THE INFORMATION CONTAINED IN THIS DRAWING IS THE SOLE PROPERTY OF **cmi novacast, inc.** ANY REPRODUCTION, WITHOUT THE EXPRESS WRITTEN PERMISSION OF **cmi novacast, inc.**, IS PROHIBITED.
	FINISH	CHECKED		TITLE
WORKMANSHIP: HOLES: ◎ ⊥ // ±.1 SURFACES: ⊥ // ±.1	TREATMENT	MFG		SIZE A / DWG NR **LA 500 PUMP** / REV
DIMENSIONS ARE IN mm INTERPRET GD&T PER ASME Y14.5M-1994	HARDNESS	APPROVED		SCALE / MASS 1257.872 kg / MAT'L VOLUME 153630888.5 mm^3 / SHEET 7 OF 8

cmi novacast inc.

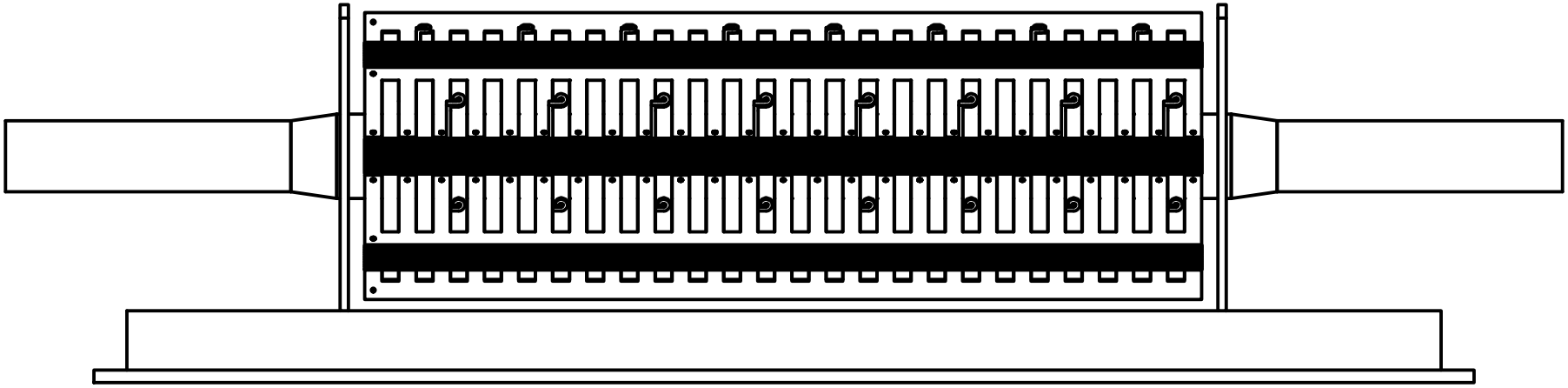

\\server1\data\CAD\INVENTOR\PUMPS\SODIUM PUMPS\LA500\Assembly1.iam

UNLESS OTHERWISE SPECIFIED:	MATERIAL	INIT	DATE
TOLERANCES (mm): X.XX = ±0.01, X.X = ±0.1, X. = ±0.2, ∠ = ±0.5°		DRAWN Lee	3/25/2010
	FINISH	CHECKED	
WORKMANSHIP: HOLES: ◎ ⊥ // ±.1 SURFACES: ⊥ // ±.1	TREATMENT	MFG	
DIMENSIONS ARE IN mm INTERPRET GD&T PER ASME Y14.5M-1994	HARDNESS	APPROVED	

cmi novacast inc.

PROPRIETARY AND CONFIDENTIAL
THE INFORMATION CONTAINED IN THIS DRAWING IS THE SOLE PROPERTY OF **cmi novacast, inc.** ANY REPRODUCTION, WITHOUT THE EXPRESS WRITTEN PERMISSION OF **cmi novacast, inc.**, IS PROHIBITED.

TITLE: FRONT VIEW WITH COVERS REMOVED

SIZE	DWG NR	REV
A	**LA 500 PUMP**	

SCALE	MASS	MAT'L VOLUME	SHEET
	1257.872 kg	153630888.5 mm^3	8 OF 8