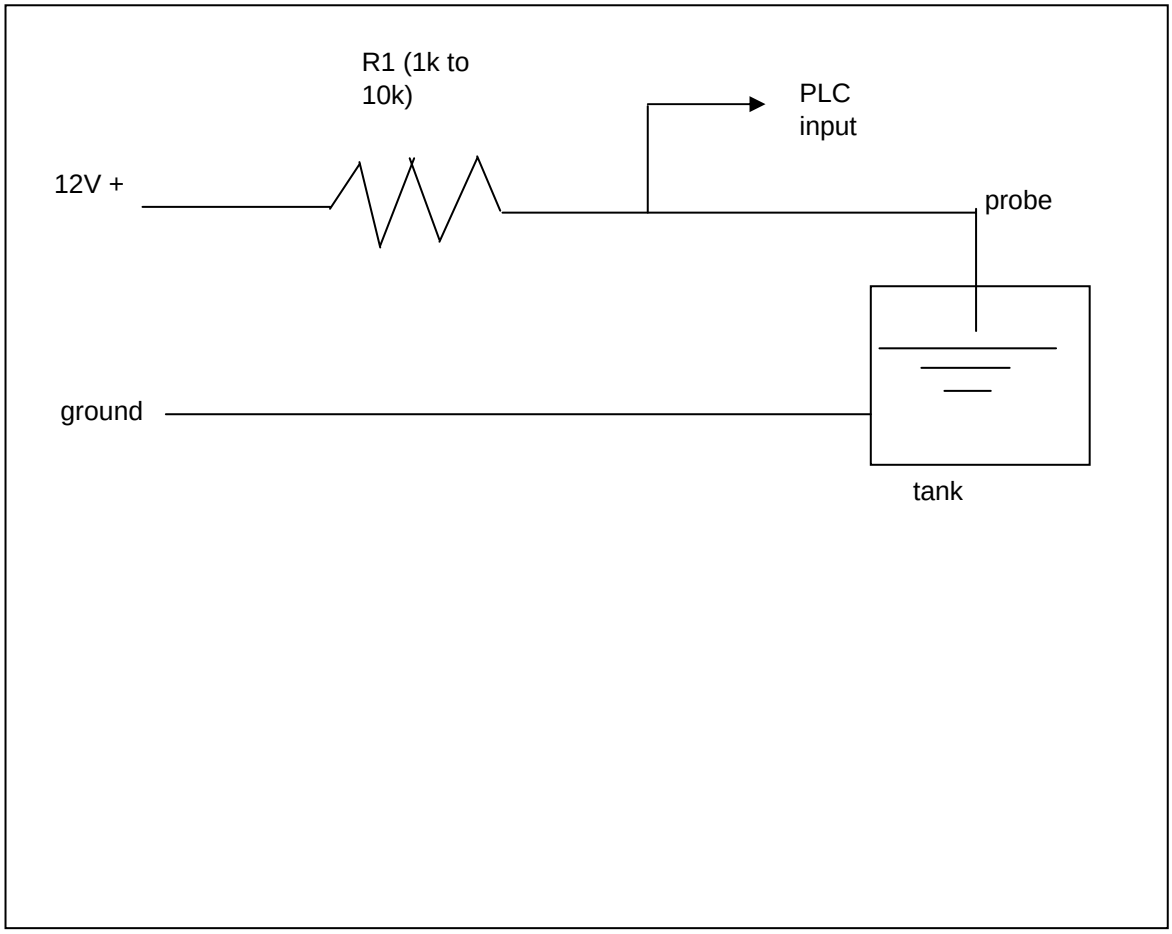
R1 (1k to
10k)
PLC
input
12V +
probe
ground
tank