REV	PART NUMBER
*	

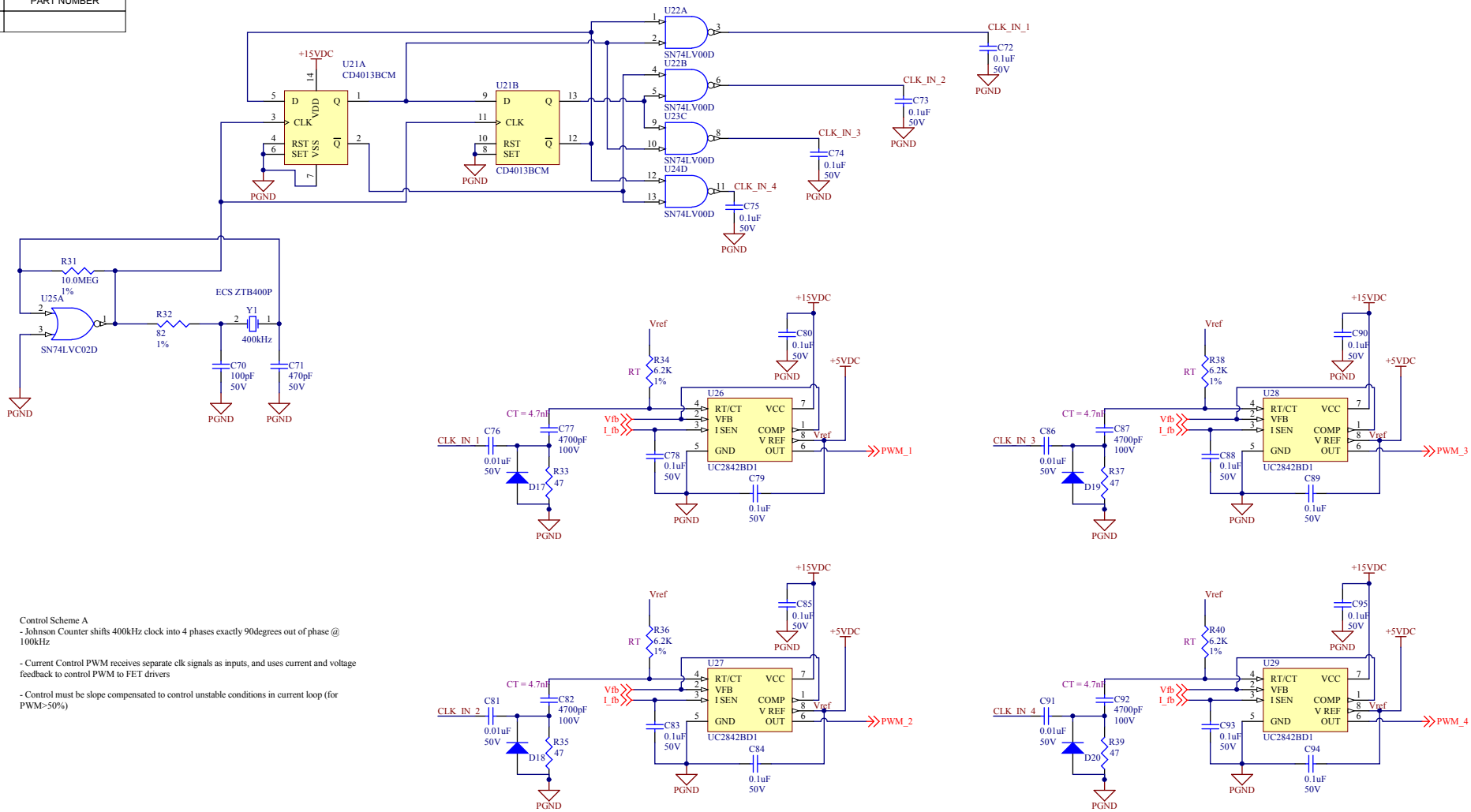

Control Scheme A
- Johnson Counter shifts 400kHz clock into 4 phases exactly 90degrees out of phase @ 100kHz

- Current Control PWM receives separate clk signals as inputs, and uses current and voltage feedback to control PWM to FET drivers

- Control must be slope compensated to control unstable conditions in current loop (for PWM>50%)