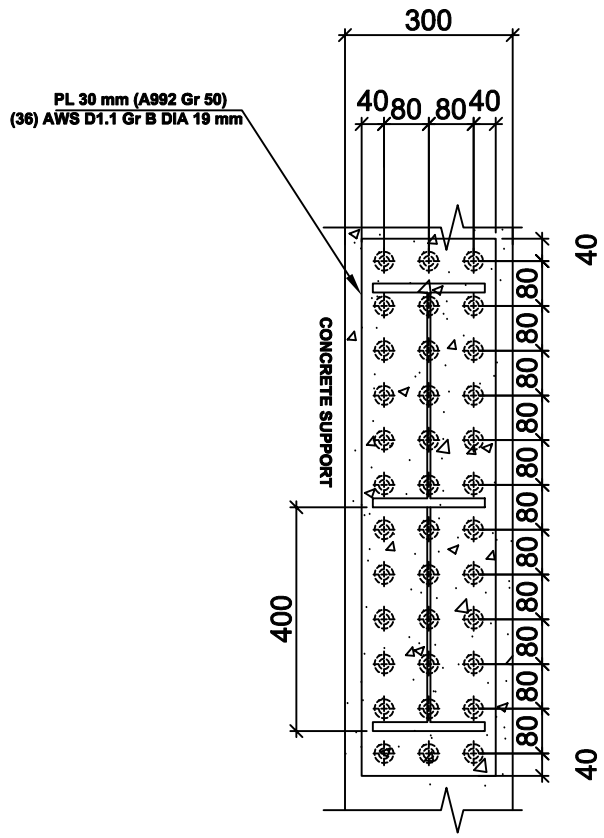

SEC E-E

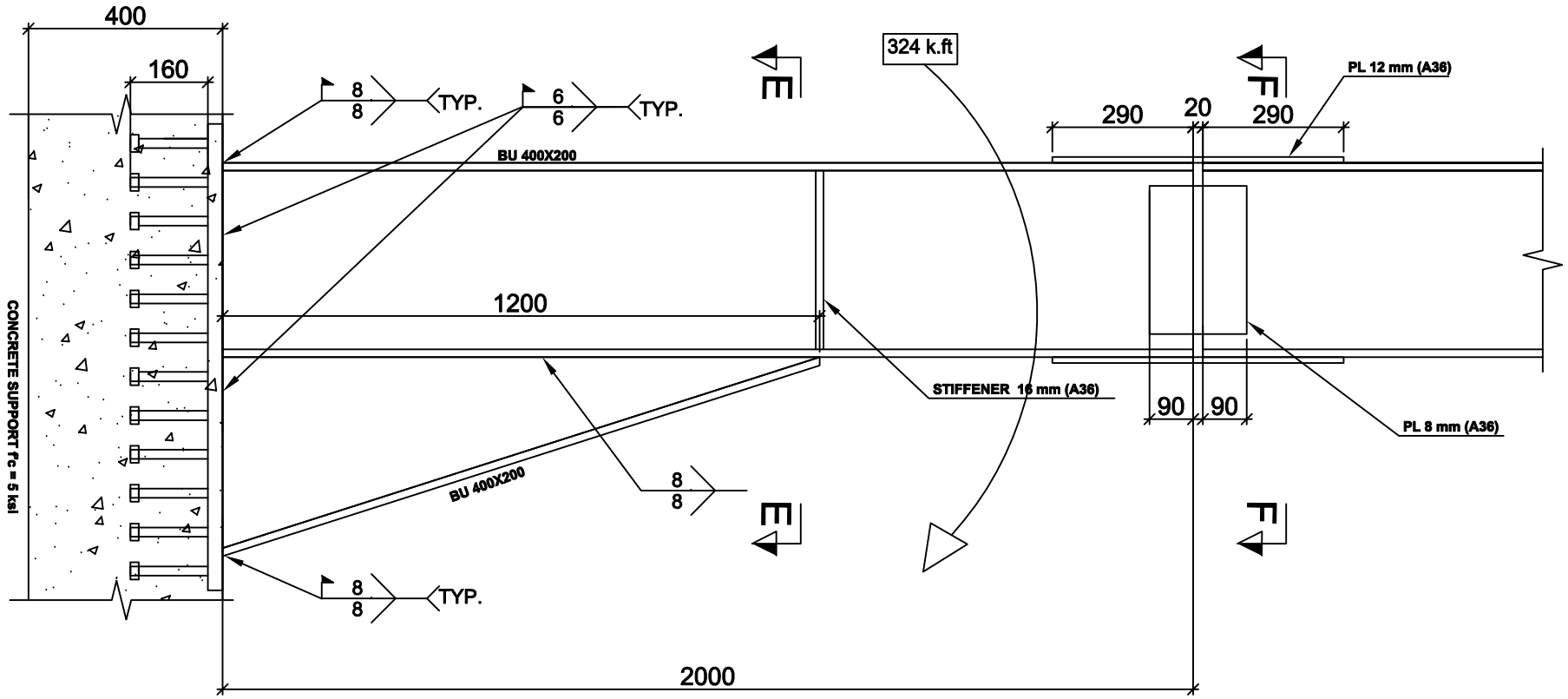

FRONT VIEW

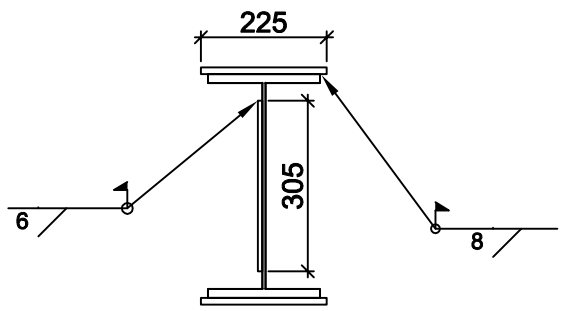

SEC F-F

EMBEDDED PLATE DETAIL (BU400)

DET 10-a

(DIMENSIONS ARE IN mm)