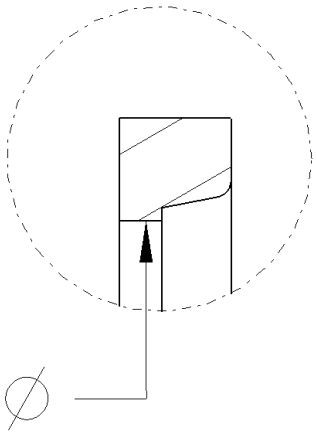

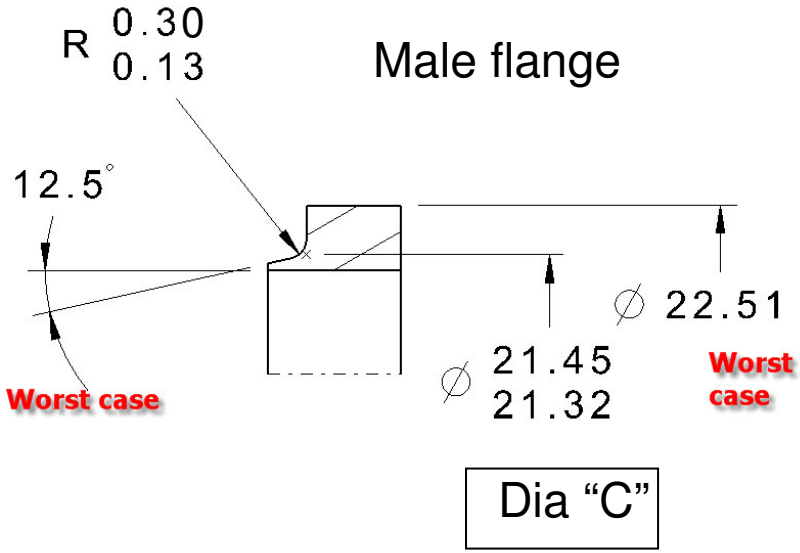

.10mm mentioned in the assembly is the interference thickness when the flanges are manufactured to the worst-case. The 12.5 degree on the male flange is worst-case of the angle. The actual angle dimension is 12±.5°. We cannot change the dimension as this angle is an industry standard for the flange.
The radius and Dia "C" we can change as earlier mentioned.
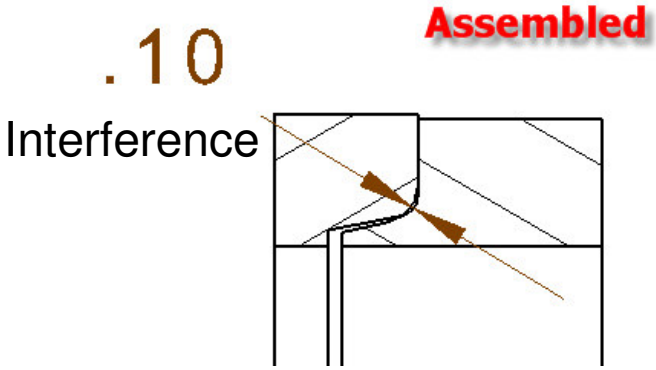
Could you please provide me an example?