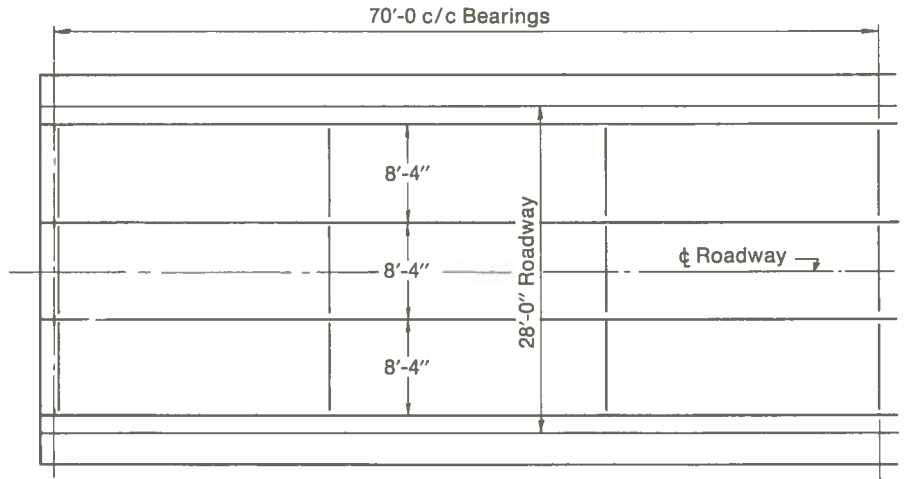

Framing Plan

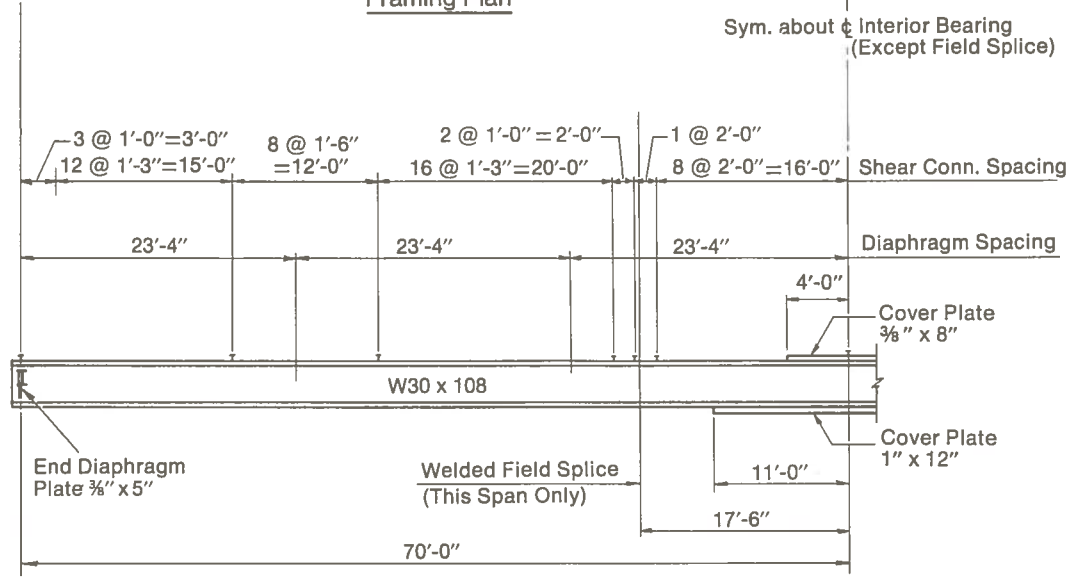

Elevation of Girder

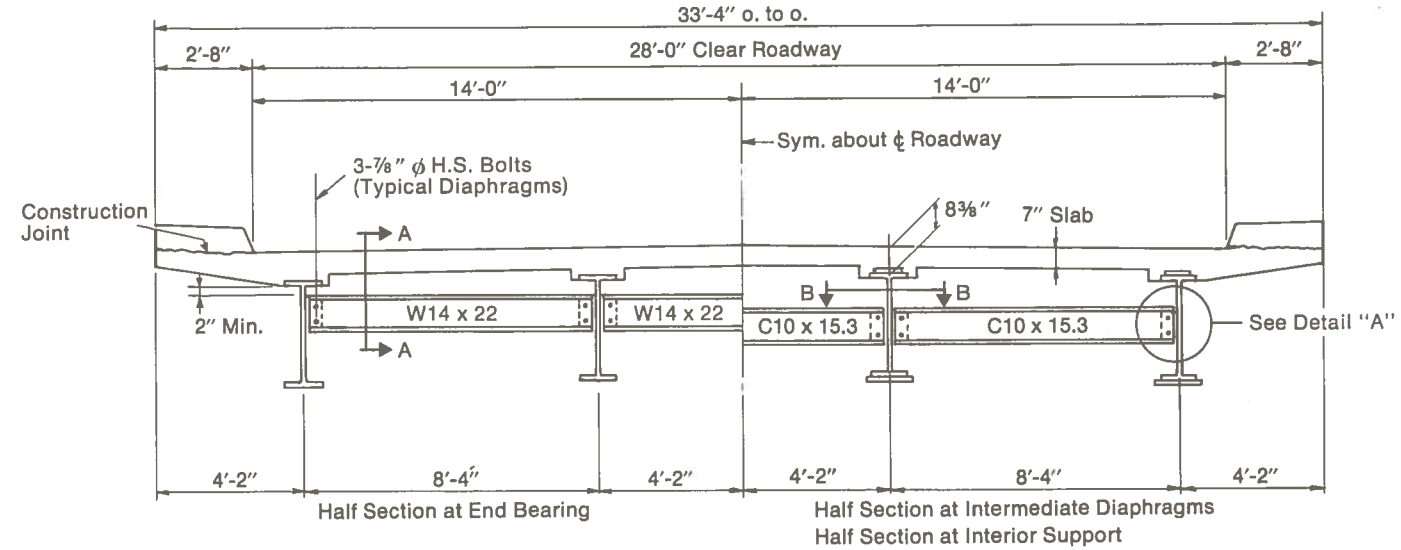

Typical Cross Section

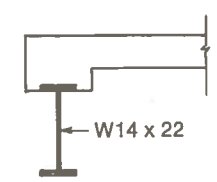

Section A-A

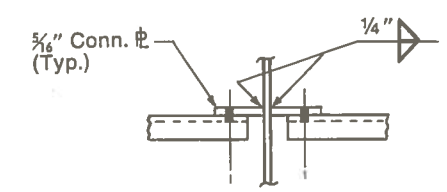

Section B-B

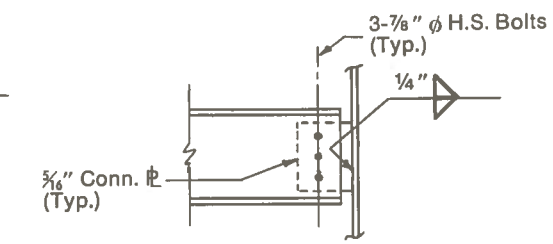

Detail "A"

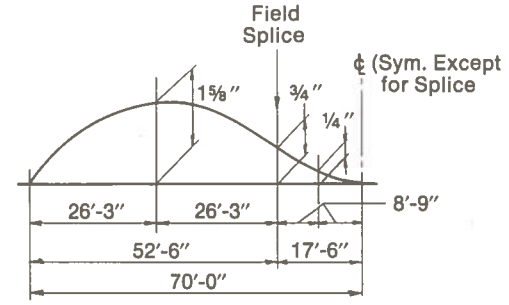

Camber Diagram

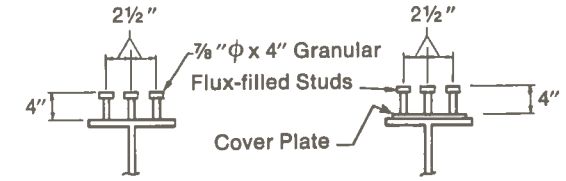

Detail of Shear Connector

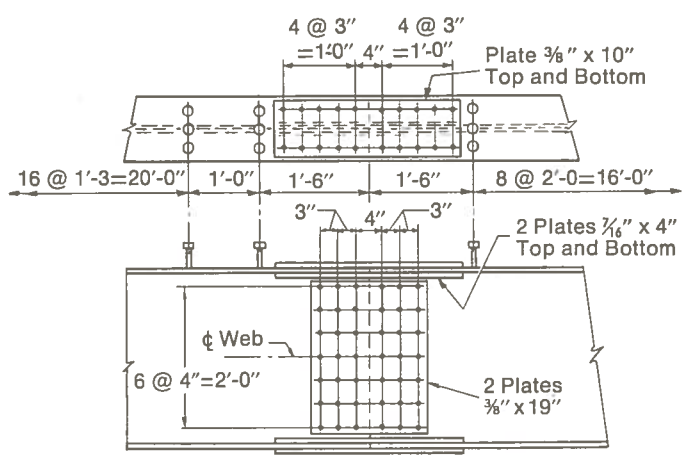

Alternate Bolted Field Splice

All bolts shall be 7/8" ϕ H.S. Bolts

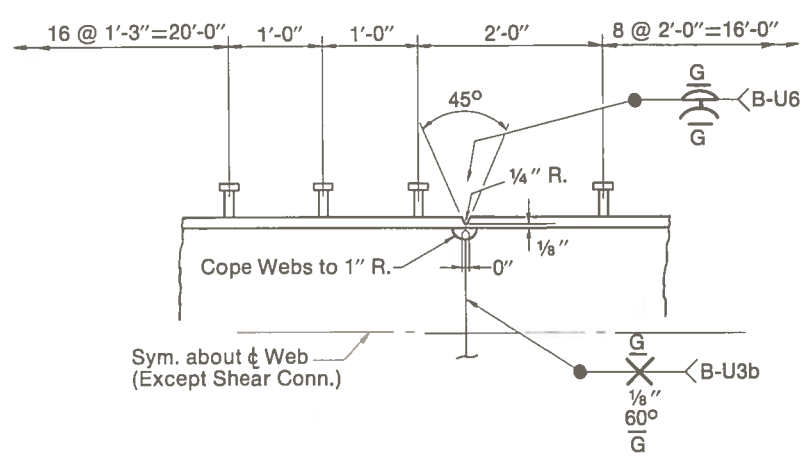

Welded Field Splice

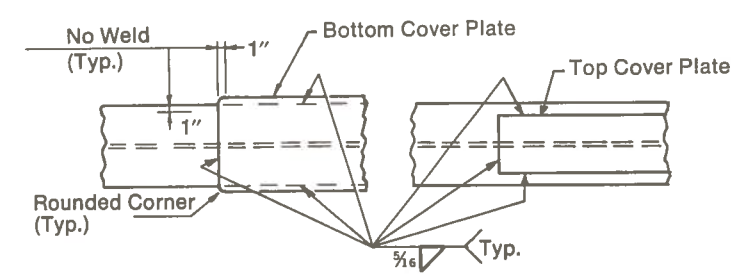

Note:
1. All material ASTM A588, Grade A (USS COR-TEN B)
2. All bolts ASTM A325 Type 3

- Total Wt=69,695 lb
  Wt per sq ft (0.-0. slab)=
  14.9 lbs per sq ft
- Weight does not include bearing shoes, railing or studs.

Composite Design Example
2-Span Continuous Rolled Beams
Load Factor Design

Composite Design Example
2-Span Continuous Rolled Beams
Load Factor Design