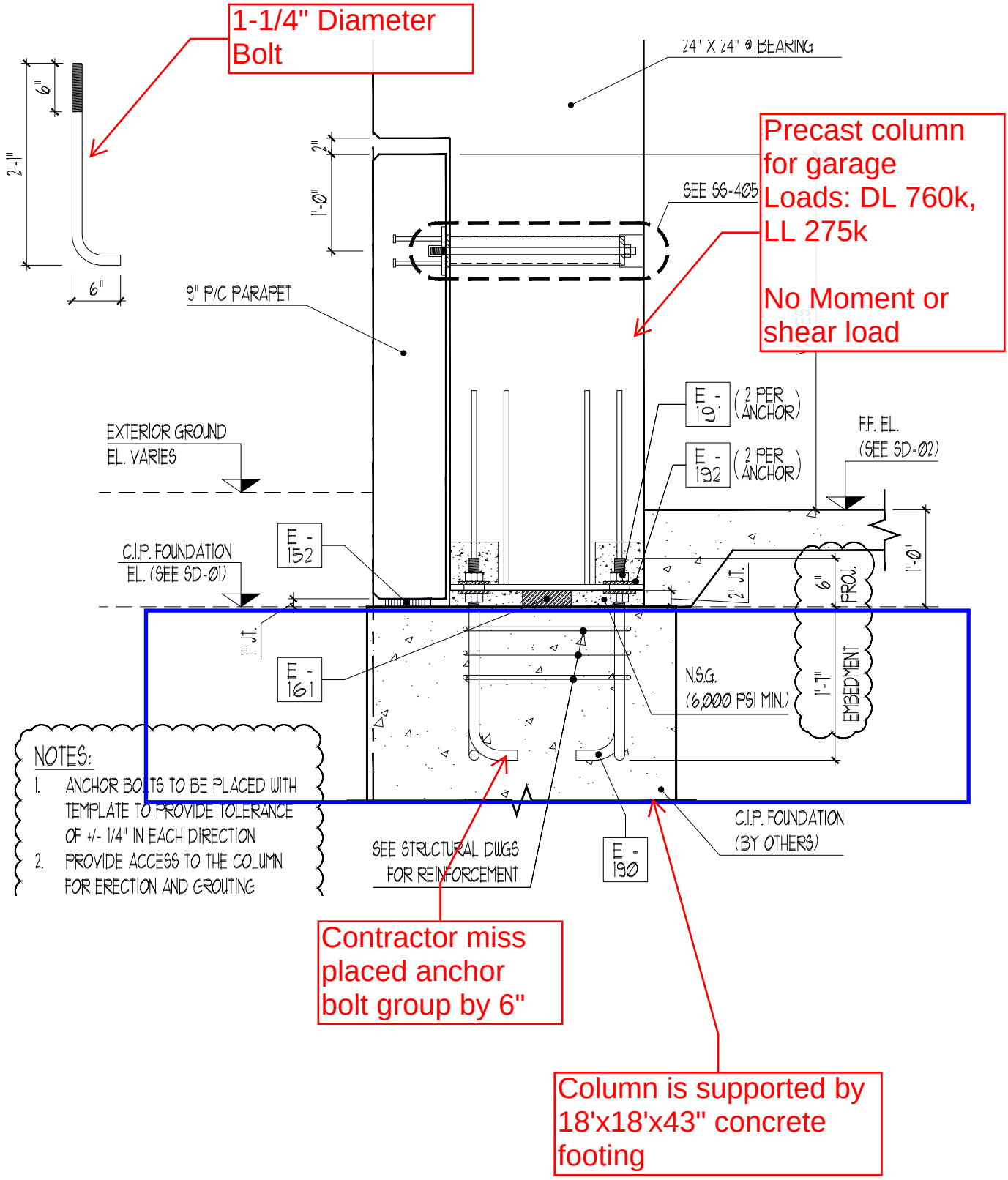
1-1/4" Diameter Bolt
24" X 24" @ BEARING
Precast column for garage Loads: DL 760k, LL 275k
No Moment or shear load
SEE SS-405
9" P/C PARAPET
EXTERIOR GROUND EL. VARIES
C.I.P. FOUNDATION EL. (SEE SD-01)
E - 191 (2 PER ANCHOR)
E - 192 (2 PER ANCHOR)
F.F. EL. (SEE SD-02)
E - 152
E - 161
E - 190
1" JT.
2" JT.
N.S.G. (6,000 PSI MIN.)
EMBEDMENT
PROJ.
SEE STRUCTURAL DWGS FOR REINFORCEMENT
C.I.P. FOUNDATION (BY OTHERS)
NOTES:
1. ANCHOR BOLTS TO BE PLACED WITH TEMPLATE TO PROVIDE TOLERANCE OF +/- 1/4" IN EACH DIRECTION
2. PROVIDE ACCESS TO THE COLUMN FOR ERECTION AND GROUTING
Contractor miss placed anchor bolt group by 6"
Column is supported by 18'x18'x43" concrete footing