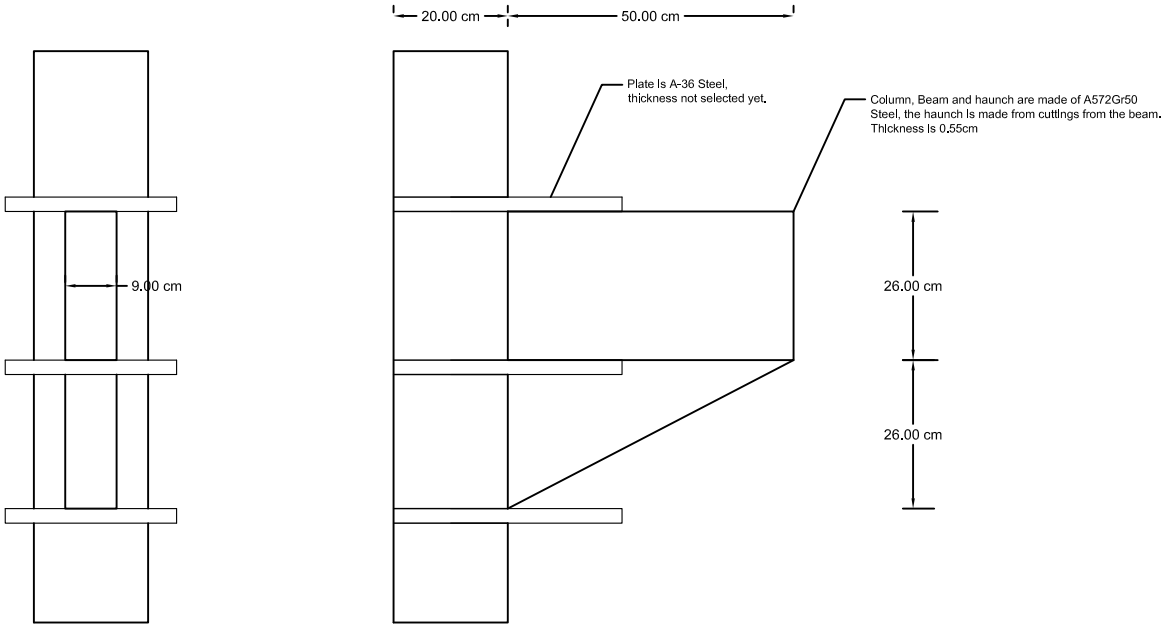
20.00 cm
50.00 cm
Plate Is A-36 Steel,
thickness not selected yet.
Column, Beam and haunch are made of A572Gr50
Steel, the haunch Is made from cuttIngs from the beam.
ThIckness Is 0.55cm
9.00 cm
26.00 cm
26.00 cm

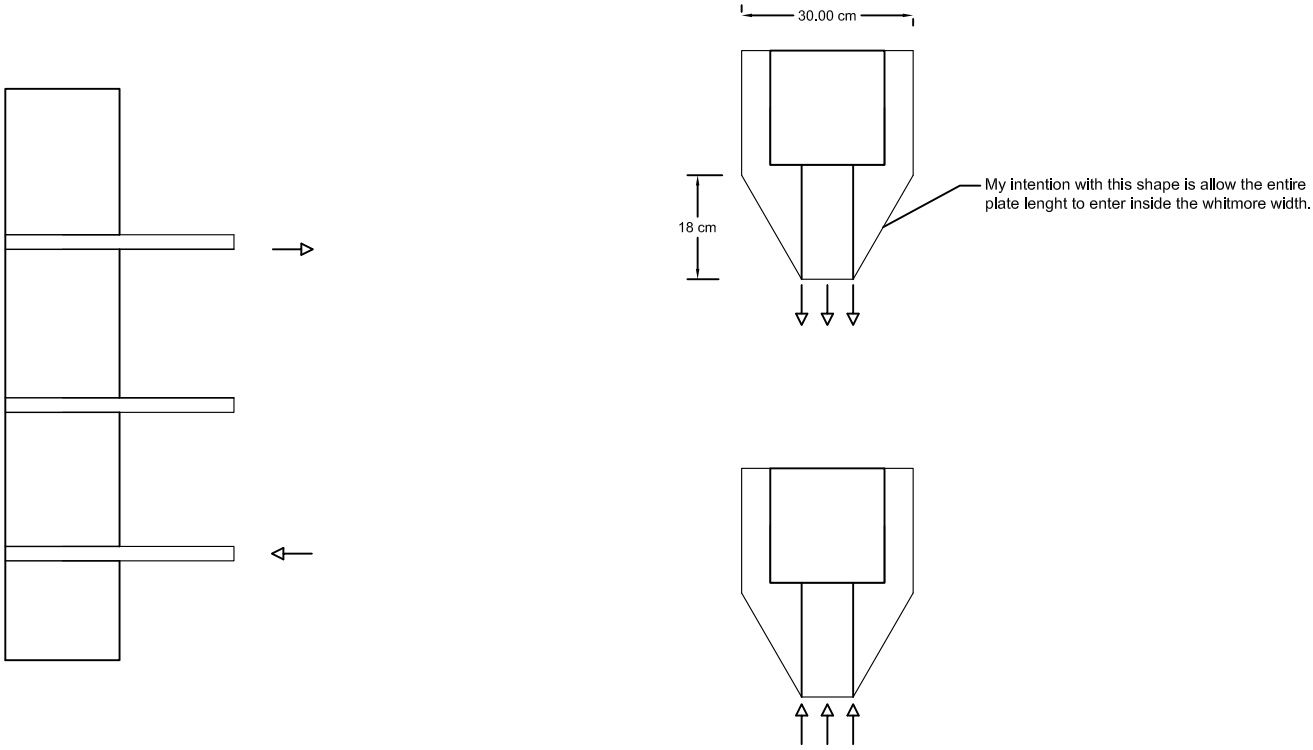
30.00 cm
18 cm
My intention with this shape is allow the entire
plate lenght to enter inside the whitmore width.

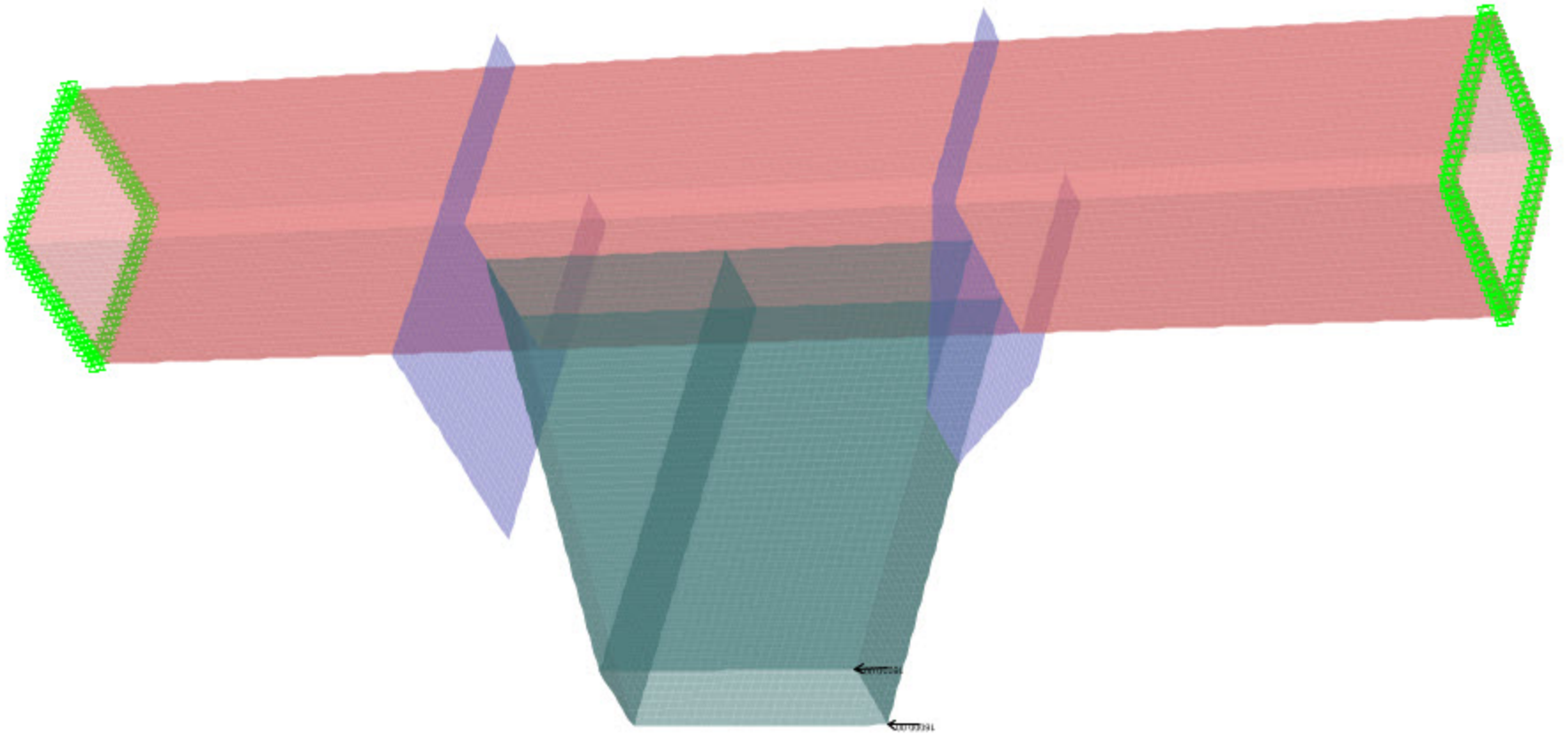

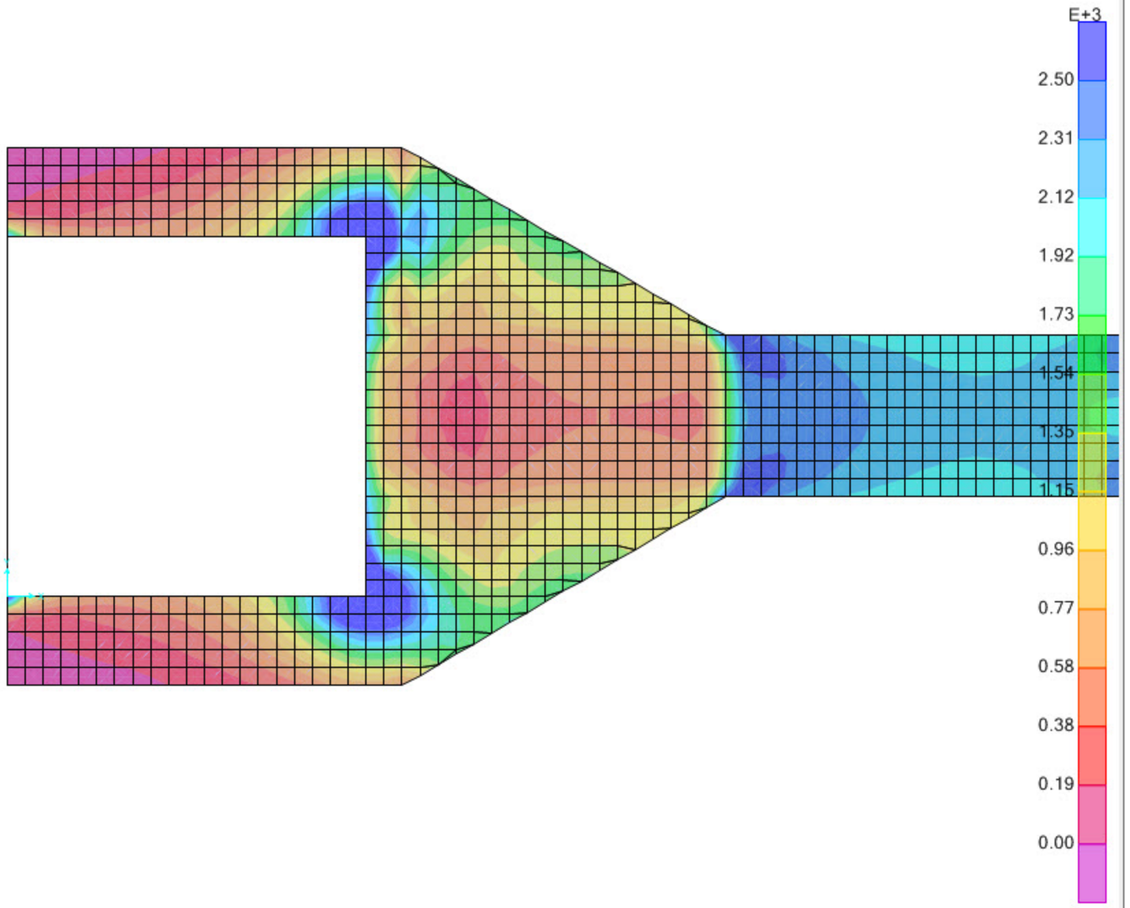
E+3
2.50
2.31
2.12
1.92
1.73
1.54
1.35
1.15
0.96
0.77
0.58
0.38
0.19
0.00

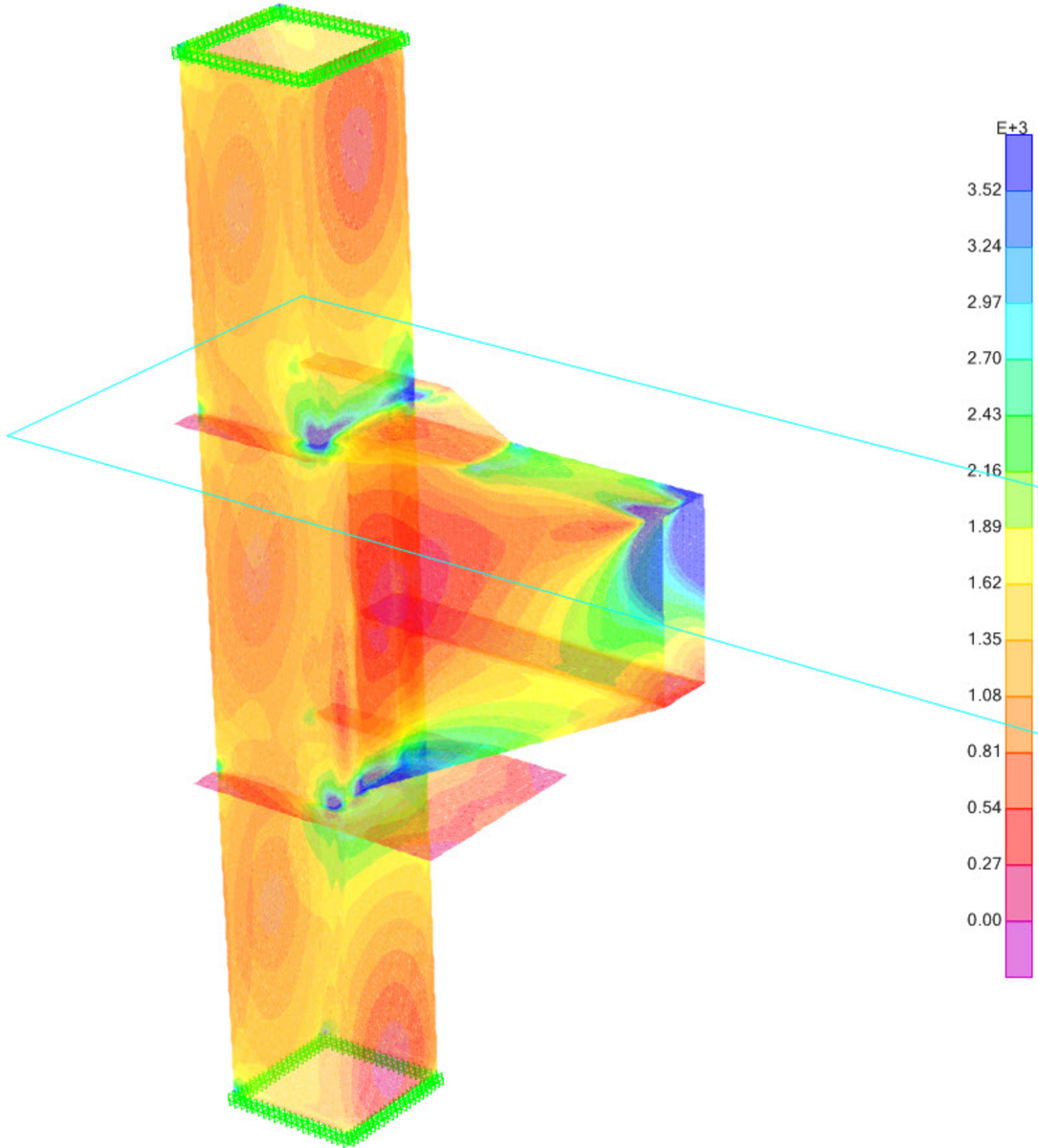
E+3
3.52
3.24
2.97
2.70
2.43
2.16
1.89
1.62
1.35
1.08
0.81
0.54
0.27
0.00

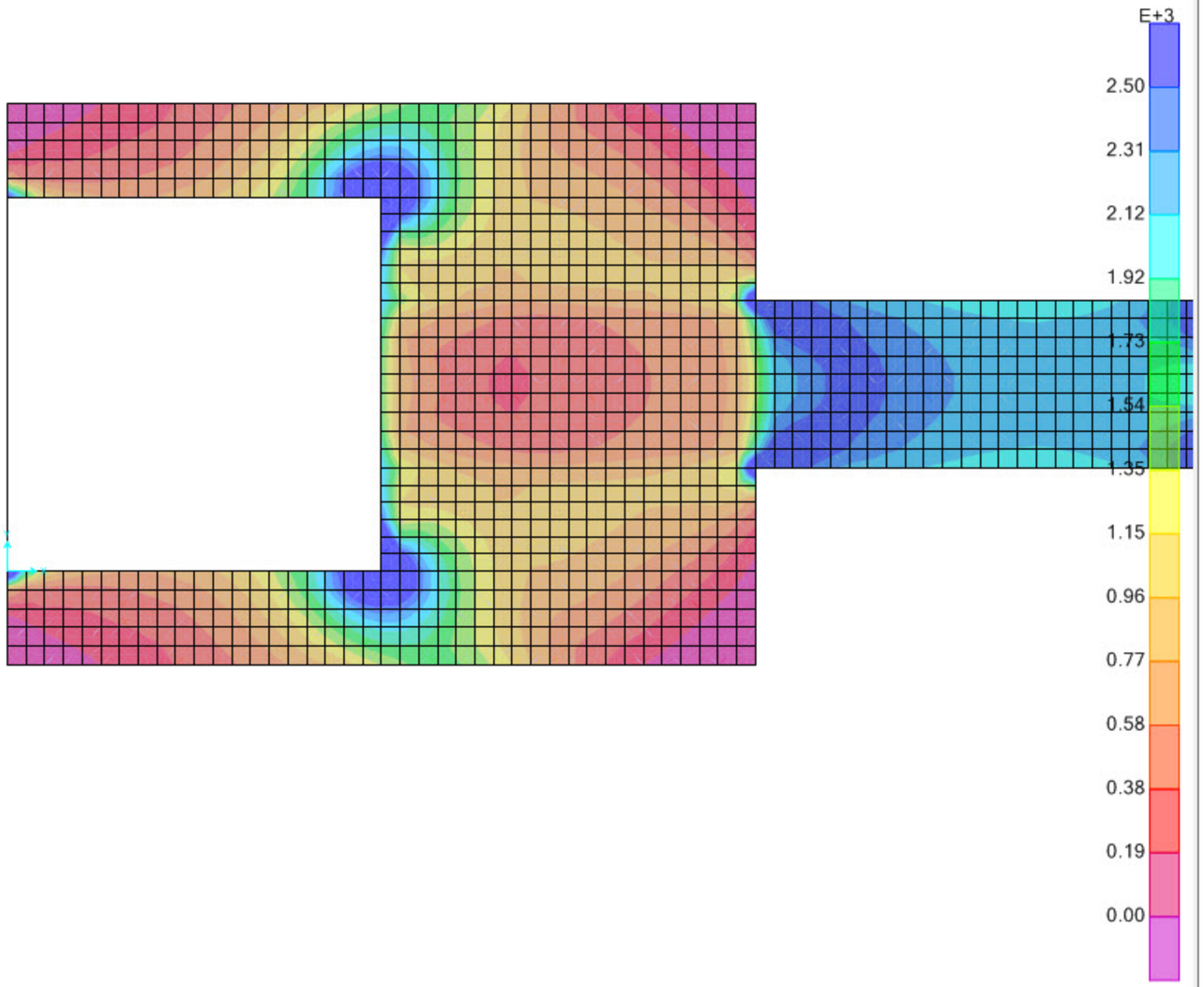
E+3
2.50
2.31
2.12
1.92
1.73
1.54
1.35
1.15
0.96
0.77
0.58
0.38
0.19
0.00

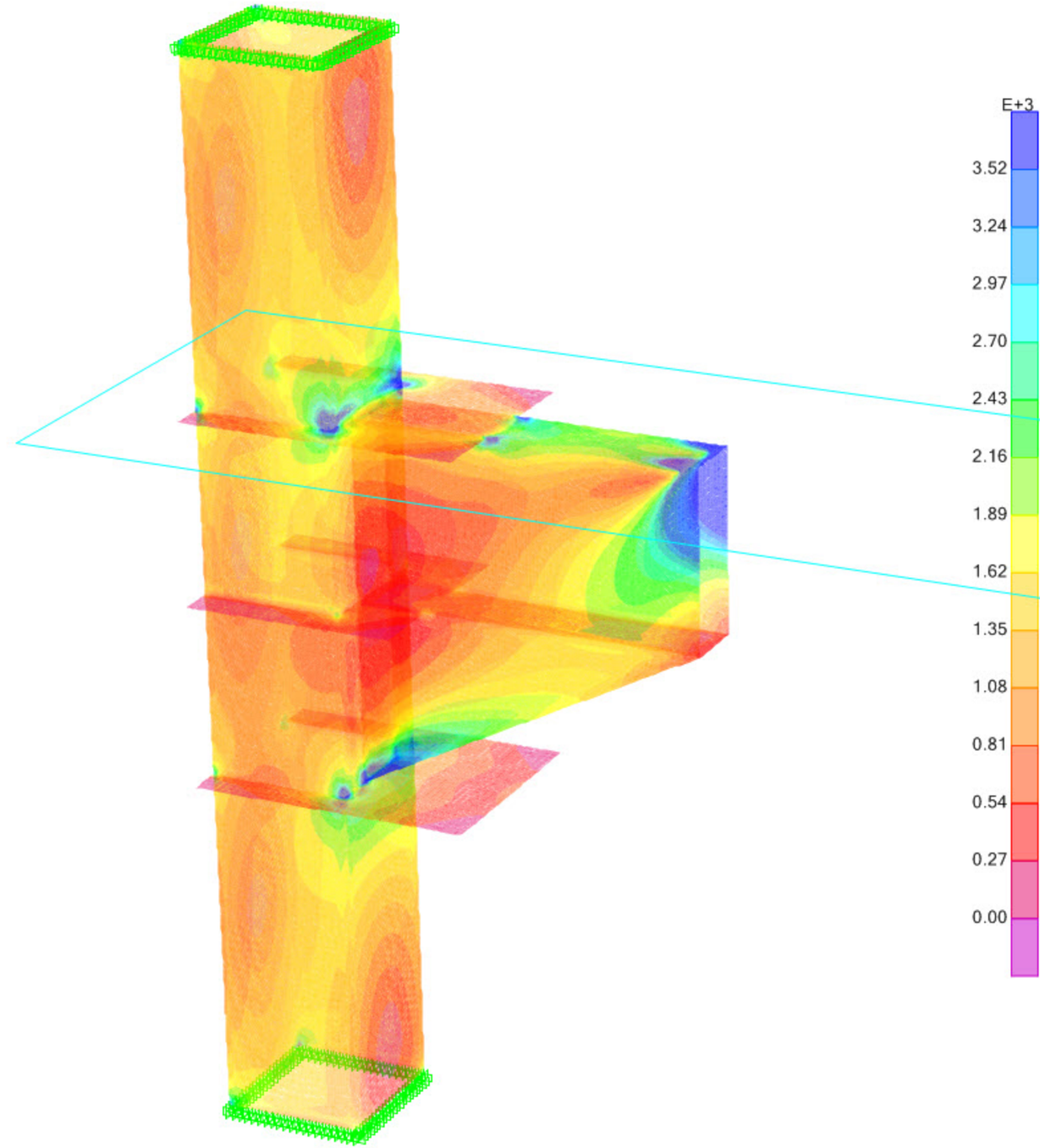
E+3
3.52
3.24
2.97
2.70
2.43
2.16
1.89
1.62
1.35
1.08
0.81
0.54
0.27
0.00