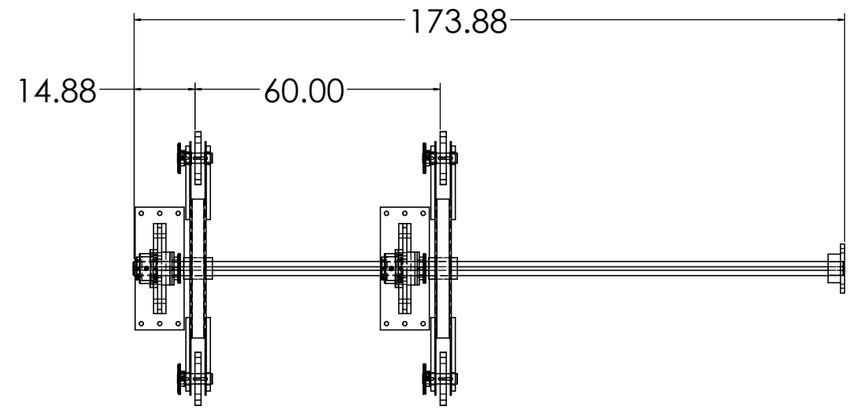


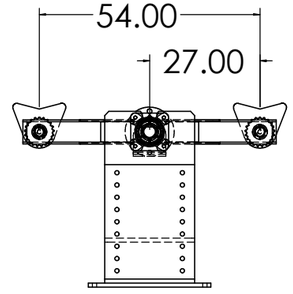


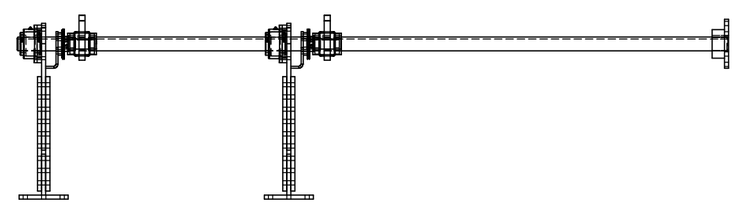

PROPRIETARY AND CONFIDENTIAL
THE INFORMATION CONTAINED IN THIS DRAWING IS THE SOLE PROPERTY OF <INSERT COMPANY NAME HERE>. ANY REPRODUCTION IN PART OR AS A WHOLE WITHOUT THE WRITTEN PERMISSION OF <INSERT COMPANY NAME HERE> IS PROHIBITED.

| | | | | NAME | DATE |
|---|---|---|---|---|---|
| | | UNLESS OTHERWISE SPECIFIED: | | | |
| | | DIMENSIONS ARE IN INCHES | DRAWN | | |
| | | TOLERANCES: | CHECKED | | |
| | | ANGULAR: MACH ± BEND ± | ENG APPR. | | |
| | | TWO PLACE DECIMAL ± | MFG APPR. | | |
| | | THREE PLACE DECIMAL ± | Q.A. | | |
| | | INTERPRET GEOMETRIC TOLERANCING PER: | COMMENTS: | | |
| | | MATERIAL | | | |
| NEXT ASSY | USED ON | FINISH | | | |
| APPLICATION | | | | | |

TITLE:

SIZE | DWG. NO. | REV
E | $tarWheel_3 |
SCALE: 1:10 | WEIGHT: | SHEET 1 OF 1

$tarWheel_3