Busway Systems

Catalog
5600CT9101R03/17

2017

Class 5600

Powerbus™ 100-400 A

I-Line™ Plug-in Busway 225-600 A

I-Line II Busway 800-5000 A

Power-Zone™ Busway

I-Line Plug-in Units

SQUARE D™
by Schneider Electric

SECTION 1: I-LINE™ PRODUCT FEATURES 15

Sandwich Construction 15
Totally Enclosed Housing 15
Compact Size 16
Finish 16
Insulation 16
Plating 16
Dielectric Testing 16
Visi-Tite™ One Bolt Joint 17
EZ Joint Pak™ Connector Assembly 17
Labor Savings 18
Tie Channels 18
Internal Smoke/Gas Barriers 18
Short Circuit Strength 18
Voltage Drop 18
Outdoor Busway 18
Universal Fittings 18
Quality 19
Integral Ground Bus 19

SECTION 2: I-LINE™ CONSTRUCTION 20

Plug-In Busway 225–600 A 20
Plug-In Busway 800–5000 A 21
Indoor Feeder Busway 800–5000 A 22
Outdoor Feeder Busway 800–5000 A 23
Busway Order Entry Checklist 24

SECTION 3: I-LINE™ APPLICATION DATA 25

The Four Types of Busway Runs 25
- Service Entrance Run 25
- Plug-In Type Vertical Riser 25
- Plug-In Type Horizontal Run 26
- Feeder Type Tie Run 26

Service Entrance Runs 27
- Service Heads 27
- Transformer Taps 28
- Bussed Transformer Connections 29
- Phasing 29
- Other Service Entrance Connections 29

Plug-In Busway Horizontal Run 31
- Phasing 31
- Identification 31

Plug-In Risers 32
- Dimensions 32
- Riser Installation and Phasing 33
- Special Manufacturer's Recommendation 33
- Plug-In Units 33
- Hangers 33

Feeder Runs 34
- Busway Through Walls and Floors 34

© 1986–2017 Schneider Electric
All Rights Reserved

SECTION 4: I-LINE™ LAYOUT AND MEASUREMENT 35

Known Information 35

SECTION 5: I-LINE™ INSTALLATION, SPECIAL FEATURES, AND SERVICES 38

Installation Recommendations 38
Painting Installed Busway Systems 38
Hanger Spacing 38
Maintenance Recommendations 39
Special Busway Construction 40
Special Paint 40
Low Current Density Busway 40
Riser Plug-In Busway 40
Splash Resistant Busway 40
Harmonic Busway 40
Seismically Qualified Busway 41
Services 41
Busway Measuring and Layout Service 41
Emergency Service 41
“Missing Link” Program 42
How To Properly Measure Your Missing Link Dimensions 42

SECTION 6: I-LINE™ ELECTRICAL DATA 43

Electrical Data 43
Short Circuit Ratings 43
Impedance Values 45
Voltage Drop Data (60 Hz At Rated Load) 46
Voltage Drop Sample Calculations (60 Hz) 48

SECTION 7: I-LINE™ 225–600 A BUSWAY 49

I-Line™ 225–600 A Busway Catalog Numbering System 49
Straight Lengths 50
Cross Section 50
Joint Detail 51
Cable Tap Boxes (Plug-In) 51
Cable Tap Boxes (End) 52
Tees 53
Elbows 53
Expansion Fitting 54
Unfused Reducer 54
Flanged End Cutout and Drilling Template 55
Flanged End Details 55
Flatwise Hanger 56
Edgewise Hanger 56
Sway Brace Collar 57
Hanger (Vertical Fixed) 58
Hanger (Vertical Spring) 59
Hanger (Horizontal Seismic) 60
End Closure 61
Wall and Floor Flange 61
Required Wall and Floor Openings 62

© 1986–2017 Schneider Electric
All Rights Reserved

SECTION 8: I-LINE™ 800–5000 A BUSWAY 63

I-Line™ 800–5000 Busway Catalog Numbering System 63
Cross Sections—Plug-In and Indoor Feeder Lengths 64
Cross Sections—Fittings and All Outdoor Feeder 64
Straight Lengths—Feeder 65
Straight Lengths—Plug-In (Indoor Only) 66
Flanges 67
Legacy Qwik Flange (Indoor Only) 68
New Qwik Flange (Indoor Only) 70
Flanged End 72
Detail of Phase Bussing Connections in a Switchboard 76
Elbows 77
Offset Elbows 78
Double Elbows 79
Cable Tap Box (End) 80
Cable Tap Box (Center) 82
Cable Tap Box (Bolt On) 83
Unfused Reducer (Indoor Only) 83
Expansion Fitting (Indoor Only) 84
Tees 84
Service Head Flatwise 85
Transformer Tap (One 3Ø Transformer) 85
Service Head Vertical 86
Transformer Tap (Three 1Ø Transformers) 87
Bussed Transformer Connections 88
Straight Length with Flanged Collar 89
Roof Flange Kit 89
Adapter (Indoor Only)—I-Line to I-Line II 90
Phase Transition (Indoor Only) 90
Hanger (Horizontal Flatwise) 91
Hanger (Horizontal Edgewise) 92
Sway Brace Collar 93
Hanger (Vertical Fixed) 93
Hanger (Vertical Spring) 94
Hanger (Horizontal Seismic) 95
Wall and Floor Flange 96
End Closure (Indoor Only) 98

SECTION 9: I-LINE™ PLUG-IN UNITS—BUS PLUGS 99

Plug-In Catalog Numbering System 99
Type of Unit 99
Compatibility 100
Fusible 100
Circuit Breakers 100
Circuit Breakers with Communications 101
Plug-In Device Mounting 102
Interlock 102
Grounding 102
Splash Resistant Feature (Optional) 102
Special Purpose Plug-In Devices 103
Interrupting Capacity of Fusible Switch Plug-In Units 104
Interrupting Capacity of Circuit Breaker Plug-In Units 104
Required Clearances for Plug-In Unit Mounting 105
Vertical Mounting 106
Fusible Units 106
Circuit Breaker Units 106
Fusible Switch Plug-In Units—30–100 A (Type “PQ”) 106

© 1986–2017 Schneider Electric
All Rights Reserved

Fusible Switch Plug-In Unit—200 A (Type “PQ”) 107
Fusible Switch Plug-In Unit—200 A (Type “PS”) 108
Fusible Switch Plug-In Unit—400 A and 600 A (Type “PBQ”) 109
Fusible Switch Plug-In Unit—400 A (Type “PBQA”) 110
Fusible Switch Bolt-On Units—800–1200 A (Type “PTQ”) 111
Circuit Breaker Plug-In Units—15–250 A 113
Circuit Breaker Plug-In Units—250–600 A 114
Circuit Breaker Plug-In Units with Micrologic™ Electronic Trip Units and Communication 115
H-and J-Frame Circuit Breaker Plug-In Units with Communications Box 115
L-Frame Circuit Breaker Plug-In Units with Communications Box 117
Circuit Breaker Bolt-On Units—250–1200 A 118
Circuit Breaker Bolt-On Units—600–1600 A 120
Surge Protective Devices 122
Combination Fusible Switch and Starter / Lighting Contactor / Contactor 123
Combination Circuit Breaker and Starter—Contactor 124
Ground Detector and Neutralizer 125

SECTION 10: POWERBUS™ PLUG-IN BUSWAY 126

Product Descriptions 126
Powerbus Busway System 126
General Information 126
Busbar Configuration 126
Maintenance-Free Joint 127
Physical and Electrical Data 127
Catalog Numbering System 129
Dimensions—Straight Lengths, Fittings, and Accessories 130
Joint Detail 131
Cross Sections 131
Elbow Left 132
Elbow Right 132
Cross 132
Tap Box / Power Feed Unit 133
Tap Box / Power Feed Unit with Metering and Communication 134
Powerbus Plug-In Units 136
General Information 136
Ready-to-Assemble Plug-In Units 136
Factory-Assembled Plug-In Units 136
Catalog Numbering System 137
Plug-In Units (Ready-to-Assemble) 139
Plug-In Units (Factory-Assembled) 140
Non-Locking Devices 142
Locking Devices 142
Gateway Unit 142
Plug-In Unit Accessories 143
IP54 Kit (Water-Tight Boot for Circuit Breaker Opening) 143
Floor Operator Attachment 143
Plug-In Opening Cover 143
Additional Accessories 143

SECTION 11: POWER-ZONE™ METAL-ENCLOSED BUSWAY 144

General 144
Power-Zone™ Bus Standard Construction 148
Bus Supports 148
Layout and Instructions 149
Fitting Description 149

© 1986–2017 Schneider Electric
All Rights Reserved

Transformer Connection 149
Generator Connection 149
Bushing Box (Weatherhead) 149
Ground Bus 149
Wall Entrance Seal 149
Equipment Entrance Seal 149
Expansion Fittings 149
Housing Bellows (Misalignment) Collar 149
Flanged Ends 150
Cable Tap Box 150
Supporting Steel (Hangers) 150
Hazardous Locations 150
General Layout Instruction 150
Bus Footage 150
Weatherproof Bus 150
Typical Layout 151

© 1986–2017 Schneider Electric
All Rights Reserved

List of Figures

Figure 1: Ventilated Housing (left) and I-Line II Totally Enclosed Housing 15
Figure 2: Compact Design 16
Figure 3: Visi-Tite Bolt 17
Figure 4: EZ Joint Pak Connector Assembly 17
Figure 5: Reduction in Installation Cost 18
Figure 6: I-Line II Busway Cross Section 19
Figure 7: Plug-In Busway 225–600 A 20
Figure 8: Plug-In Busway 800–5000 A 21
Figure 9: Indoor Feeder Busway 800–5000 A 22
Figure 10: Outdoor Feeder Busway 800–5000 A 23
Figure 11: Typical Service Entrance Run (Utility Transformer to a Switchboard) 25
Figure 12: Plug-In Riser Fed by Switchboard 25
Figure 13: Plug-In Riser Fed by Switchboard through a Tee 26
Figure 14: Feeder Run between Two Switchboards 26
Figure 15: Typical Connection of Transformer to Busway using Cables 27
Figure 16: Typical Vertical Service Head Application 27
Figure 17: Vertical Service Head Penetrating a Roof 28
Figure 18: Transformer Tap for One Three-Phase Transformer 28
Figure 19: Transformer Tap for Three Single-phase Transformer 28
Figure 20: Information Needed for Bussed Transformer Connection (Throat Type) 29
Figure 21: Information Needed for Bussed Transformer Connection (Pad-Mounted Type) 30
Figure 22: Measurements Needed for a Typical Plug-In Type Run 31
Figure 23: Typical Information Needed for Riser 32
Figure 24: Typical Layout—800 A Rise 32
Figure 25: Correct Orientation of Riser Busway 33
Figure 26: Waterproof Curb Recommended at Floor Opening 33
Figure 27: Measurements Needed for Feeder Type Run 34
Figure 28: Joint Accessibility Requirements 34
Figure 29: Physical Size of Busway Housing 35
Figure 30: Plan View Switchboard, MCC, and Obstructions 36
Figure 31: Proposed Busway Layout 37
Figure 32: General Danger Safety Label 39
Figure 33: Missing Link Dimensions 42
Figure 34: I-Line 225–600 A Busway Catalog Numbering System 49
Figure 35: Straight Lengths Dimensions 50
Figure 36: Joint Detail 51
Figure 37: Cable Tap Boxes (Plug-In) 51
Figure 38: Cable Tap Boxes (End) 52
Figure 39: Tees 53
Figure 40: Top Inside Elbow: Catalog No. Suffix–LTI 53
Figure 41: Top Outside Elbow: Catalog Number Suffix–LTO 53
Figure 42: Front Inside Elbow: Catalog Number Suffix–LFI 53
Figure 43: Front Outside Elbow: Catalog Number Suffix–LFO 53
Figure 44: Catalog Number Suffix–EJ Dimensions 54
Figure 45: Unfused Reducer Dimensions 54
Figure 46: Catalog Number Suffix–FES 12 (Slot End) / FEB 12 (Bolt End) 55

© 1986–2017 Schneider Electric
All Rights Reserved

Figure 47: Flanged End Cutout Dimensions 55
Figure 48: Flanged End Dimensions 55
Figure 49: Flanged End Dimensions 56
Figure 50: Flatwise Hanger 56
Figure 51: Edgewise Hanger 56
Figure 52: Edgewise Hanger Dimensions 57
Figure 53: Catalog Number HP-1-SBC Dimensions 57
Figure 54: Vertical Fixed Hanger Dimensions 58
Figure 55: Hanger (Vertical Spring) Dimensions 59
Figure 56: Hanger (Horizontal Seismic) Dimensions 60
Figure 57: End Closure Dimensions 61
Figure 58: Wall and Floor Flange Dimensions 61
Figure 59: Required Wall and Floor Openings 62
Figure 60: I-Line Busway Catalog Numbering System 63
Figure 61: Cross Sections—Plug-In and Indoor Feeder Lengths Dimensions .. 64
Figure 62: Cross Sections—Fittings and All Outdoor Feeder Dimensions 64
Figure 63: Straight Lengths—Feeder Dimensions 65
Figure 64: Straight Lengths—Plug-In (Indoor Only) Dimensions 66
Figure 65: Qwik Flange 67
Figure 66: Flanged End 67
Figure 67: Legacy Qwik Flange (Indoor Only) Dimensions 68
Figure 68: Legacy Aluminum and Copper Qwik Flange Dimensions 69
Figure 69: Legacy Qwik Flange Dimensions 69
Figure 70: New Qwik Flange (Indoor Only) Dimensions 70
Figure 71: New Aluminum and Copper Qwik Flange (Indoor Only) Dimensions 71
Figure 72: New Qwik Flange Dimensions 71
Figure 73: Flanged End: Catalog Number Suffix–10FEB Dimensions 72
Figure 74: Flanged Collar and Cutout Dimensions 74
Figure 75: Flanged End-Flanged Collar Hole Location and Spacing 75
Figure 76: Switchboard Phase Bussing Connections 76
Figure 77: Elbows 77
Figure 78: Offset Elbows 78
Figure 79: Double Elbows 79
Figure 80: Indoor Catalog Number Suffix–ETBMB 80
Figure 81: Outdoor Catalog Number Suffix–ETBSEW (Edgewise) or ETBS (Flatwise) 81
Figure 82: Catalog Number Suffix–CTB 82
Figure 83: Cable Tap Box (Bolt On) 83
Figure 84: Unfused Reducer (Indoor Only) 83
Figure 85: Catalog Number Suffix—EJ 84
Figure 86: Tees 84
Figure 87: Service Head Flatwise 85
Figure 88: Transformer Tap (One 3Ø Transformer) 85
Figure 89: Catalog Number Suffix—29SV 86
Figure 90: Catalog Number Suffix—TTF 87
Figure 91: Catalog Number Suffix—66 FCS37B29 89
Figure 92: Roof Flange Kit 89
Figure 93: Adapter (Indoor Only) 90
Figure 94: Phase Transition (Indoor Only) 90
Figure 95: Phase Transition X-Section 91
Figure 96: Hanger (Horizontal Flatwise) 91
Figure 97: Hanger (Horizontal Flatwise) Dimensions 92
Figure 98: Hanger Hold-Down Clips 92
Figure 99: Hanger (Horizontal Edgewise) 92

© 1986–2017 Schneider Electric
All Rights Reserved

Figure 100: Catalog Number HP-1-SBC 93
Figure 101: Hanger (Vertical Fixed) 93
Figure 102: Hanger (Vertical Spring) 94
Figure 103: Hanger (Horizontal Seismic) 95
Figure 104: Four-Piece Closing Plate for Finished Look 96
Figure 105: Required Wall / Floor Opening 97
Figure 106: End Closure (Indoor Only) 98
Figure 107: Fusible Unit 100
Figure 108: Standard Molded Case Circuit Breaker 100
Figure 109: Plug-In Device Mounting 102
Figure 110: Interlock 102
Figure 111: Grounding Spring 102
Figure 112: Fusible Switch Plug-In Units 104
Figure 113: Required Clearances for Plug-In Units 105
Figure 114: Fusible Switch Plug-In Units—30–100 A (Type “PQ”) 106
Figure 115: Fusible Switch Plug-In Unit—200 A (Type “PQ”) 107
Figure 116: Fusible Switch Plug-In Unit—200 A (Type “PS”) 108
Figure 117: Fusible Switch Plug-In Unit—400 A and 600 A (Type “PBQ”) 109
Figure 118: Fusible Switch Plug-In Unit—400 A (Type “PBQA”) 110
Figure 119: Fusible Switch Bolt-On Units (Horizontally Mounted) 111
Figure 120: Fusible Switch Bolt-On Units (Vertically Mounted) 111
Figure 121: Circuit Breaker Plug-In Units—15–250 A 113
Figure 122: Circuit Breaker Plug-In Units—250–600 A 114
Figure 123: H- and J-Frame Plug-In Unit with Communications Box Dimensions 116
Figure 124: L-Frame Plug-In Unit with Communications Box Dimensions 117
Figure 125: Circuit Breaker Bolt-On Units (Horizontally Mounted)—250–1200 A 118
Figure 126: Circuit Breaker Bolt-On Units (Vertically Mounted)—250–1200 A . 119
Figure 127: Circuit Breaker Bolt-On Units (Horizontally Mounted)—600–1600 A 120
Figure 128: Circuit Breaker Bolt-On Units (Vertically Mounted)—600–1600 A .. 121
Figure 129: Surge Protective Devices-Dimensions, Required Mounting Clearance 122
Figure 130: Busbar Configuration 129
Figure 131: Four-Foot Straight Lengths—Enhanced Plug-In Offer 130
Figure 132: Ten-Foot Straight Lengths—Enhanced Plug-In Offer 130
Figure 133: Busbar Configuration Table 138
Figure 134: Receptacle/Circuit Breaker Type Configuration 138
Figure 135: Standard Construction Installation 145
Figure 136: Bus Supports 148
Figure 137: Typical Layout Example 151

© 1986–2017 Schneider Electric
All Rights Reserved

List of Tables

Table 1: Short Circuit Ratings: UL 3-Cycle Test (kA, RMS Symmetrical) 43
Table 2: Short Circuit Ratings: 6-Cycle and 30-Cycle Tests (kA, RMS Symmetrical) 43
Table 3: Short Circuit Ratings: KA, RMS Symmetrical (Series Connected with a Fuse) 44
Table 4: I-Line Short Circuit Ratings: KA, RMS Symmetrical (Series Connected with a Breaker) 44
Table 5: Line-to-Neutral (Milliohms Per 100 Feet) 45
Table 6: Resistance Values for Aluminum Integral Ground Bus 45
Table 7: Power Factor–Average Phase Line-To-Line Voltage Drop in Volts Per 100 ft (3048 cm) 46
Table 8: Aluminum Busway–Average Phase Line-to-Line Voltage Drop in Volts Per 100 ft (3048 cm) 46
Table 9: Cooper Busway–Average Phase Line-to-Line Voltage Drop in Volts Per 100 ft (3048 cm) 47
Table 10: Cross-Section–Aluminum Content and Weight 50
Table 11: Cross-Section–Copper Content and Weight 50
Table 12: Cable Tap Boxes (Plug-In)—Dimensions and Other Specifications . 51
Table 13: Cable Tap Boxes (End)—Dimensions and Other Specifications 52
Table 14: Tees–Application Data 53
Table 15: Expansion Fitting–Application Data 54
Table 16: Unfused Reducer–Catalog Number Suffix 54
Table 17: Flanged End–Cutout Dimensions 55
Table 18: Flanged End–Dimensions 55
Table 19: Hanger (Horizontal Flatwise)–Application Data 56
Table 20: Hanger (Horizontal Edgewise)–Application Data 56
Table 21: Hanger (Vertical Fixed)—Dimensions and Catalog Numbers 58
Table 22: Hanger (Vertical Spring)—Dimensions and Catalog Numbers 59
Table 23: Seismic Hanger—Dimensions 60
Table 24: End Closure–Dimensions and Catalog Number 61
Table 25: Wall and Floor Flange–Application Data 61
Table 26: Measurements of Required Wall and Floor Openings 62
Table 27: Cross-Sections–Aluminum Content and Weight 64
Table 28: Cross-Sections–Copper Content and Weight 65
Table 29: Straight Lengths—Catalog No. Suffix 66
Table 30: Legacy Qwik Flange–Catalog Number Suffix -QF 68
Table 31: Legacy Aluminum Qwik Flange–Application Data 69
Table 32: Legacy Copper Qwik Flange–Application Data 69
Table 33: New Qwik Flange–Catalog Number Suffix -NQF 70
Table 34: Aluminum New Qwik Flange–Application Data 71
Table 35: Copper New Qwik Flange–Application Data 71
Table 36: Flanged Collar Hole Location and Spacing 72
Table 37: Flanged Collar and Cutout Dimensions 73
Table 38: Aluminum Flanged End–Application Data 74
Table 39: Copper Flanged End–Application Data 74
Table 40: Flanged End-Flanged Collar Hole Location and Spacing 75
Table 41: Flatwise Elbows–Application Data 77
Table 42: Flatwise Offset–Application Data 78
Table 43: Double Elbows–Application Data 79
Table 44: Indoor Cable Tap Box (End)–Application Data 80

© 1986–2017 Schneider Electric
All Rights Reserved

Table 45: Outdoor Cable Tap Box (End)–Application Data 81
Table 46: Cable Tap Box (Center)–Dimensions and Lug Specifications..... 82
Table 47: Cable Tap Box (Bolt On)–Lug Specifications and Catalog Numbers 83
Table 48: Unfused Reducer (Indoor)–Ampere Ratings and Catalog No. Suffix 83
Table 49: Expansion Fitting (Indoor)..... 84
Table 50: Tees—Dimensions and Catalog No. Suffix 84
Table 51: Service Head Flatwise and Transformer Tap (One 3Ø Transformer)–Lug Specifications..... 86
Table 52: Service Head Vertical—Lug Specifications 86
Table 53: Transformer Tap—Dimensions and Lug Specifications 88
Table 54: Straight Length with Flanged Collar—Dimensions 89
Table 55: Roof Flange Kit—Catalog Numbers 89
Table 56: Hanger (Horizontal Flatwise)—Catalog Numbers..... 91
Table 57: Hanger (Horizontal Flatwise)—Catalog Numbers and Dimensions.. 92
Table 58: Hanger (Horizontal Edgewise)—Dimensions and Catalog Numbers 92
Table 59: Hanger (Vertical Spring)—Catalog Numbers..... 94
Table 60: Horizontal Seismic Hanger—Dimensions..... 95
Table 61: Wall and Floor Flange—Dimensions and Catalog Numbers 96
Table 62: Wall and Floor Required Cut-Outs—Dimensions 97
Table 63: End Closure (Indoor)-Dimensions and Catalog Numbers 98
Table 64: Maximum Amperage for Unit Types 99
Table 65: Special Purpose Plug-In Devices–Horsepower Rating..... 103
Table 66: Fusible Switch Plug-In Units Capacity..... 104
Table 67: Circuit Breaker Plug-In Units Capacity 104
Table 68: Required Clearances for Plug-In Unit Mounting 105
Table 69: Fusible Switch Plug-In Units—30–100 A (Type “PQ”) Specifications..... 106
Table 70: Fusible Switch Plug-In Unit—200 A (Type “PQ”) Specifications..... 107
Table 71: Fusible Switch Plug-In Unit—200 A (Type “PS”) Specifications..... 108
Table 72: Fusible Switch Plug-In Unit—400 A and 600 A (Type “PBQ”) Specifications..... 109
Table 73: Fusible Switch Plug-In Unit—400 A (Type “PBQA”) Specifications 110
Table 74: Fusible Switch Bolt-On Units—800–1200 A (Type “PTQ”) Specifications..... 112
Table 75: Circuit Breaker Plug-In Units—15–250 A Dimensions 113
Table 76: Circuit Breaker Plug-In Units—15–250 A Specifications..... 113
Table 77: Circuit Breaker Plug-In Units—250–600 A Specifications..... 114
Table 78: Communication Suffix..... 115
Table 79: H-and J-Frame Circuit Breaker Plug-In Units with Communications—60–250 A..... 115
Table 80: L-Frame Circuit Breaker Plug-In Units with Communications—250–600 A 117
Table 81: Circuit Breaker Bolt-On Units—250–1200 A Specifications 119
Table 82: Circuit Breaker Bolt-On Units—600–1600 A Specifications..... 121
Table 83: Surge Protective Devices—Surge Capacity..... 122
Table 84: Fusible Switch Starters / Lighting Contactors–Ratings and Dimensions 123
Table 85: Fusible Switch Lighting Contactor 123
Table 86: Combination Circuit Breaker and Starter—Contactor Specifications..... 124
Table 87: Ground Detector and Neutralizer—Catalog Numbers and Approximate Weights..... 125
Table 88: Short-Circuit Rating 127
Table 89: Short Circuit Ratings: RMS Symmetrical (Series Rated with an Upstream Circuit Breaker) 127

© 1986–2017 Schneider Electric
All Rights Reserved

Table 90: Powerbus Plug-In Unit Short Circuit Series Ratings 128
Table 91: Voltage Drop 128
Table 92: Physical Data 129
Table 93: Busway Catalog Numbering System 129
Table 94: Tap Box/Power Feed Unit: Specifications..... 133
Table 95: Tap Box/Power Feed Unit: Dimensions 133
Table 96: Tap Box/Power Feed Unit with Metering and Communications: Specifications..... 134
Table 97: Tap Box/Power Feed Unit with Metering and Communications: Dimensions 134
Table 98: Meter Suffix..... 134
Table 99: Circuit Breakers 136
Table 100: Receptacles 137
Table 101: Enclosure Ratings..... 137
Table 102: Ready-to-Assemble / Factory-Assembled Plug-In Unit Catalog Numbering System— Devices with Receptacle / Circuit Breaker ... 137
Table 103: Factory-Assembled Plug-In Unit Catalog Numbering System— Devices with Drop Cords and Connectors 137
Table 104: Drop Cord Lengths..... 138
Table 105: Metering 138
Table 106: FA Unit with Circuit Breaker—600 V Max 140
Table 107: QO/QOR Units with Circuit Breakers and Receptacles—120 V 140
Table 108: QOU Units with Circuit Breakers, Drop Cords, and Connectors (240 V Max) 141
Table 109: EDU Units with Circuit Breakers, 3 ft Drop Cords with NEMA Connectors (240 V Max), and PM5350 Meter 141
Table 112: NEMA Receptacles (R) and Connectors (C) 142
Table 110: EDU Units with Circuit Breakers, 3 ft Drop Cords with IEC Connectors (480Y/ 277 V Max.), and PM5350 Meter..... 142
Table 111: Gateway Unit 142
Table 113: IEC 60309 Connectors..... 143
Table 114: Additional Accessories..... 143
Table 115: Power-Zone™ Metal-Enclosed Busway—Minimum Dimensions and Other Specifications..... 146

© 1986–2017 Schneider Electric
All Rights Reserved

© 1986–2017 Schneider Electric
All Rights Reserved

Section 1—I-Line™ Product Features

Square D™ brand I-Line™ Busway, manufactured by Schneider Electric, offers a complete line of compatible, sandwich-type feeder and plug-in busway lengths and fittings. It allows maximum flexibility, and ease of installation, and offers electrical efficiency in the distribution of low voltage power for both commercial and industrial applications.

Our design and construction have been time-tested by many years of use throughout the world. I-Line busway has been used to supply power in thousands of installations throughout the world for decades. Our broad range of I-Line busway products include I-Line plug-in style from 225–600 A with aluminum or copper conductors, and I-Line II plug-in and feeder styles from 800–4000 A with aluminum conductors and up to 5000 A with copper conductors. I-Line and I-Line II busway are constructed in three-pole and four-pole full neutral configurations for system voltages to 600 V, and are rated to allow 100% of the current to flow continuously.

Busway installation is quick and easy. The compact, totally enclosed design is lightweight and easy to handle. Labor studies have shown that a 75% savings in installation time is not uncommon when comparing I-Line busway with cable and conduit installations. This significant reduction in installation time can result in total installed cost for busway being significantly lower than other distribution methods.

In addition, a wide variety of busway components and plug-in units are available for fast delivery.

No matter how you compare, I-Line busway is your solid first choice.

Sandwich Construction

I-Line feeder and plug-in busway both utilize sandwich-type construction to provide superior voltage drop characteristics, even at low power factors.

Steel housing sides and aluminum tops and bottoms have been carefully designed to reduce component weight and minimize the hysteresis and eddy current losses that are common in all-steel housings.

Plug-in busway ratings that utilize two or three bus bars per phase have a phase paralleling feature at the joint assembly of each straight length. This helps equalize bus bar loading when plugs are mounted on one side only.

The plug-in housing has notches along the top rail for easy alignment and installation of plug-in units.

Within the same ampere rating, all I-Line II busway lengths and fittings are fully compatible between feeder and plug-in styles using standard universal tie channels (housing “splice plates”) supplied with each component.

Totally Enclosed Housing

Ventilated busway depends on free air movement through a perforated housing to cool the bus bars. Unless mounted in its preferred position (for maximum bus bar cooling), ventilated busway must be de-rated. Ventilated housing also permits dirt accumulation and offers limited protection of bus bars due to the open ventilation slots.

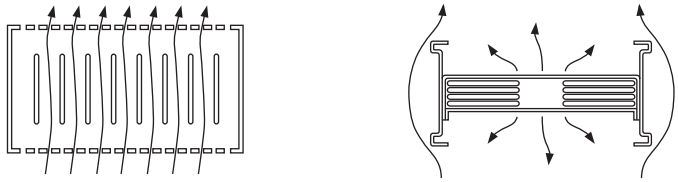

Figure 1: Ventilated Housing (left) and I-Line II Totally Enclosed Housing (right)

I-Line busway has a modern “totally enclosed housing” design requiring no de-rating regardless of mounting position. Because the housing has no ventilation holes, the entry of dirt and possibility of accidental contact with bus bars is greatly reduced.

© 1986–2017 Schneider Electric
All Rights Reserved

Compact Size

I-Line II busway is compact. The small size means it can be used in locations where feeder circuits would not otherwise be possible. Efficient use of light-weight raw materials is an additional factor in I-Line busway's compact design.

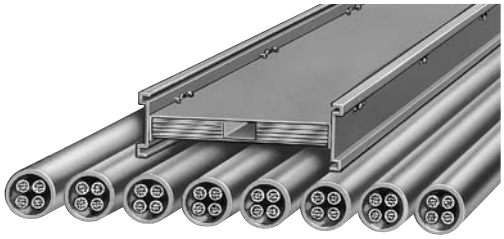

Figure 2: Compact Design

Finish

I-Line busway users get a tough, durable, and uniform polyester powder coat paint finish, making their busway installations functional and attractive for years to come.

Insulation

UL 857 *Standard for Busways* requires busway systems to be designed not to exceed a total operating temperature of 203 °F (95 °C). The polyester film and epoxy insulation systems used in the high quality design of I Line II busway provides improved thermal and electrical characteristics over the UL requirements.

Plating

Bus bars for I-Line and I-Line II busway are plated to ensure low surface-to-surface contact resistance and to minimize surface corrosion. Aluminum bus bars are electroplated with a coat of tin after preparation with the ALSTAN 80 process. Copper bus bars are plated with a layer of silver that is flashed onto the surface of the bus bars.

Dielectric Testing

Underwriters Laboratories (UL) and the Canadian Standards Association (CSA) require a one-time dielectric test for all new busway designs prior to certification. This test, at two times rated voltage plus 1000 Vac (2200 Vac), is intended to confirm the integrity of the insulation system. I-Line busway passes this test.

Every length and fitting of our busway must also pass a 7500 Vdc hi-pot test before shipment from the factory. This additional test helps ensure the highest quality busway possible.

© 1986–2017 Schneider Electric
All Rights Reserved

Visi-Tite™ One Bolt Joint

Figure 3: Visi-Tite Bolt

I-Line busway incorporates the “one bolt” joint principle. This joint design uses a high-strength (Grade 5) Visi-Tite bolt to provide a clamping force of over 4000 pounds. The force is distributed over the contact area by a pair of large diameter, spring steel, cupped conical washers. On higher ampere ratings (2000 A or above) two or three joint bolts are used—one for each set of bus bars. Our “one bolt” principle replaces older designs that required up to 32 nuts, bolts, and washers for each set of bus bars. The Visi-Tite torque indicating joint bolt is standard on all busway joints. Insulated and at ground potential, the bolt and nut are both captive to reduce installation time.

Fast, accurate torquing is a snap with Visi-Tite double-headed bolts. There’s no need for a torque wrench. Use any long-handled wrench to tighten the outer bolt head until it twists off and releases a red plastic warning disc. Any disc remaining during inspection indicates an improperly torqued joint. For maintenance of the joint or when busway is relocated, the Visi-Tite bolt should be tightened to 70 lb-ft +/- 10 lb-ft (94.92 N•m +/- 13.56 N•m) with a torque wrench.

EZ Joint Pak™ Connector Assembly

I-Line II busway offers an improved single-bolt joint package that can be removed and replaced with an isolation joint pak to electrically isolate busway sections for load shifting and maintenance. It can also be relocated to the opposite end of a length to take care of last minute job changes. The EZ Joint Pak Connector Assembly is shipped pre-assembled with each I-Line II busway length or fitting, providing minimum job site installation labor. The Visi-Tite bolt is a standard feature on all assemblies.

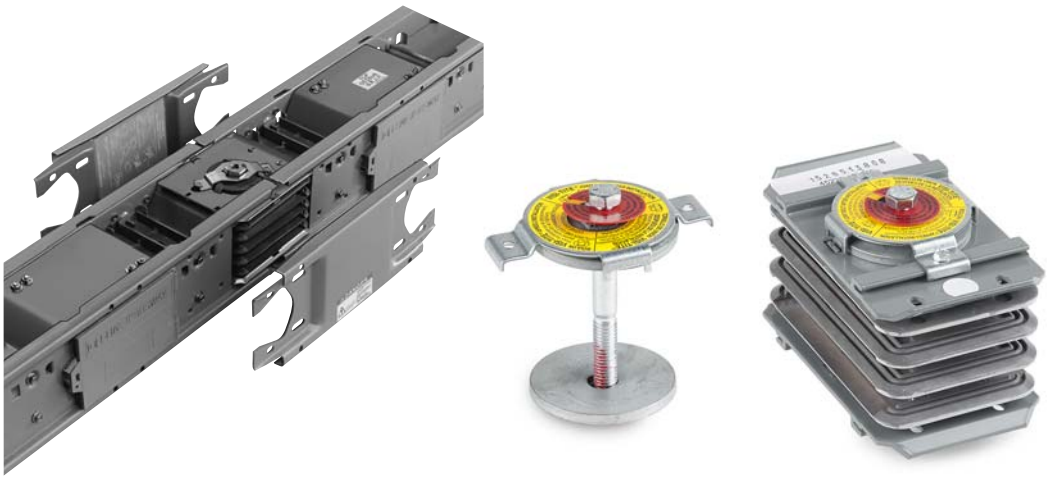

Figure 4: EZ Joint Pak Connector Assembly

© 1986–2017 Schneider Electric
All Rights Reserved

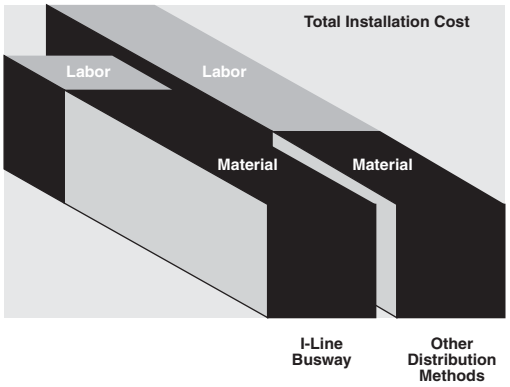

Figure 5: Reduction in Installation Cost

Labor Savings

I-Line II busway installs quicker than other forms of low voltage power distribution. Also, the labor cost required to install I-Line II busway is often much lower. This results in an overall reduction in total installation cost.

Tie Channels

I-Line II busway uses one set of universal tie channels for all ampere ratings of busway—both feeder and plug-in. This helps speed up busway installation.

Internal Smoke/Gas Barriers

Continuous air spaces inside I-Line II busway housing are closed off with special barriers to help prevent the spread of smoke and gases in the event of a fire in the area of the busway installation. This standard internal barrier allows busway to extend through walls or floors without creating open space for a “chimney effect” fire path.

I-Line busway from 225–600 A requires installation of a special internal barrier for wall or floor penetrations.

Short Circuit Strength

I-Line busway housing construction gives high short circuit ratings. For a description of these ratings, see Table 1, Table 2, Table 3, and Table 4 on pages 43 and 44.

Voltage Drop

I-Line busway voltage drop is low because of its extremely low reactance. This efficient design allows power to be delivered in an installation with the highest efficiency possible. This makes I-Line busway ideal for efficient power distribution in commercial or industrial facilities.

Outdoor Busway

Outdoor feeder busway is furnished with a housing construction employing a special gasketed design to prevent the entry of rain. Unique engineering and design features allow field installation in any mounting position while still maintaining outdoor integrity. This product symmetry provides for proper installation in all instances. The Visi-Tite bolt is also standard on outdoor busway.

Outdoor busway is normally installed as an IP65 application. To install as an IP66 application, see instruction bulletin no. 45123-922-01.

Universal Fittings

I-Line II busway fittings are designed for use with feeder and plug-in busway straight lengths as well as for continuations of service entrance busway runs. The compact universal fittings allow maximum layout flexibility without the need for special built-to-order combination fittings.

© 1986–2017 Schneider Electric
All Rights Reserved

Quality

All I-Line busway products are manufactured in a Schneider Electric facility that has been registered by Underwriters Laboratories to ISO9001: 2015.

Integral Ground Bus

I-Line II busway (800–5000 A) is built with an innovative Integral Ground Bus (IGB) system, proven by many years of use on original I-Line busway installations.

In simple terms, IGB utilizes two 1/16-inch thick ground bus bars to form the housing top and bottom. This provides an integral 50% capacity ground path. Equally important, the two ground bus bars completely encircle the phase conductors and provide a very effective high level ground path for ground faults. Copper integral ground is available as an option.

We believe a properly designed ground should be included on all distribution systems. I-Line II busway includes IGB as a standard feature on every rating from 800–5000 A. Integral ground bus is available as an option on 225–600 A busways.

We offer many products and services to fulfill the need for complete and reliable grounding throughout your electrical system. Consult your local Schneider Electric representative for assistance in this very important aspect of proper electrical design.

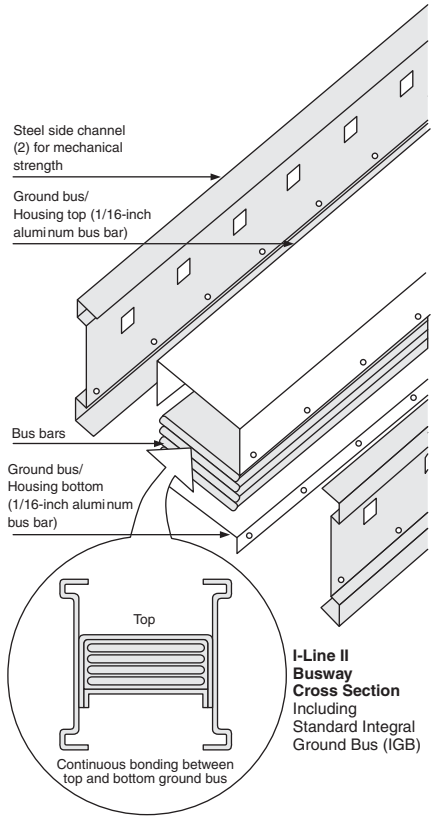

Figure 6: I-Line II Busway Cross Section

© 1986–2017 Schneider Electric
All Rights Reserved

Section 2—I-Line™ Construction

Plug-In Busway 225–600 A

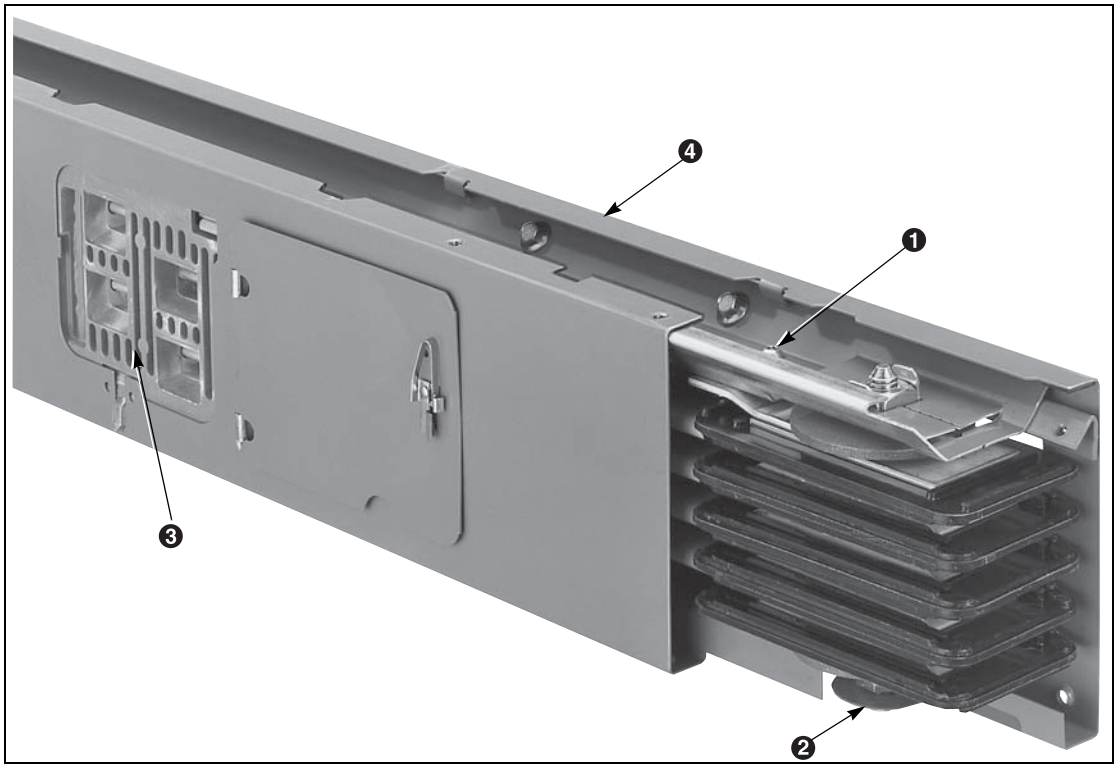

Figure 7: Plug-In Busway 225–600 A

1. Integral Ground Bus (IGB)—furnished as an optional feature for I-Line™ busway and rated at 50% capacity of the nameplate amperage rating of the busway. The conductor is aluminum and is the top part of the housing itself.
2. Visi-Tite bolt—a double-headed bolt furnished for all joint connectors to ensure proper torque for each connection. A cupped conical washer is also included to ensure equal distribution of pressure across the full joint surface area.
3. Plug-in openings—furnished standard with plug-in openings on 2 ft (61 cm) centers on both sides of I-Line busway. The openings include a hinged door that covers the opening when it is not in use. A 600 A maximum capability is at each plug-in opening. Hangers for the busway fit without blocking access to the plug-in opening.
4. Enclosure—a three-piece formed housing with plug-in openings supported by molded rigid insulators.

NOTE: Insulation for I-Line busway meets UL 857 requirements.

© 1986–2017 Schneider Electric
All Rights Reserved

Plug-In Busway 800–5000 A

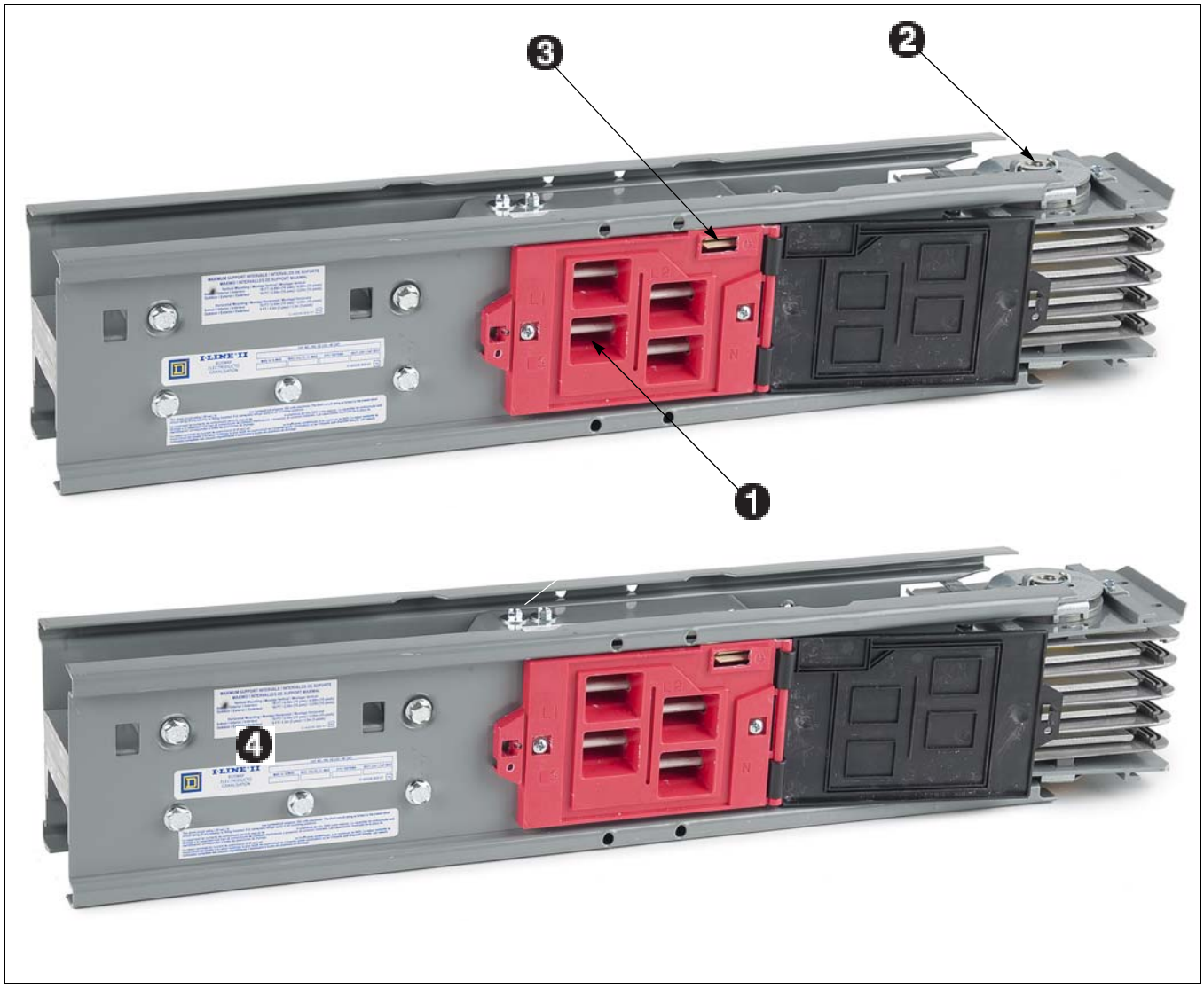

Figure 8: Plug-In Busway 800–5000 A

1. Molded plug-in opening insulator—adds insulation and support at plug-in contact area.
2. EZ Joint Pak connector assembly—includes like-phase connector on higher ampere ratings with more than one conductor per phase (plug-in bus only).
3. Ground jaw for plug-in unit—has a “blow-on” design similar to phase jaw connection.
4. Fittings—includes elbows, tees, and flanged ends that are easily removed and refitted with the use of our EZ Joint Pak assembly without disturbing adjacent lengths.

NOTE:

— Internal barriers are standard on both feeder and plug-in busway. All interior spaces are barriered to stop hot gases.

— Hangers fit both feeder and plug-in busway without blocking access to openings.

— I-Line plug-in units (15–1600 A) fit both original and I-Line II busway.

— I-Line II plug-in busway with sandwich construction also includes the feeder-style features shown on page 22.

© 1986–2017 Schneider Electric
All Rights Reserved

Indoor Feeder Busway 800–5000 A

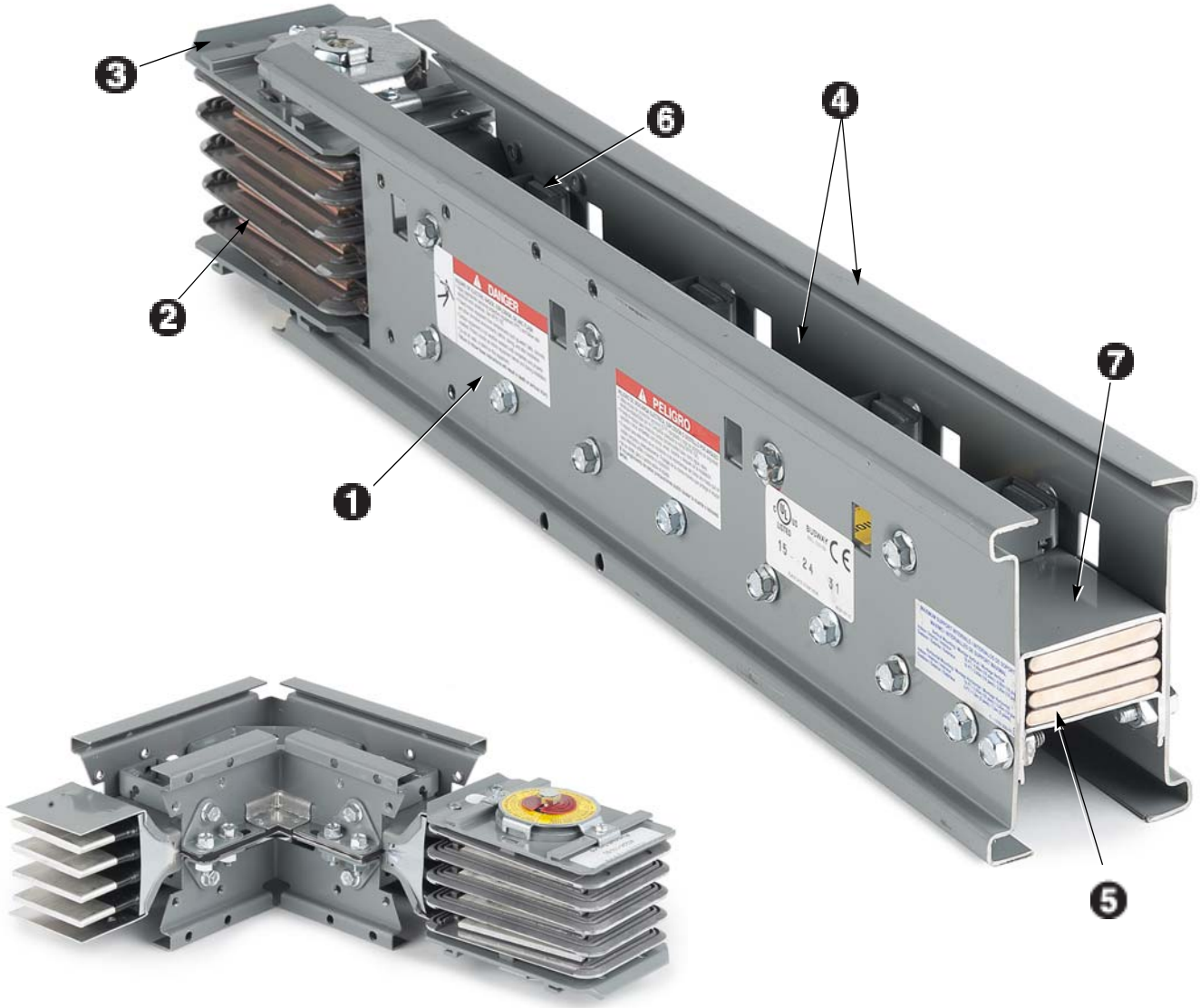

Figure 9: Indoor Feeder Busway 800–5000 A

1. Steel housing channels—provides mechanical strength.
2. Molded extra-strength glass fiber interphase barriers.
3. EZ Joint Pak connector assembly—removable for isolation or maintenance. Includes Visi-Tite bolt.
4. Steel/aluminum housing—reduces hysteresis and eddy current losses on feeder and plug-in busway.
5. Plated aluminum or copper bus bars.
6. Surge clamps for added short circuit strength.
7. Integral Ground Bus (IGB)—two, 1/16-inch thick aluminum bus bar. Also serves as top and bottom housing.

NOTE:

— Polyester powder paint process—provides lasting uniform performance.
— Housing sizes—the same for I-Line II feeder and plug-in busway. Same accessories fit both.
— Insulation for I-Line busway meets UL 857 requirements.

© 1986–2017 Schneider Electric
All Rights Reserved

Outdoor Feeder Busway 800–5000 A

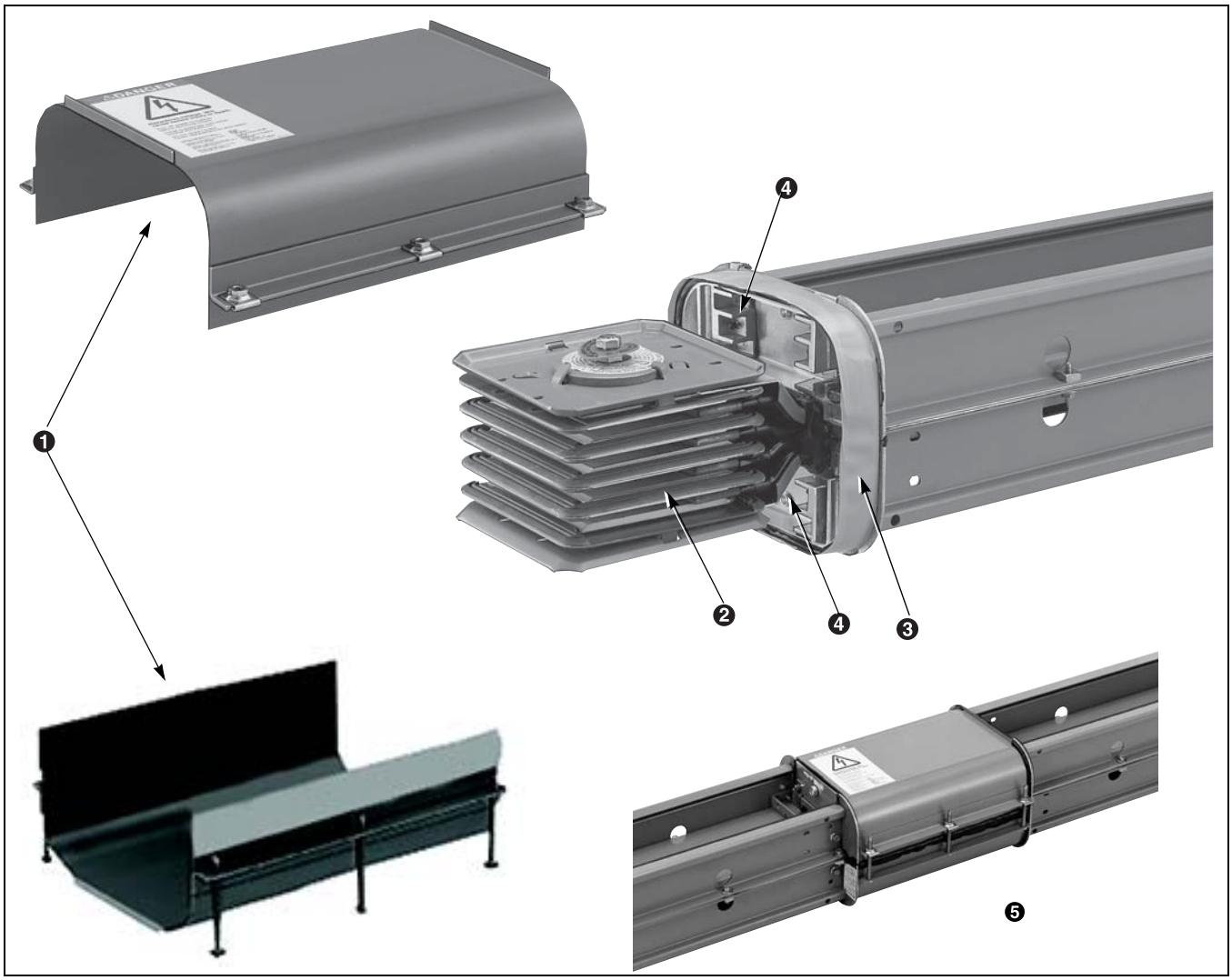

Figure 10: Outdoor Feeder Busway 800–5000 A

1. Joint covers— two-piece joint cover with quick-fasten nut for speedy installation of the busway.
2. EZ Joint Pak—same joint pack used on our indoor I-Line II busway is continued in our outdoor feeder design.
3. Flanged collar—simple installation of the joint covers is assisted by a smooth flange surface with a factory-installed joint sealant strip. Removing the sealant's protective paper covering and installing the joint covers with the quick fasten nut, seal the joint from water contamination.
4. Removable drain plug—outdoor feeder design includes removable drain plugs to allow condensation to escape from the joints. These drain plugs should be removed only as described in the installation instructions for outdoor feeder busway. Outdoor feeder busway can be installed to achieve an IP66 environmental rating with drain plugs and sealing strips located per the I-Line II Outdoor Feeder Busway instruction bulletin document no. 45123-922-01.
5. Completed joint—assembled joint with all installation activities complete.

NOTE: Supports are required on 5 ft (152 cm) centers for vertical mounting or 10 ft (305 cm) for horizontal mounting.

© 1986–2017 Schneider Electric
All Rights Reserved

Busway Order Entry Checklist

Listed below are the four basic types of busway applications:

- Service Entrance Run
- Plug-In Type Horizontal Run
- Plug-In Type Vertical Run
- Feeder Type Tie Run

In addition to the information electronically entered into the Product Selectors, the additional information needed to engineer a busway run is listed below. **A busway run can consist of more than one type of application.**

Busway Order Entry Checklist

Type of Application				
1	2	3	4	
SERVICE	HORIZONTAL	VERTICAL	TIE	Busway Order Entry Checklist Order Number: _____ Completed by: _____ Field Office: _____ Date: _____ (X) = Required Information
X	X	X	X	A. Layout sketch of busway run
X	X	X	X	B. All necessary dimensions
X	X	X	X	C. Positions of equipment (fronts or rears)
X	X	X	X	D. Phasing of existing equipment or equipment by others
X	X		X	E. Location of walls (if applicable)
		X		F. Location of floors (floor to floor dimensions)
X	X		X	G. Wall thickness (if applicable)
		X		H. Floor thickness
X			X	I. Location of roof (if applicable)
X			X	J. Roof thickness (if applicable)
X	X	X	X	K. Special requirements noted on busway sketch (*e.g.*, special lugs, critical dimensions)
X				L. Indicate appropriate service device (*e.g.*, tap box, service head, x'fmer. tap, bussed)
X	X	X	X	M. Equipment details if connecting busway to other than Schneider Electric equipment
	X	X		N. Indicate location of plug-in busway on sketch
		X		O. Indicate the side of the busway on which the plug-in units are to be mounted
		X		P. Indicate if there are any curbs where busway passes through floors
		X		Q. Curb thickness (in addition to the floor thickness)
		X		R. Indicate type of vertical hangers (spring or fixed)
X	X	X	X	S. If connecting to existing I-Line™, indicate bolt or slot connection
X	X	X	X	T. If connecting to other than Schneider Electric busway, contact your local representative
X	X	X	X	U. Switchboard identification markings noted on busway sketch

NOTES:

1. For detailed illustrations, refer to pages 25–34.
2. Missing information will cause delays in order processing and can affect the delivery schedule.
3. If additional assistance is required, contact Schneider Electric at 1-888-778-2733.

© 1986–2017 Schneider Electric
All Rights Reserved

Section 3—I-Line™ Application Data

The Four Types of Busway Runs

There are four major types of busway applications. Figures 1 through 4 illustrate the basic systems.

Service Entrance Run

Figure 11 is a typical service entrance run from a utility transformer to a switchboard. Cables connect directly to the busway. (Generally a combination outdoor-indoor application.)

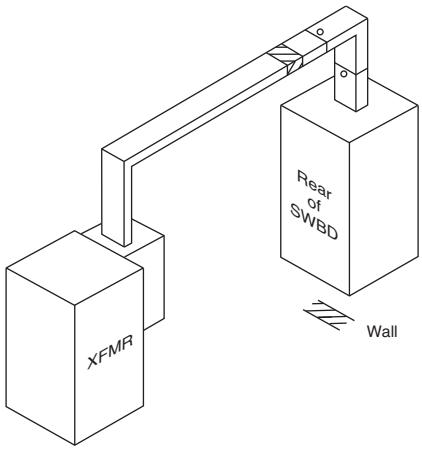

Figure 11: Typical Service Entrance Run (Utility Transformer to a Switchboard)

Plug-In Type Vertical Riser

Figure 12 is a simple plug-in riser fed by a switchboard. (Always an indoor application.)

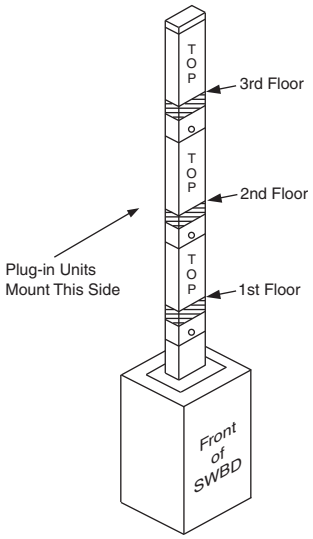

Figure 12: Plug-In Riser Fed by Switchboard

© 1986–2017 Schneider Electric
All Rights Reserved

Plug-In Type Horizontal Run

Figure 13 is a simple plug-in run fed by a switchboard through a tee. (Always an indoor application.)

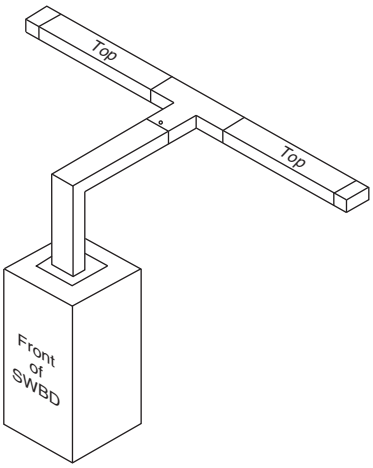

Figure 13: Plug-In Riser Fed by Switchboard through a Tee

Feeder Type Tie Run

Figure 14 is a typical feeder run between two switchboards. (Generally an indoor application.)

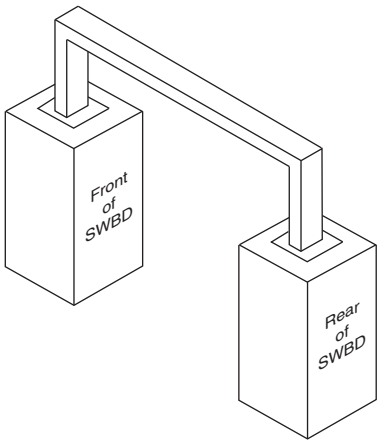

Figure 14: Feeder Run between Two Switchboards

© 1986–2017 Schneider Electric
All Rights Reserved

Service Entrance Runs

I-Line II busway can be used as a service entrance conductor to bring power from a utility transformer into a distribution switchboard. Cable or solid bussing is used to connect to the transformer.

When the transformer is connected to the busway using cables, the governing electrical code can specify height clearance requirements for the cables.

Figure 15 illustrates the dimensions to consider when planning this type of run.

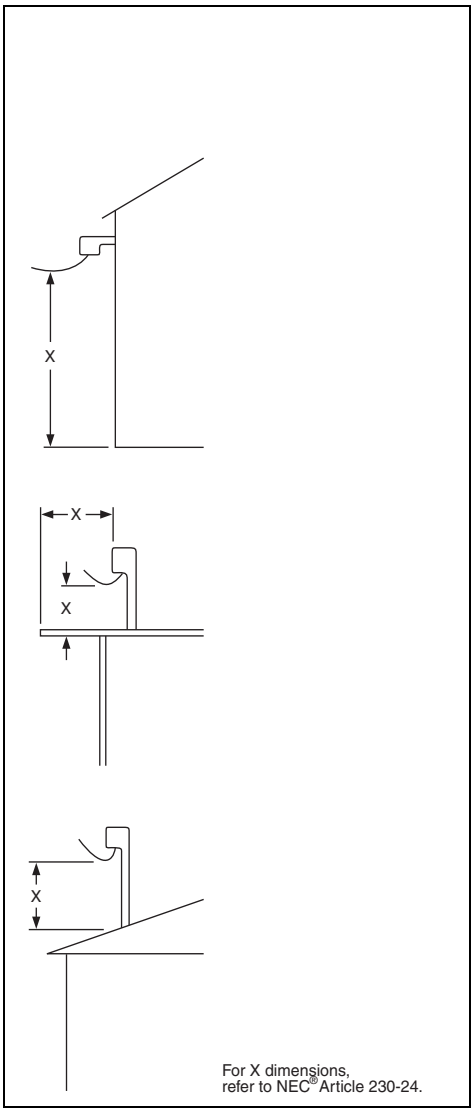

Figure 15: Typical Connection of Transformer to Busway using Cables

Service Heads

If the busway specifications or local utility require the service entrance cable-to-busway termination to be enclosed in a weatherproof box, then a service head should be ordered.

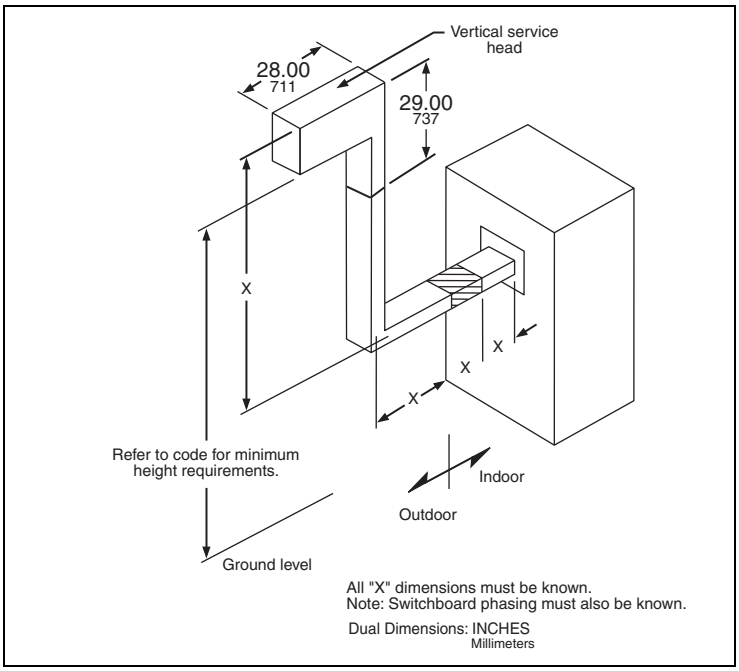

Figure 16: Typical Vertical Service Head Application

If the flatwise busway elevation is too low to allow a cable connection that would comply with the electrical code, the vertical service head (SV) could solve this issue. The SV is attached to busway that exits the rear of the switchboard and is turned upward (see Figure 16) or is attached to busway that exits the top of a switchboard and extends through the roof (see Figure 17 on page 28).

If a vertical service head extends through a roof, the roof must be sealed around the busway. To do this, a fixed collar must be factory assembled onto the section of busway that penetrates the roof. The contractor can then install flashing from the collar to the roof. A roof flange kit can be ordered from the factory to make the flashing job easier. The kit consists of a drip flange and a roof collar. When installed, the roof collar must be sealed to ensure that no moisture gets indoors. The roof flange kit will accommodate a roof slope up to one inch per foot. See Detail A in Figure 17 on page 28.

© 1986–2017 Schneider Electric
All Rights Reserved

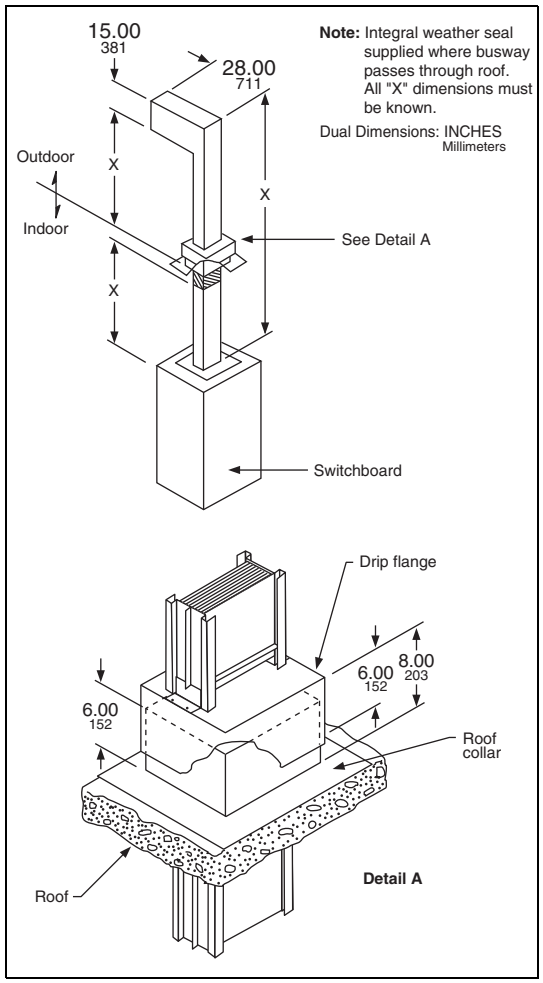

Figure 17: Vertical Service Head Penetrating a Roof

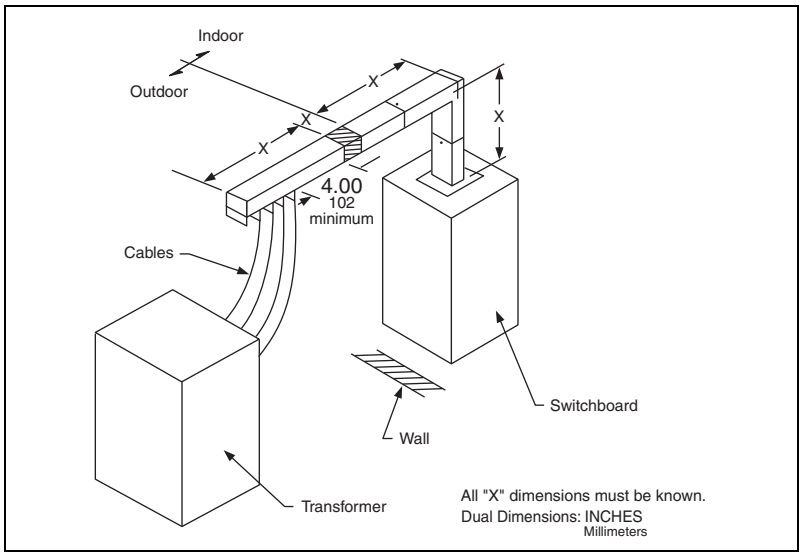

Figure 18: Transformer Tap for One Three-Phase Transformer

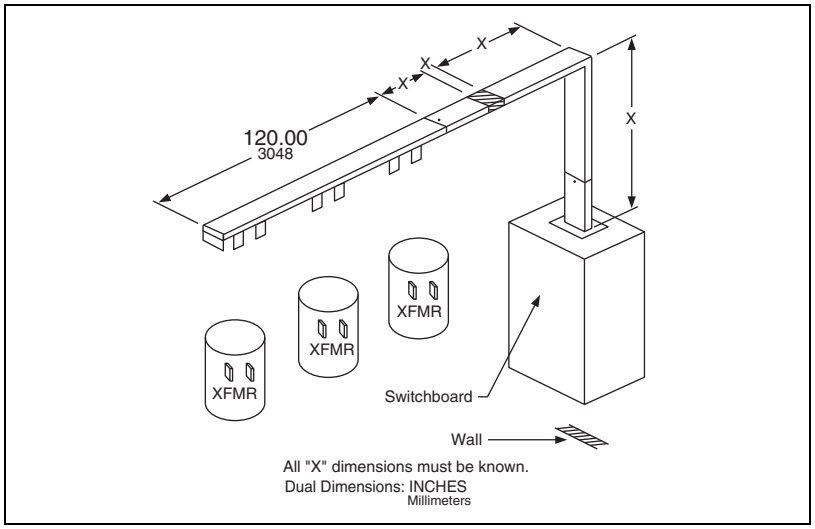

Figure 19: Transformer Tap for Three Single-phase Transformer

Transformer Taps

A transformer tap performs the same function as a service head, except that the lugs and bussing to which the service entrance cables are connected are not enclosed in a weather-proof enclosure.

A flatwise service head (SB) with the box removed is therefore a transformer tap (SF). An SF is a transformer tap for one three-phase transformer. Figure 18 illustrates a typical SF service entrance run.

If three single-phase transformers are supplied by the utility to deliver power to the customer, a separate transformer tap has been designed for this application. This transformer tap is known as a “TTF” and is shown in Figure 19.

© 1986–2017 Schneider Electric
All Rights Reserved

Bussed Transformer Connections

If required, the factory can provide a bussed transformer connection. **This type of connection will include flexible connectors from the low voltage spades of the transformer to the busway connectors.** These flexible connectors allow for busway expansion and contraction on the low voltage spades. Positioning of these flexible connectors is critical for proper alignment between the busway and transformer.

Bussed transformer connections are made for two types of transformers. One type has a low voltage throat as shown in Figure 20, and the other is a pad-mounted type with a low voltage compartment as shown in Figure 21 on page 30.

Phasing

With bussed transformer connections, it is necessary to properly coordinate the phasing of the transformer and of the switchboard it supplies. Schneider Electric can coordinate the phasing for you. Simply supply the name of the transformer manufacturer and phasing details of the low voltage side.

Other Service Entrance Connections

Occasionally, the customer or local utility will require a service entrance connection that differs from our standards. In this case, be sure to inform your Schneider Electric representative of any special dimensions, such as required height of service head from ground or floor, spacing between phase bars, number and type of lugs, distance from lugs to wall, phasing, etc.

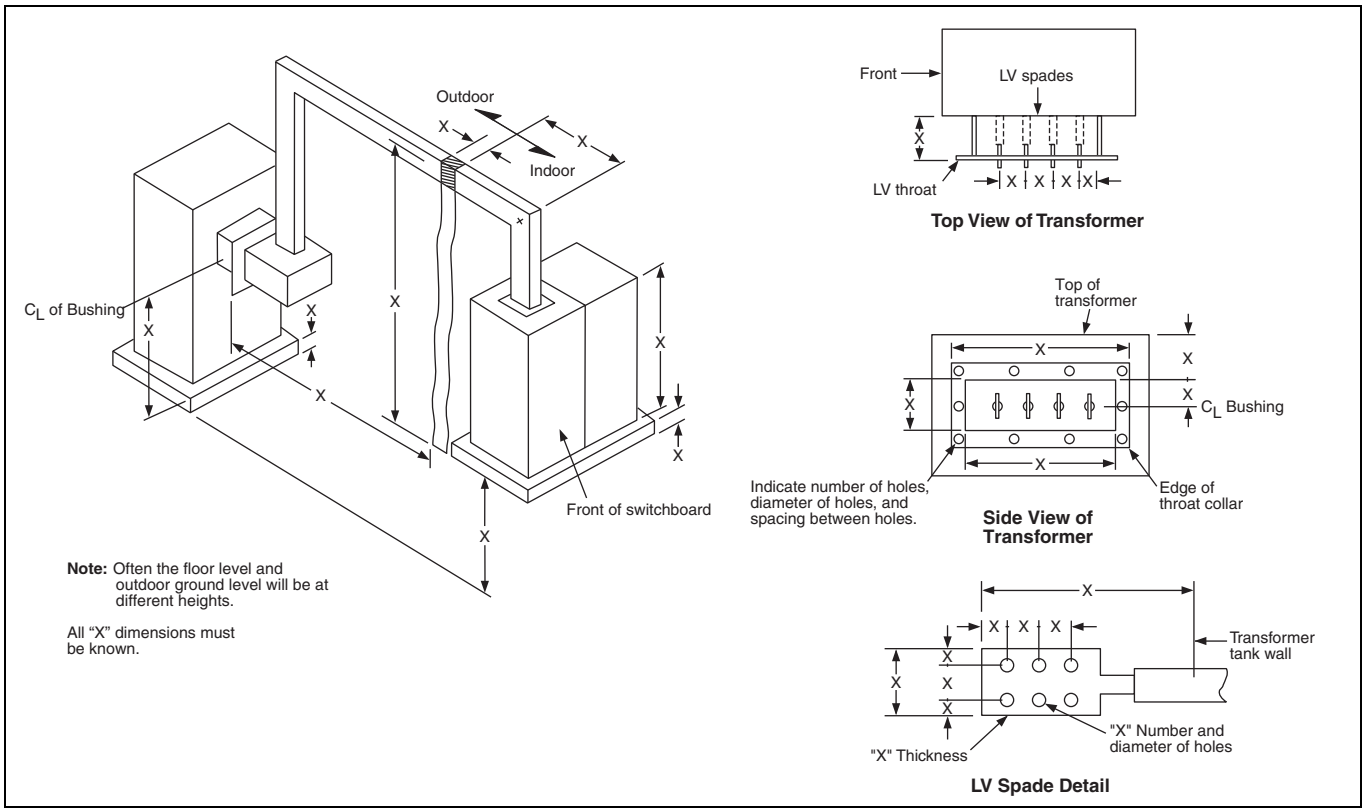

Figure 20: Information Needed for Bussed Transformer Connection (Throat Type)

© 1986–2017 Schneider Electric
All Rights Reserved

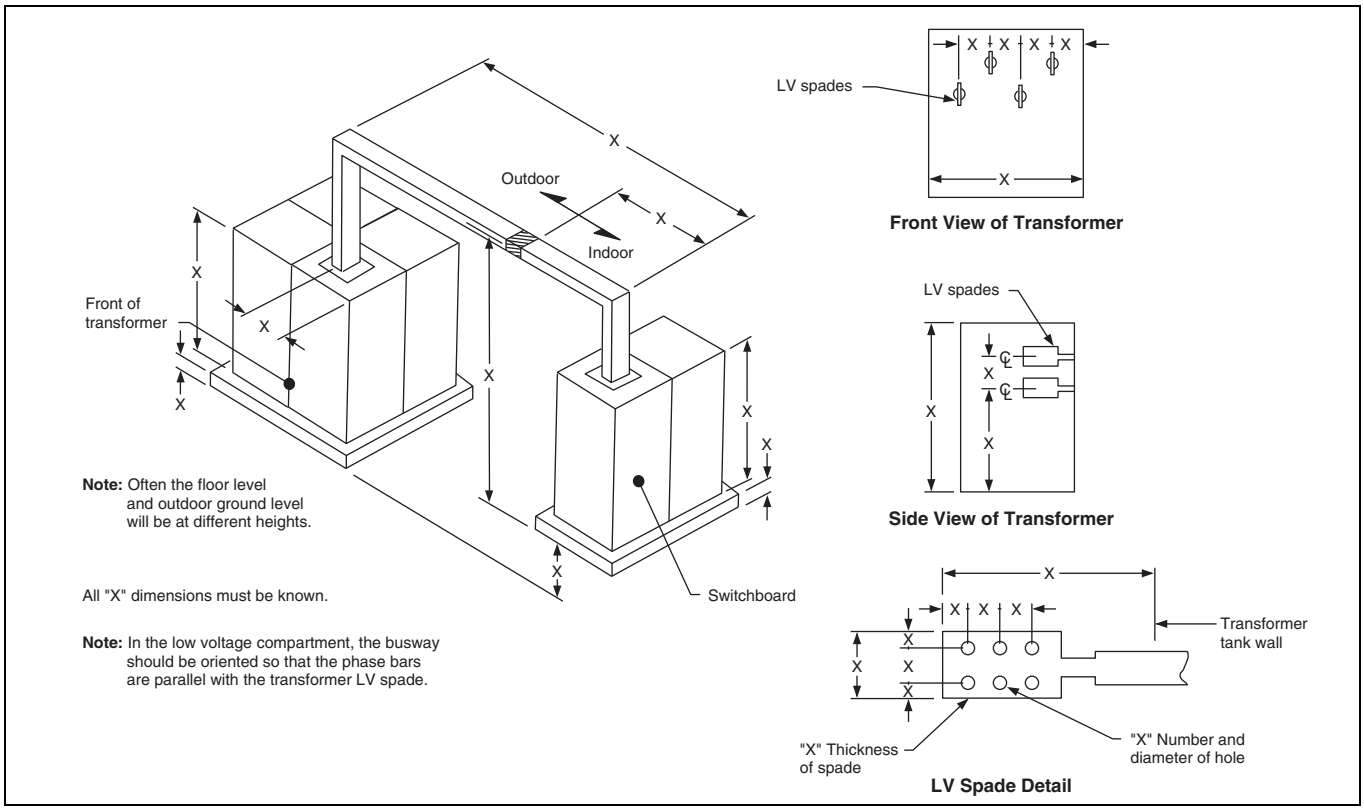

Figure 21: Information Needed for Bussed Transformer Connection (Pad-Mounted Type)

© 1986–2017 Schneider Electric
All Rights Reserved

Plug-In Busway Horizontal Run

Plug-in busway is used as a means of bringing power from a distribution switchboard to multiple loads throughout a building or manufacturing facility.

Phasing

A typical I-Line II plug-in run is shown in Figure 22. The phasing shown on the plug-in busway is “GABCN” top to bottom, with the top located as shown for a horizontal run. This phasing arrangement must always be followed to help ensure proper phasing of the plug-in units (see Detail A). Because this busway phasing must be followed, it is the busway that will determine the phasing of the switchboard.

NOTE: Plug-in busway has the integral ground bus plug-in jaw on the top side only.

Identification

When submitting busway run sketches for review, ensure that the plug-in busway sections are marked (P).

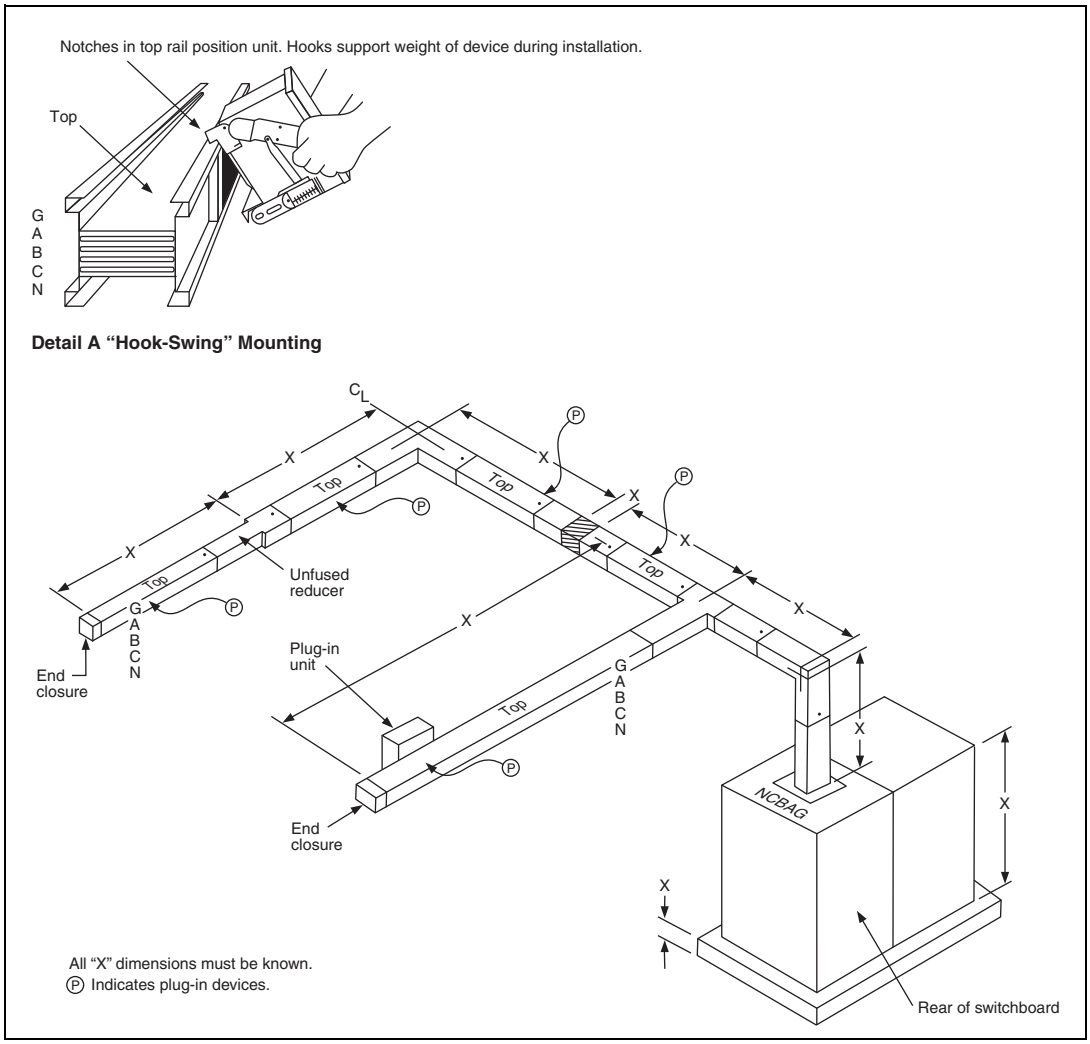

Figure 22: Measurements Needed for a Typical Plug-In Type Run

© 1986–2017 Schneider Electric
All Rights Reserved

Plug-In Risers

I-Line II plug-in busway can be utilized for the entire vertical riser. There is no need to use feeder busway to penetrate the floors. This feature enables the use of more plug-in openings per floor of the riser. (Plug-in risers under 800 A require internal barriers where the busway passes through a floor.)

Dimensions

The riser in Figure 23 has been fully dimensioned. Note that the feeder style busway has been used out of the switchboard and the two 120-inch (3048 mm) sections of plug-in style busway on the second and third floor do not have a joint located in or near the floor. Refer to page 34 for a discussion and detail of joint accessibility requirements.

Figure 23 shows typical dimensions that are known to ensure an accurate installation: floor-to-floor height, floor thickness, exact layout of multiple run riser, closet dimensions, the type and quantity of plug-in tap units per floor, which side of the busway the units should mount on, and (if necessary) the desired height of the units from the floor.

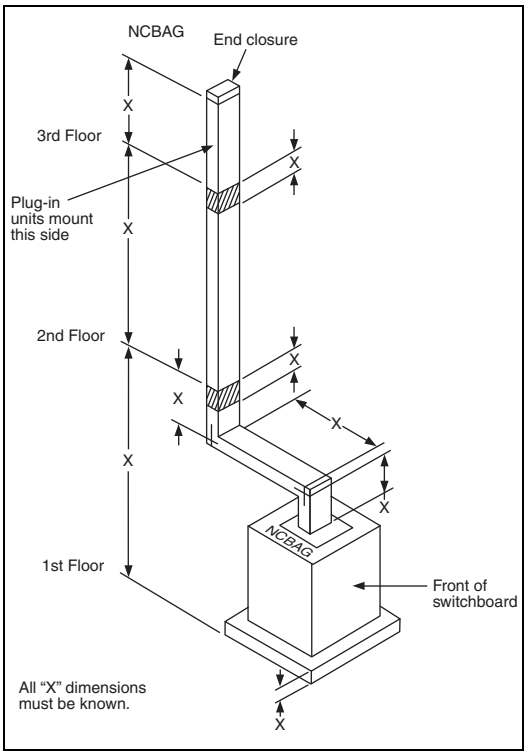

Figure 23: Typical Information Needed for Riser

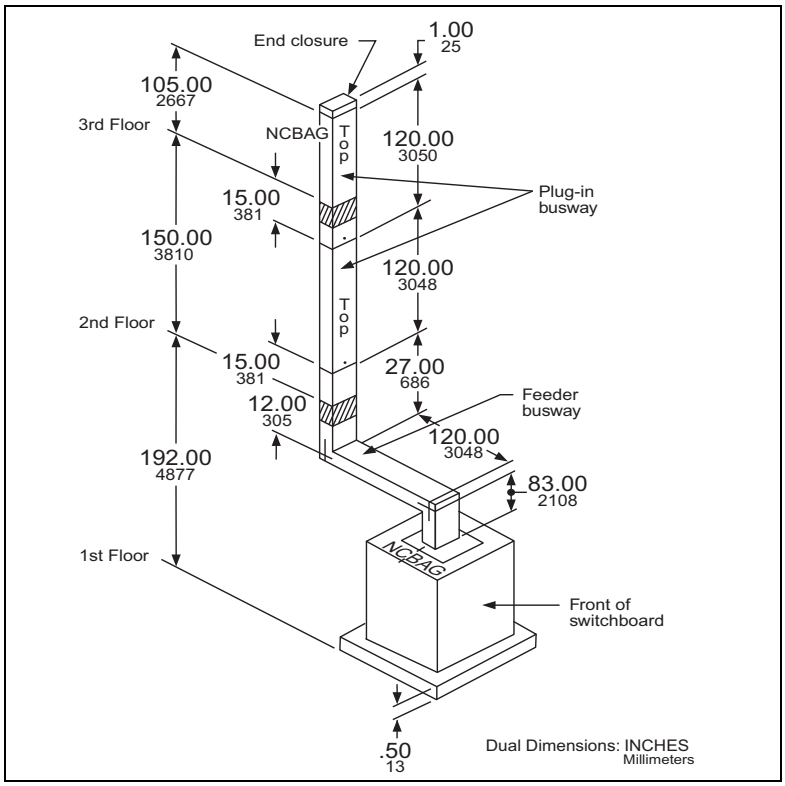

Figure 24: Typical Layout—800 A Rise

© 1986–2017 Schneider Electric
All Rights Reserved

Riser Installation and Phasing

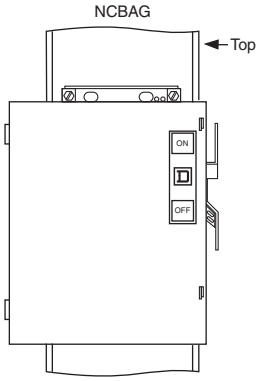

Figure 25: Correct Orientation of Riser Busway

Circuit breaker types 250 A and below and the 30 A, 60 A, and 100 A fusible type plug-in units can be mounted on either side of the busway in riser installations.

When fusible type plug-in units are being supplied, the location of the plug-in unit determines the phasing of the busway. NEC Article 404.6 and CEC Article 14.502 state: *"Single throw knife switches shall be mounted so that gravity will not tend to close them."* It is essential that the busway is oriented with the correct side available for the insertion of the units.

To determine the correct busway orientation (based on where the plug-in units mount for your installation), please contact your local representative for assistance and coordination.

Figure 25 shows the correct mounting and phasing of the riser busway and plug-in unit.

NOTE: The face labelled "TOP" **must be** installed as shown on the installation drawings provided with your project.

Special Manufacturer's Recommendation

The NEC requires that a waterproof curb is installed at each floor opening where busway passes through (see Figure 26). An unprotected floor opening can act as a funnel for plumbing leaks, sprinkler system leaks, fluid spills, and other types of contamination.

The cost of removing and replacing a contaminated busway length far exceeds the cost for including a waterproof curb when the floors are poured.

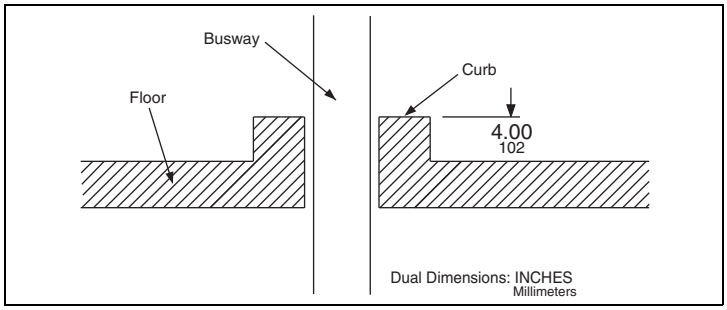

Figure 26: Waterproof Curb Recommended at Floor Opening

Once busway is installed through a floor opening, the remaining unused area must be filled to prevent smoke from passing floor-to-floor (chimney effect) in case of fire in the building. Some recommended materials are fire-rated foam and caulk. Grouting is also acceptable, but it must be applied in a very dry form to prevent water and contaminants from entering the busway once the grouting cures and the water leeches out. Check with your local inspector to determine the appropriate materials to use in filling the void around the busway.

Plug-In Units

When entering an order, the factory must know not only which side of the busway the plugs will mount on, but also the type and quantity of plugs to use on each floor. Also, notify the factory if the plugs need to be mounted at a certain height from the floor.

Hangers

Spring hangers are recommended for riser applications. When properly installed and maintained, spring hangers compensate for expansion and contraction of the busway, as well as shrinkage of the building. In riser applications, support for busway must be provided at intervals not exceeding 16 ft (488 cm).

© 1986–2017 Schneider Electric
All Rights Reserved

Feeder Runs

Feeder type runs are normally used for distributing power to loads that are concentrated in one area. Typical connections are switchboard-to-switchboard tie runs (see Figure 27), or a switchboard feeding a remote motor control center (MCC).

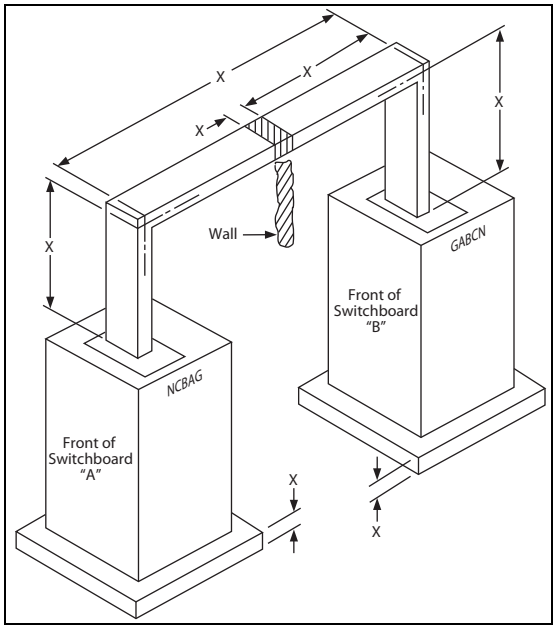

Figure 27: Measurements Needed for Feeder Type Run

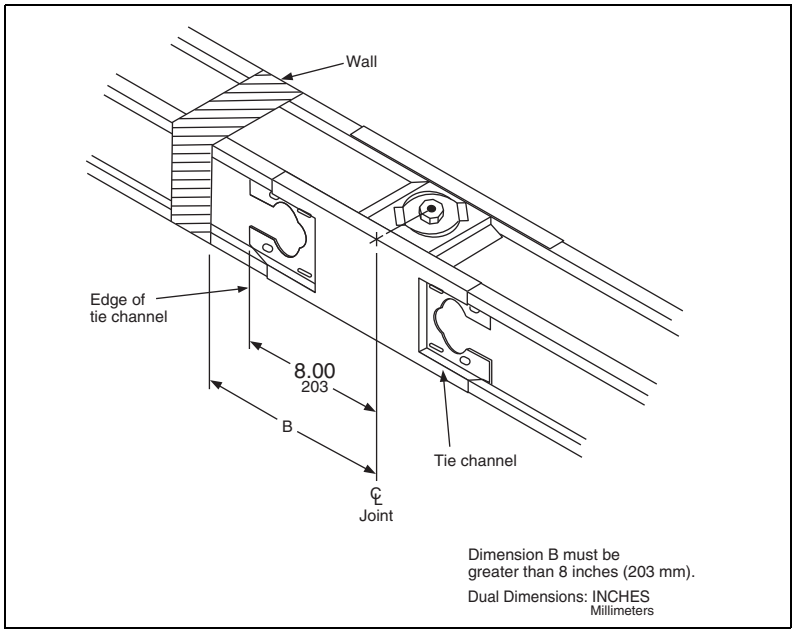

Figure 28: Joint Accessibility Requirements

Busway Through Walls and Floors

When 800–5000 A busway extends through a wall or floor, feeder or plug-in busway can be used. For runs under 800 A, plug-in busway will be used throughout. In all cases, wall or floor location must be specified.

According to CEC Article 12.2000 and NEC Article 368.10, busway must be installed so that supports and joints are accessible for maintenance purposes after installation. This implies that no part of the tie channel can be inside the wall. Therefore, the distance from the center line of the joint to the wall must be greater than the distance from the center to the edge of the tie channel (see Figure 28). If the dimensions of the tie channel cannot easily be determined, it is best to keep the joint at least 12 inches (305 mm) from the wall. This will ensure proper joint clearance for any type of busway passing through a wall or floor.

© 1986–2017 Schneider Electric
All Rights Reserved

Section 4—I-Line™ Layout and Measurement

Known Information

From the bid documents, specifications, and/or factory drawings, the following information is known:

- Busway is to be 1600 A, 3Ø4W, 50% GND, aluminum feeder busway. Width is determined to be 8.84 in. (225 mm).
- Switchboard is 7 ft x 7.5 in. (213 cm x 191 mm) high, 3 ft (91 cm) wide, and 2 ft (61 cm) deep. Busway connection to be in top center.
- Motor control center is 7 ft x 7.5 in. (213 cm x 191 mm) high with a 1 ft (30 cm) additional height pull box for busway connection; 20 in. (508 mm) wide; 20 in. (508 mm) deep. Busway connection is in top center.
- Bottom of busway (BOB.) to be installed 16 ft (488 cm) above finished floor (AFF) unless obstructed.

1. Determine the physical size of the busway housing.

   This information lets you know how far to stay away from obstructions. In our example, Figure 29, the busway is 8.84 in. (225 mm) wide and 5.88 in. (149 mm) high (9 in. x 6 in. (229 mm x 152 mm) nominal).
2. Review the area where the busway could be installed (if not already specified).

   Note special conditions such as building expansion joints, steel changes, HVAC equipment, and plumbing lines.
3. Measure all dimensions from fixed points.

   Measure dimensions such as columns, walls, or other building structures. Try to leave at least 4 in. (102 mm) between the busway and any obstructions. Figure 30 on page 36 shows the switchboard and MCC locations, the obstructions, and the dimensions to fixed points.
4. Start dimensional layout from the fixed end.

   Sketch the proposed busway routing, noting elevations and obstructions (see Figure 31 on page 37).
5. Route the busway above the bottom of the building steel, unless specified.

   For industrial applications, this protects the busway from damage by forklifts, cranes, etc. The busway must be supported by drop rods or from below. Do not route busway where it cannot be adequately supported.
6. When selecting the elevation for plug-in busway, remember that overcurrent devices (plug-in units) can require different mounting clearances.

   Referring to the sample busway layout (see Figure 31 on page 37), enough information is known to tabulate the amount of busway footage needed and the required fittings (*e.g.*, flanged ends, elbows). A copy of the figure could help your local representative with pricing your job and also could be forwarded to the factory to aid in preparation of approval or record drawings.

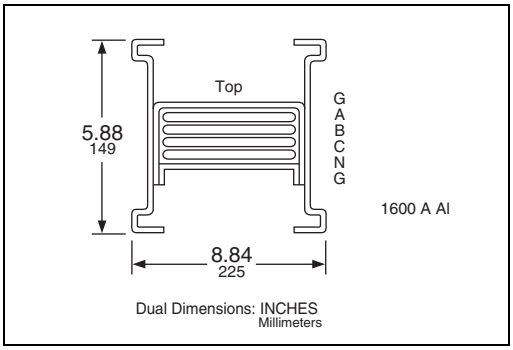

Figure 29: Physical Size of Busway Housing

© 1986–2017 Schneider Electric
All Rights Reserved

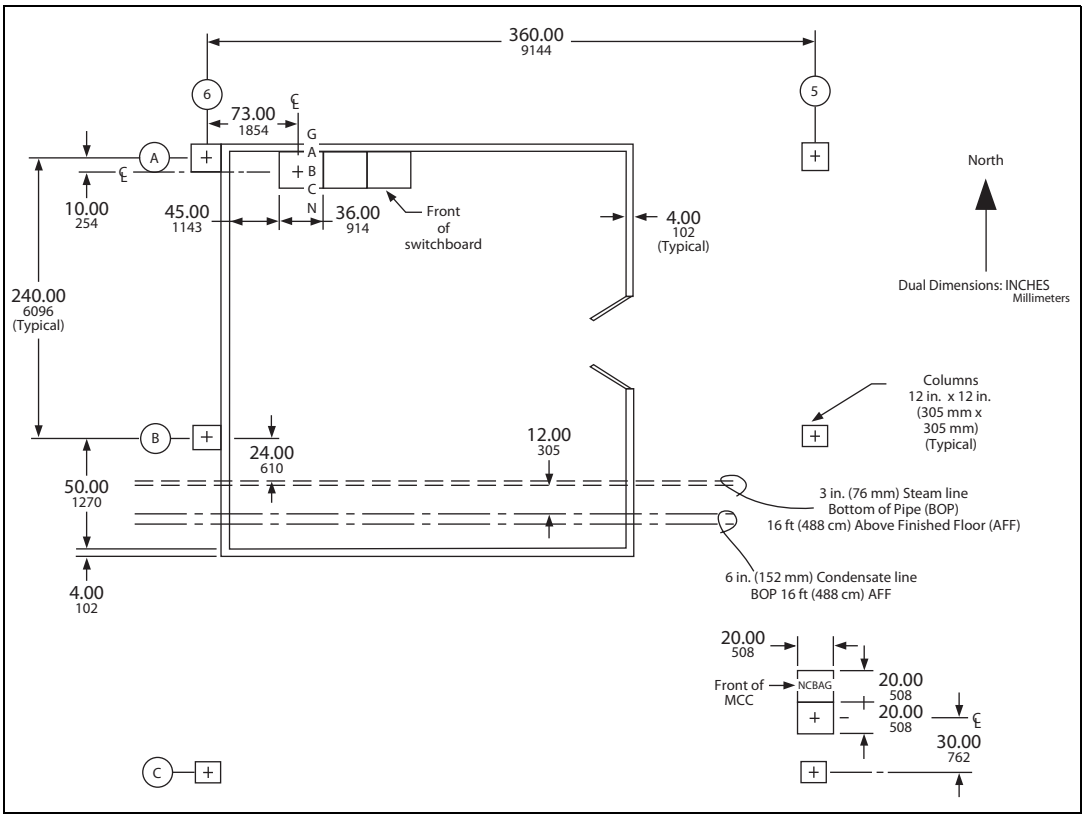

Figure 30: Plan View Switchboard, MCC, and Obstructions

© 1986–2017 Schneider Electric
All Rights Reserved

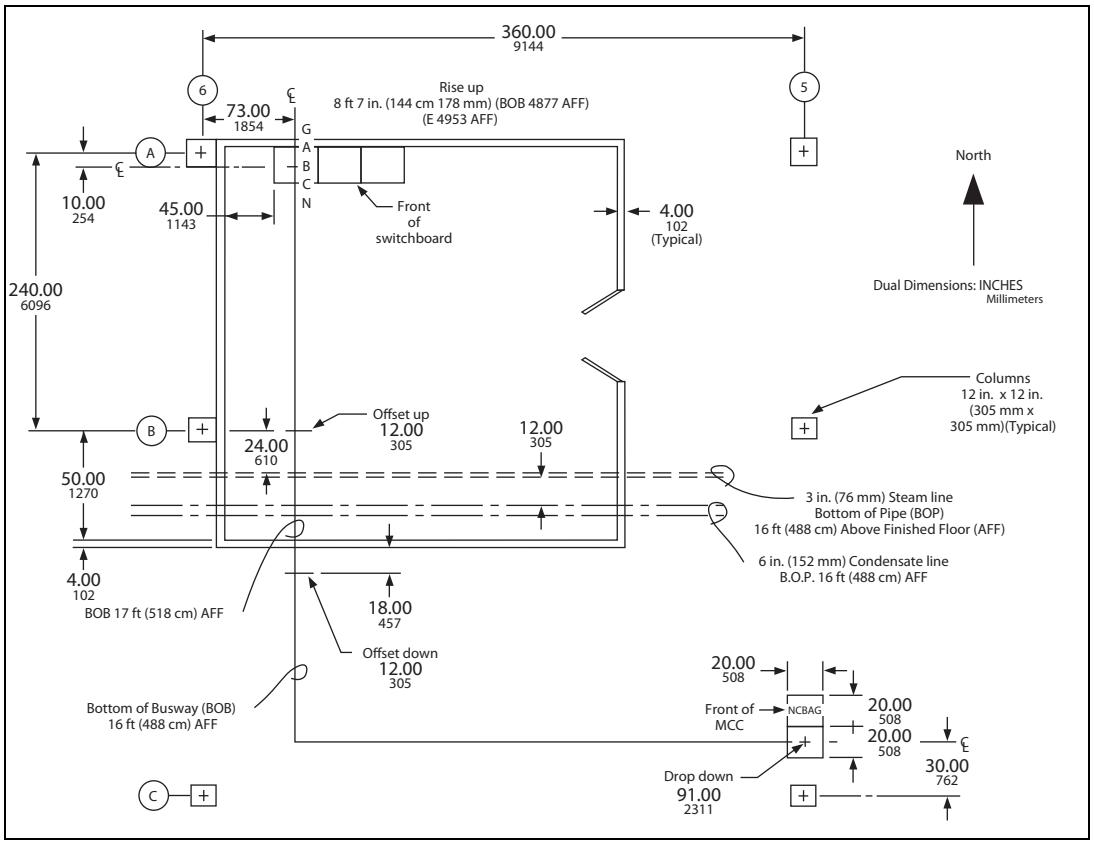

Figure 31: Proposed Busway Layout

© 1986–2017 Schneider Electric
All Rights Reserved

Section 5—I-Line™ Installation, Special Features, and Services

Installation Recommendations

To make the busway installation proceed as quickly and efficiently as possible, a few preliminary steps should be taken.

1. Familiarize yourself with the busway routing. If record drawings were supplied by the factory, have a copy accessible to the installers.
2. Inspect busway for damage when received. Store busway in a clean, dry location.
3. Have the following tools available for the busway installation:

   — 1/2-in. (13 mm) nut driver or socket and rachet
   — Torque wrench or breaker bar with 5/8-inch (16 mm) head
   — 3/4-in. (19 mm) socket for torque wrench or breaker bar
   — Busway assembly tool (AT-2) for 800–5000 A (provided by Schneider Electric)
   — Level
   — 6 ft. tape measure or wooden ruler
   — Busway insulation tester (“megger,” 1000 V recommended)
4. Carefully read the installation instructions for all devices and NEMA Publication BU 1.1 provided with the busway before installing any of the equipment. This will help ensure proper installation and operation procedures are followed for the busway system being installed. Note the instructions call for the busway to be “megger” tested before and after installation.
5. Install busway hangers and supports. The most common method of supporting the busway hangers is threaded drop rods (or all thread), which the installer must supply.
6. Anticipate the weight of the objects being installed so the necessary lifting devices and manpower are available.
7. If any problems are encountered or questions arise, contact your local Schneider Electric representative.
8. Once the installation of the busway is complete, NEMA Publication BU 1.1 should be delivered to the facility owner for his or her use in operating and maintaining the busway system.

Painting Installed Busway Systems

A busway system that includes plug-in units can be painted after installation. However, all precautions must be taken to prevent the paint from coming in contact with conductors and insulation. All nameplates and labels (safety labels, serial number labels, UL labels, etc.) must remain visible and legible.

Hanger Spacing

Normally, the support for outdoor busway is in the form of a customer-supplied T-stand type device. However, hangers are available from Schneider Electric when drop rods can be used.

Maximum support intervals include:

- Vertical mounting
  — indoor–16 ft (488 cm)
  — outdoor–10 ft (305 cm)
- Horizontal mounting
  — indoor–10 ft (305 cm)
  — outdoor–5 ft (152 cm)

© 1986–2017 Schneider Electric
All Rights Reserved

Maintenance Recommendations

⚠ DANGER

HAZARD OF ELECTRIC SHOCK, EXPLOSION, OR ARC FLASH

- Apply appropriate personal protective equipment (PPE) and follow safe electrical work practices. See NFPA 70E, NOM-029-STPS-2011, and CSA Z462.
- This equipment must be installed and serviced only by qualified personnel.
- Perform such work only after reading and understanding all of the instructions contained in this bulletin.
- Turn off all power supplying this equipment before working on or inside equipment.
- Before performing visual inspections, tests, or maintenance on this equipment, disconnect all sources of electric power. Assume all circuits are live until they are completely de-energized, tested, and tagged. Pay particular attention to the design of the power system. Consider all sources of power, including the possibility of backfeeding.
- Always use a properly rated voltage sensing device to confirm power is off.
- Handle this equipment carefully and install, operate, and maintain it correctly in order for it to function properly. Neglecting fundamental installation and maintenance requirements may lead to personal injury, as well as damage to equipment or other property.
- Disconnect the neutral connection at any Surge Protective Device (SPD) or other electronic device prior to performing electrical insulation resistance tests; reconnect to the device after testing.
- Carefully inspect your work area and remove any tools and objects left inside the equipment.
- Replace all devices, doors, and covers before turning on power to this equipment.
- All instructions in this bulletin assume that the customer has taken these measures before performing maintenance or testing.

Failure to follow these instructions will result in death or serious injury.

Figure 32: General Danger Safety Label

NEMA Publication BU 1.1 is provided with each busway project as a guide for proper installation, operation, and maintenance of busway products. This publication addresses such areas as inspection of all electrical joints and terminals for tightness, preventing the entry of water and contaminants into the busway, instructions for what to do if water and contaminants do enter the busway, and other maintenance topics. This publication is also available upon request by contacting your local Schneider Electric representative.

Other publications Schneider Electric recommends to help ensure the highest quality of product performance are as follows:

— NFPA 70–National Electrical Code (U.S.)
— NFPA 70B–Maintenance of Electrical Equipment
— NEMA BU 1–Busway Standard published by the National Electrical Manufacturers Association
— CSA C22.1–Canadian Electrical Code, Part 1

© 1986–2017 Schneider Electric
All Rights Reserved

Special Busway Construction

This section outlines requirements for busways with features other than our standard.

Special Paint

I-Line™ busway can be provided in colors other than ANSI 49 gray for an additional fee. The special color requested should be specified by an ANSI color code at the time of order entry. With typically lengthened lead times for special color parts, it is imperative to provide this information as early as possible in the order process so delivery commitments can be met.

Low Current Density Busway

Some customers require a lower current density busway than our standard for rigorous duty in their installation. Schneider Electric has developed a range of busway for the most commonly requested current density of 1000 A per square inch for copper busway and 750 A per square inch for aluminum busway. If you require this current density for your installation, specify it, and we can meet your need. If you have requests for another specific current density, contact your local Schneider Electric representative.

Riser Plug-In Busway

Schneider Electric also offers an I-Line II plug-in busway specifically designed for installation in riser closets of high-rise buildings. This plug-in busway has a plug-in door on the front side that faces out into the room. The back of the busway, which faces the wall, is blanked off with a feeder bus side rail.

This design provides a plug-in busway ideally suited for riser cabinets and gives the customer only the necessary plug-in openings. The catalog number for this device is the same as our plug-in busway, except an R is substituted for the P. (Example: if the standard plug-in busway prefix is AP2512G, the riser busway prefix is AR2512G.)

Splash Resistant Busway

Some indoor busway is subject to occasional water exposure, such as roof leaks or sprinklers. While this application does not require the full protection of outdoor busway, additional protection is needed for the indoor busway. The splash resistant feature is tested to the International IEC 60529 standard and is rated as IP54. This rating specifies protection from dust (“limited ingress permitted with no harmful deposits”) and water (“splashed from all directions with limited ingress permitted”).

This feature is available as an option with indoor plug-in and feeder busway. It is identified by the addition of “M54” at the end of the standard catalog number.

Harmonic Busway

To properly allow for the impact of total harmonic distortion (THD), a busway solution must address both the current capacity of the neutral and the ability to dissipate the heat generated with the maximum anticipated load. The increased neutral currents will result in additional heating of all phase conductor bars, therefore de-rating of the busway is necessary.

With the Schneider Electric harmonic busway solutions, the neutral is sized to carry the full current of the expected harmonic load, while the increased cross section of the phase conductors dissipates the added heat generated within the busway.

There are two harmonic busway offers available:

- **15%<THD<35%** rating (letter X in the catalog number)
- **THD>35%** rating (letter Y in the catalog number)

For example, if the standard busway prefix is AP2512G, the THD>35% harmonic busway prefix is APY2512G.

© 1986–2017 Schneider Electric
All Rights Reserved

Seismically Qualified Busway

I-Line busway has been seismically qualified to meet the seismic provisions of the International Building Code (IBC), California Building Code (CBC), and ASCE/SEI 7 based on triaxial shake table testing following the code recognized test protocol ICC ES AC156. All qualification shake table testing was conducted by an independent test facility to verify compliance to an $I_p = 1.5$ by verifying post test equipment functionality as required by ASCE 7 for equipment that is part of a seismic designated system.

The shake table earthquake simulation subjected the busway test specimens to dynamic demands that can be more severe than the earthquake codes for most locations. A certificate of self certification is available on request from your local sales office and is based on site-specific, code-defined, seismic demand requirements for the installed location information supplied to Schneider Electric.

The qualified busway equipment must be installed, anchored, and restrained in accordance with Schneider Electric installation guidelines. For the purpose of seismic restraint design, the center of gravity is centrally located for all outside linear dimensions for each section or device (as listed along with their respective weights). Anchorage of equipment to the primary building structure is required to validate seismic certification of the equipment. The structural engineer or design engineer of record is responsible for design of the code compliant seismic restraint system for the building equipment. Schneider Electric is not responsible for the specification and performance of seismic restraint and anchorage systems.

Services

Schneider Electric offers a wide range of services to make the use of I-Line busway as simple as possible. A summary of these services follows:

Busway Measuring and Layout Service

Schneider Electric can provide full-site measuring and coordination of a busway installation. This service is ideal for large complicated projects requiring close coordination with other services. This service must be requested at the time of specification and order entry. Refer requests for this service to your local Schneider Electric representative.

Emergency Service

Trained and qualified busway personnel are on call 24 hours a day to assist in your emergency busway needs. Call Schneider Electric at 1-888-778-2733.

© 1986–2017 Schneider Electric
All Rights Reserved

"Missing Link" Program

The "Missing Link" program is designed specifically to help a customer correct last minute changes to a project using busway. Those changes could include an unplanned obstruction requiring the busway to be rerouted, incorrect measurement of the busway run, or the need to order additional pieces to supplement busway previously ordered. The program applies to the United States, Canada, and Mexico, and guarantees shipment of factory-built busway in five to seven working days, or Schneider Electric pays for the premium freight. For complete details of the program, contact Schneider Electric at 1-888-778-2733.

How To Properly Measure Your Missing Link Dimensions

All missing link dimensions should be measured to the nearest whole inch from centerline of joint to centerline of joint, or centerline of joint to centerline of busway.

As shown in Figure 33, diagram "A–Straight Lengths," the centerline of the joint is located at the joint bolt on the end with a joint pack installed. If the joint pack is not installed, the centerline of the joint is one inch (25 mm) from the end of the bus bars.

If it is necessary to measure an elbow, the dimensions X and Y (shown in Figure 33, diagram "B–Elbows") are all that's needed. Be sure to measure from centerline of joint (as described above) to centerline of busway housing. You must also specify whether an edgewise or flatwise elbow is required. Table 41 on page 77 lists the standard minimum elbow dimensions for each amperage.

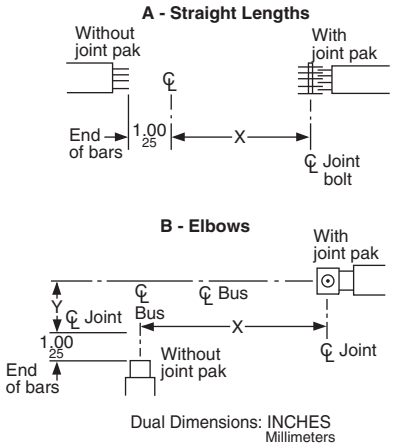

Figure 33: Missing Link Dimensions

© 1986–2017 Schneider Electric
All Rights Reserved

Section 6—I-Line™ Electrical Data

Electrical Data

- **Standards:** UL857 (File Number E22182); CSA C22.2 No. 27-1973 (File Number LL-61778)
- **Systems:** AC–3Ø3W, 3Ø4W, 1Ø2W, 1Ø3W, DC-2 Pole. All neutrals are 100% capacity.
- **Voltage:** 600 Volts AC/DC, 50 Hz and 60 Hz
- **Ground:** 50% capacity as standard for 800–5000 A, as an option on 225–600 A
- **Enclosure:** Indoor and outdoor (800–5000 A only)

NOTE: All values are for thermal rated busway. Contact Schneider Electric for other options such as low current density rated, harmonic rated, and IP54 rated.

Short Circuit Ratings

Table 1: Short Circuit Ratings: UL 3-Cycle Test (kA, RMS Symmetrical)

Ampere Rating	Aluminum				Copper			
	AOF2 / AF2	AOFH2 / AFH2	AP / AP2	APH / APH2	COF2 / CF2	COFH2 / CFH2	CP / CP2	CPH / CPH2
225	—	—	22	—	—	—	22	—
400	—	—	22	42	—	—	22	42
600	—	—	22	42	—	—	22	42
800	50	85	50	75	50	85	50	75
1000	50	100	50	100	50	85	50	75
1200	50	100	50	100	50	100	50	100
1350	50	100	50	100	50	100	50	100
1600	50	100	50	100	50	100	50	100
2000	100	150	125	150	50	100	65	100
2500	100	150	125	150	100	150	125	150
3000	100	150	125	150	100	150	125	150
3200	—	—	—	—	100	150	125	150
4000	150	200[1]	200	—	150	200[1]	200	—
5000	—	—	—	—	150	200[1]	200	—

[1] Certain fittings are UL rated at 150 kA RMS symmetrical.

Table 2: Short Circuit Ratings: 6-Cycle and 30-Cycle Tests (kA, RMS Symmetrical)

Ampere Rating	Aluminum				Copper			
	AF2, AOF2, AP2		AFH2, AOFH2, APH2		CF2, COF2, CP2		CFH2, COFH2, CPH2	
	6-Cycle	30-Cycle	6-Cycle	30-Cycle	6-Cycle	30-Cycle	6-Cycle	30-Cycle
800	42	35	75	52	42	35	65	45
1000	50	35	100	70	50	35	75	52
1200	50	35	100	70	50	35	100	70
1350	50	35	100	70	50	35	100	70
1600	50	35	100	70	50	35	100	70
2000	100	70	150	105	50	35	100	70
2500	100	70	150	105	100	70	150	105
3000	100	70	150	105	100	70	150	105
3200	—	—	—	—	100	70	150	105
4000	150	105	200[1]	140[1]	150	105	200[1]	140[1]
5000	—	—	—	—	150	105	200[1]	140[1]

[1] Certain fittings are rated at 150 kA and 105 kA (RMS symmetrical).

© 1986–2017 Schneider Electric
All Rights Reserved

Table 3: Short Circuit Ratings: KA, RMS Symmetrical (Series Connected with a Fuse)

Ampere Rating	Aluminum				Copper			
	AF2	AFH2	AP / AP2	APH / APH2	CF2	CFH2	CP / CP2	CPH / CPH2
225	—	—	200	—	—	—	200	—
400	—	—	100	200	—	—	100	200
600	—	—	50	200	—	—	50	200
800	100	200	200	200	100	200	200	200
1000	100[1]	200[1]	100[1]	200[1]	100[1]	200[1]	200[1]	200[1]
1200	100	200	100	200	100	200	100	200
1350	100[2]	200[2]	100[2]	200[2]	100[2]	200[2]	100[2]	200[2]
1600	100	200	100	200	100	200	100	200
2000	—	200	200	200	—	200	100	200
2500	—	—	200	200	—	200	200	200
3000	—	—	200	200	—	—	200	200
3200	—	—	—	—	—	—	200	200
4000	200	—	—	—	200	—	—	—
5000	—	—	—	—	200	—	—	—

NOTE: 225–600 A busway are connected in series with a Class J or T fuse; 800–5000 A are connected in series with a Class L fuse. All ratings are tested in compliance with UL/CSA standards. All ratings apply for three-pole and four-pole busway.

1 A 1200 A fuse is used in series.

2 A 1600 A fuse is used in series.

Table 4: I-Line Short Circuit Ratings: KA, RMS Symmetrical (Series Connected with a Breaker)[1]

Ampere Rating	ANSI Circuit Breaker	Aluminum								Copper							
		AF2		AFH2		AP2		APH2		CF2		CFH2		CP2		CPH2	
		480 V Max.	600 V Max.	480 V Max.	600 V Max.	480 V Max.	600 V Max.	480 V Max.	600 V Max.	480 V Max.	600 V Max.	480 V Max.	600 V Max.	480 V Max.	600 V Max.	480 V Max.	600 V Max.
800	—	—	—	—	—	—	—	—	—	—	—	—	—	—	—	—	—
1000	NW16L1	—	—	200	130	—	—	200	130	—	—	—	—	—	—	—	—
1200		—	—	200	130	—	—	200	130	—	—	200	130	—	—	200	130
1350		—	—	200	130	—	—	200	130	—	—	200	130	—	—	200	130
1600		—	—	200	130	—	—	200	130	—	—	200	130	—	—	200	130
2000	NW20L1	—	—	200	130	—	—	200	130	—	—	200	130	—	—	200	130
2500	—	—	—	—	—	—	—	—	—	—	—	—	—	—	—	—	—
3000	—	—	—	—	—	—	—	—	—	—	—	—	—	—	—	—	—
4000	—	—	—	—	—	—	—	—	—	—	—	—	—	—	—	—	—
5000	—	—	—	—	—	—	—	—	—	—	—	—	—	—	—	—	—

1 To maintain the short circuit rating of the system, fully rated plug-in units must be used or a system short circuit study must be made to determine the required interrupt ratings of any plug-in units.

© 1986–2017 Schneider Electric
All Rights Reserved

Impedance Values

Table 5: Line-to-Neutral (Milliohms Per 100 Feet)

Ampere Rating	Aluminum Busway			Copper Busway		
	R	$X_{60\ Hz}$	$X_{50\ Hz}$	R	$X_{60\ Hz}$	$X_{50\ Hz}$
225	7.30	3.42	2.85	4.06	3.75	3.12
400	3.71	2.60	2.17	2.13	2.30	1.92
600	2.04	1.59	1.32	2.13	2.30	1.92
800	2.67	0.91	0.76	1.86	1.10	0.92
1000	2.15	0.74	0.62	1.92	1.07	0.89
1200	1.62	0.60	0.50	1.52	0.92	0.76
1350	1.36	0.53	0.44	1.17	0.75	0.62
1600	1.20	0.50	0.42	1.04	0.69	0.58
2000	0.99	0.41	0.34	0.84	0.54	0.44
2500	0.85	0.35	0.29	0.60	0.42	0.35
3000	0.61	0.26	0.22	0.53	0.37	0.31
3200	—	—	—	0.48	0.32	0.27
4000	0.44	0.15	0.13	0.39	0.23	0.19
5000	—	—	—	0.28	0.19	0.15

NOTES:

1. For optimized values on a specific application, contact your local Schneider Electric Representative.
2. Impedance values are for busway operating at 176 °F (80 °C) temperature.

Table 6: Resistance Values for Aluminum Integral Ground Bus

Ampere Rating 3Ø3W and 3Ø4W	DC Resistance (Milliohms per 100 Feet)	
	Aluminum Phase Conductors	Copper Phase Conductors
225	8.1	8.1
400	6.4	6.4
600	5.3	6.4
800	4.0	4.4
1000	3.5	4.0
1200	3.2	3.5
1350	3.0	3.4
1600	2.8	3.0
2000	2.2	3.0
2500	2.0	2.2
3000	1.8	2.0
3200	—	1.7
4000	1.7	1.7
5000	—	1.7

NOTE: Resistance values are for integral ground bus operating at 176 °F (80 °C) temperature.

© 1986–2017 Schneider Electric
All Rights Reserved

Voltage Drop Data (60 Hz At Rated Load)

The values expressed below are based on a single concentrated load at the end of the busway run. For distributed loading, divide the values shown by two (2).

Table 7: Power Factor–Average Phase Line-To-Line Voltage Drop in Volts Per 100 ft (3048 cm)

Ampere Rating	Power Factor – Aluminum Busway							Power Factor – Copper Busway						
	100	90	80	70	50	30	20	100	90	80	70	50	30	20
225	2.84	3.14	3.08	2.94	2.58	2.12	1.87	1.58	2.06	2.14	2.15	2.06	1.87	1.75
400	2.57	3.10	3.14	3.09	2.84	2.49	2.28	1.48	2.02	2.14	2.17	2.12	1.96	1.86
600	2.12	2.63	2.69	2.66	2.49	2.21	2.04	2.21	3.03	3.20	3.26	3.18	2.94	2.79

Table 8: Aluminum Busway–Average Phase Line-to-Line Voltage Drop in Volts Per 100 ft (3048 cm)

Ampere Rating	Aluminum Busway – Power Factor %											
	100	95	90	85	80	75	70	60	50	40	30	20
800	3.70	3.91	3.88	3.81	3.72	3.61	3.49	3.23	2.94	2.64	2.31	1.98
1000	3.72	3.94	3.91	3.84	3.75	3.64	3.52	3.26	2.97	2.66	2.34	2.00
1200	3.37	3.59	3.57	3.52	3.44	3.35	3.25	3.02	2.76	2.49	2.20	1.90
1350	3.18	3.41	3.40	3.36	3.29	3.20	3.11	2.90	2.66	2.41	2.14	1.85
1600	3.33	3.60	3.60	3.56	3.50	3.42	3.32	3.11	2.87	2.60	2.32	2.02
2000	3.42	3.69	3.70	3.65	3.59	3.50	3.41	3.18	2.94	2.66	2.38	2.07
2500	3.68	3.97	3.98	3.93	3.86	3.77	3.66	3.42	3.16	2.87	2.55	2.23
3000	3.17	3.43	3.44	3.41	3.35	3.27	3.19	2.99	2.76	2.51	2.24	1.96
4000	3.07	3.24	3.22	3.16	3.08	2.99	2.89	2.67	2.43	2.18	1.91	1.63

NOTES:

1. For optimized values on a specific application, contact your local Schneider Electric Representative.
2. For balanced 3-phase line-to-line voltage drop 4-wire busway, use values from tables.
3. For balanced 3-phase line-to-neutral voltage drop, multiply values from tables by .577.
4. For single-phase voltage drop, multiply values from tables by 1.15.
5. For other than rated current, multiply values from tables by $\frac{\text{Actual Current}}{\text{Rated Current}}$

   For different lengths, multiply values from 60 Hz tables by $\frac{\text{Actual Footage}}{100\text{ ft}}$
6. Voltage drop calculations for 50 Hz can be made by substituting the appropriate “x” value from page 48 into samples No.1 and 2 above. For other frequency values (*e.g.*, 400 Hz), contact your local Schneider Electric representative for assistance.
7. For plug-in distributed loads, divide the voltage drop by 2. See IEEE Standard 141-13.8.3.

© 1986–2017 Schneider Electric
All Rights Reserved

Table 9: Cooper Busway–Average Phase Line-to-Line Voltage Drop in Volts Per 100 ft (3048 cm)

Ampere Rating	Copper Busway – Power Factor %											
	100	95	90	85	80	75	70	60	50	40	30	20
800	2.58	2.92	2.98	2.99	2.98	2.94	2.89	2.77	2.61	2.43	2.23	2.01
1000	3.33	3.74	3.80	3.80	3.77	3.72	3.65	3.48	3.27	3.03	2.76	2.48
1200	3.17	3.61	3.69	3.70	3.68	3.64	3.59	3.43	3.24	3.02	2.78	2.51
1350	2.73	3.14	3.22	3.25	3.24	3.21	3.17	3.05	2.89	2.71	2.50	2.27
1600	2.88	3.33	3.43	3.46	3.45	3.43	3.38	3.26	3.10	2.91	2.69	2.45
2000	2.90	3.34	3.42	3.45	3.44	3.41	3.36	3.23	3.06	2.87	2.65	2.40
2500	2.62	3.06	3.15	3.19	3.19	3.17	3.13	3.03	2.88	2.71	2.52	2.31
3000	2.76	3.23	3.33	3.37	3.37	3.35	3.32	3.21	3.06	2.88	2.68	2.45
3200	2.65	3.06	3.15	3.17	3.17	3.14	3.10	2.99	2.84	2.67	2.47	2.25
4000	2.72	3.09	3.15	3.16	3.14	3.11	3.05	2.92	2.75	2.56	2.35	2.12
5000	2.40	2.78	2.86	2.89	2.89	2.87	2.83	2.73	2.60	2.44	2.26	2.06

NOTES:

1. For optimized values on a specific application, contact your local Schneider Electric Representative.
2. For balanced 3-phase line-to-line voltage drop 4-wire busway, use values from tables.
3. For balanced 3-phase line-to-neutral voltage drop, multiply values from tables by .577.
4. For single-phase voltage drop, multiply values from tables by 1.15.
5. For other than rated current, multiply values from tables by $\frac{\text{Actual Current}}{\text{Rated Current}}$
   For different lengths, multiply values from 60 Hz tables by $\frac{\text{Actual Footage}}{100\text{ ft}}$
6. Voltage drop calculations for 50 Hz can be made by substituting the appropriate “x” value from page 48 into samples No.1 and 2 above. For other frequency values (*e.g.*, 400 Hz), contact your local Schneider Electric representative for assistance.
7. For plug-in distributed loads, divide the voltage drop by 2. See IEEE Standard 141-13.8.3.

© 1986–2017 Schneider Electric
All Rights Reserved

Voltage Drop Sample Calculations (60 Hz)

Sample No. 1	Sample No. 2
1000 A aluminum busway at 50% power factor–60 Hz	1000 A copper busway at 50% power factor–60 Hz
Voltage Drop	Voltage Drop
$=\sqrt{3}\ I\ (R \cos Ø + x \sin Ø)$	$=\sqrt{3}\ I\ (R \cos Ø + x \sin Ø)$
$=\sqrt{3}$ X 1000 (.00215 x .50 + .00074 x .866)	$=\sqrt{3}$ X 1000 (.00163 x .50 + .00096 x .866)
=2.97 Volts/100 ft = concentrated load	=2.85 Volts/100 ft = concentrated load
	$=\frac{2.85}{2}$ = 1.43 Volts/100 ft = distributed load

© 1986–2017 Schneider Electric
All Rights Reserved

Section 7—I-Line™ 225–600 A Busway

I-Line™ 225–600 A Busway Catalog Numbering System

Catalog numbers are composed of two basic parts—the **prefix** (shown below), plus the **suffix** of each individual busway component from pages 50–55.

The **prefix** contains necessary busway information except individual component descriptive details that are defined as the **suffix**. The catalog number **prefix** will generally remain unchanged throughout a busway run while the **suffix** will vary with each individual length or fitting selected.

A few devices, such as hangers, wall flanges, etc., do not follow the exact pattern described above. For these exceptions, a complete listing of device catalog numbers is shown with the individual device drawing(s) on pages 51 and 56–62.

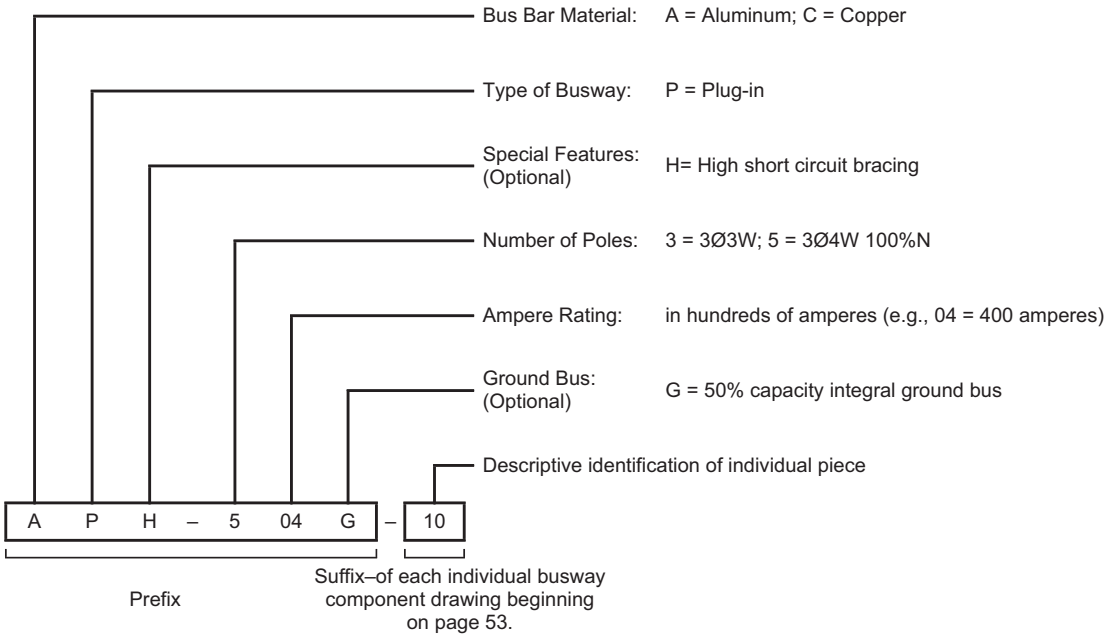

Figure 34: I-Line 225–600 A Busway Catalog Numbering System

© 1986–2017 Schneider Electric
All Rights Reserved

Straight Lengths

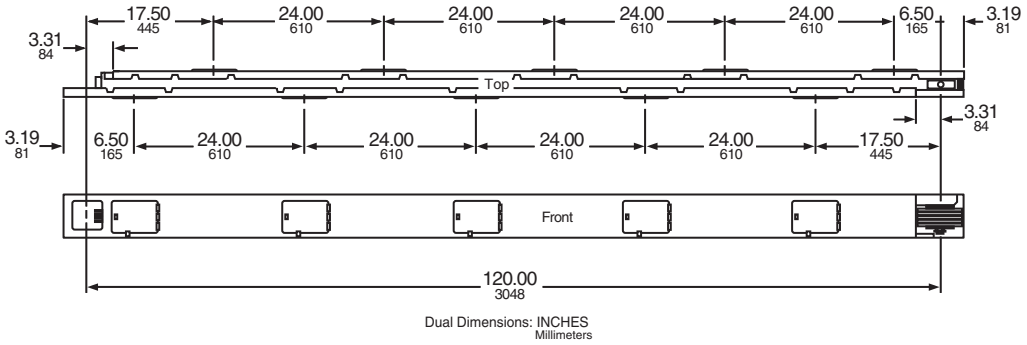

Catalog Number Suffix	-10	-8	-6	-4
Standard Length–Feet	10	8	6	4
Standard Length–Meters	3.05	2.44	1.83	1.22
Number of Plug-In Openings	10	8	6	4

Figure 35: Straight Lengths Dimensions

NOTE: Variable length devices will not have plug-in openings.

Cross Section

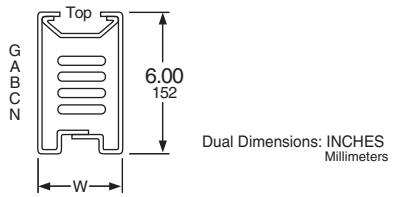

Cross Section Dimensions

Table 10: Cross-Section–Aluminum Content and Weight

Aluminum Ampere Rating	Width		Bus Bars Per Phase		Approximate Weights			
					3-Pole		4-Pole	
	IN	mm	IN	mm	Lb/Ft	kg/m	Lb/Ft	kg/m
225	2.25	57	(1) .25x0.94	(1) 6x24	6	9	6	10
400	3.38	86	(1) .25x2.00	(1) 6x51	7	11	8	12
600	4.75	121	(1) .25x3.38	(1) 6x86	9	14	11	16

Table 11: Cross-Section–Copper Content and Weight

Copper Ampere Rating	Width		Bus Bars Per Phase		Approximate Weights			
					3-Pole		4-Pole	
	IN	mm	IN	mm	Lb/Ft	kg/m	Lb/Ft	kg/m
225	2.25	57	(1) .25x0.94	(1) 6x24	8	10	9	10
400	3.38	86	(1) .25x2.00	(1) 6x51	12	18	14	21
600	3.38	86	(1) .25x2.00	(1) 6x51	12	18	14	21

© 1986–2017 Schneider Electric
All Rights Reserved

Joint Detail

Figure 36: Joint Detail

Cable Tap Boxes (Plug-In)

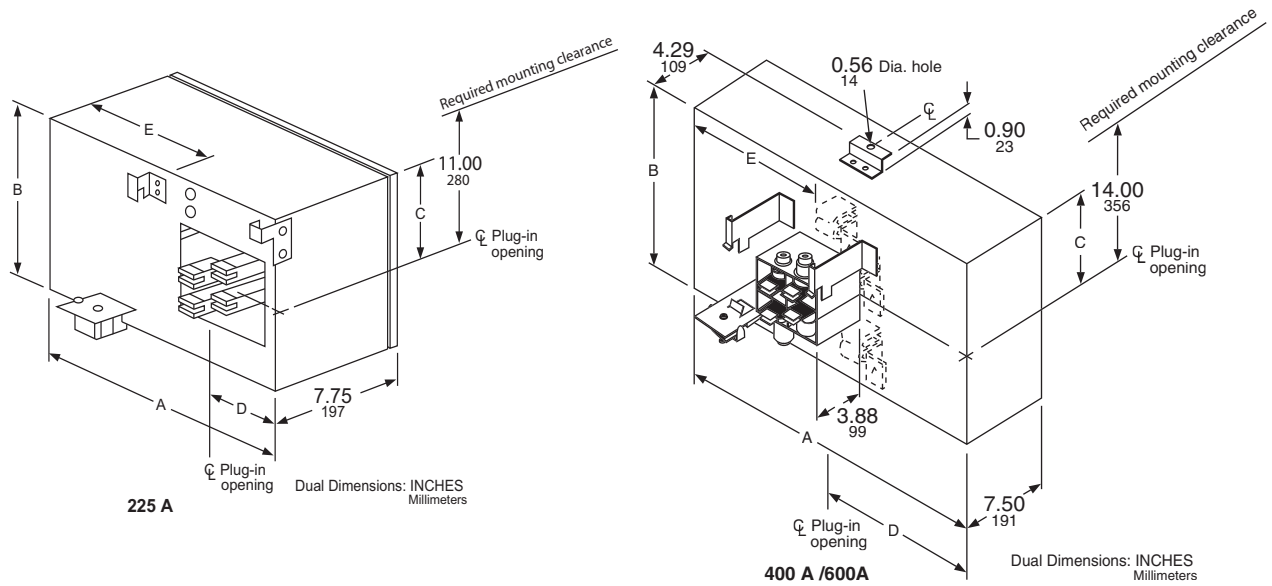

Figure 37: Cable Tap Boxes (Plug-In)

Table 12: Cable Tap Boxes (Plug-In)—Dimensions and Other Specifications

Ampere Rating	A		B		C		D		E[1]		Lugs Per Phase and Neutral	Ground Lug	Catalog Number (With Ground Bus)			
	IN	mm	IN	mm	IN	mm	IN	mm	IN	mm			3-Pole	Weight	3Ø4W 100% N	Weight
225	16.38	416	8.42	216	3.90	100	3.30	83	9.45	267	1-300 kcmil	1 – #6-2/0	PTB-302G	18.25 lb	PTB-502G	19.00 lb
400	25.95	659	18.44	468	9.76	248	7.50	191	14.00	356	2-600 kcmil	2 – 1/0 kcmil	PBTB-306G	60.00 lb	PBTB-506G	62.00 lb
600	25.95	659	18.44	468	9.76	248	7.50	191	14.00	356	2-600 kcmil	2 – 1/0 kcmil	PBTB-306G	60.00 lb	PBTB-506G	62.00 lb

[1] Lugs in plug-in tap boxes can be reversed in field so that ends of lugs point in opposite direction from that shown on drawing (400 A and 600 A only).

© 1986–2017 Schneider Electric
All Rights Reserved

Cable Tap Boxes (End)

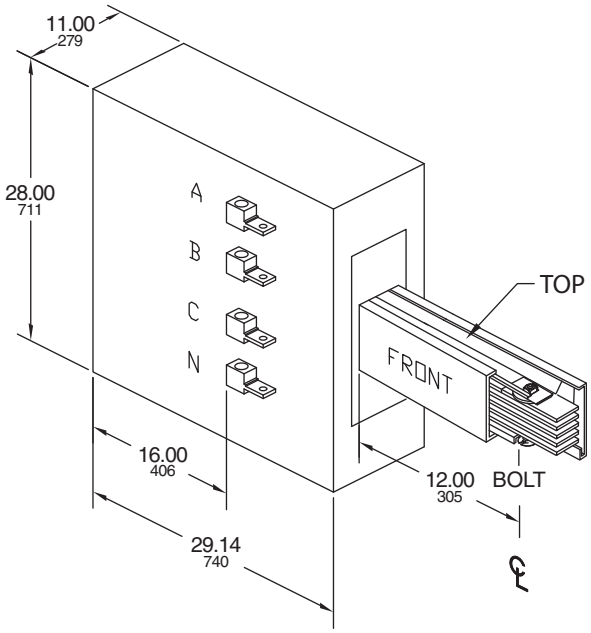

Bolt Suffix 12ETBB

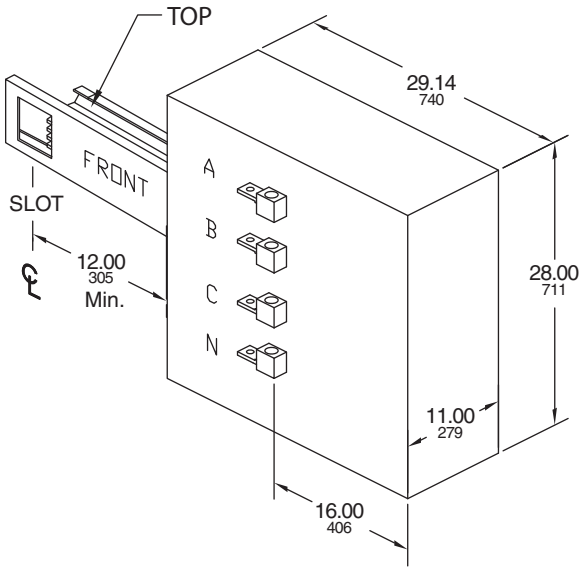

Slot Suffix 12ETBS

Figure 38: Cable Tap Boxes (End)

Table 13: Cable Tap Boxes (End)—Dimensions and Other Specifications

Ampere Rating	Weight (lbs.)				Lugs Per Phase and Neutral	Ground Lugs
	3-pole		4-pole			
	Aluminum	Copper	Aluminum	Copper	1/0–600 Kcmil	#6–300 Kcmil
225	Contact your Schneider Electric representative for information concerning availability.					
400	156	179	162	195	2	2
600	164	179	173	195	2	2

© 1986–2017 Schneider Electric
All Rights Reserved

Tees

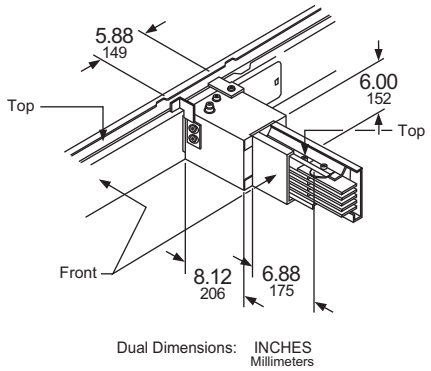

Figure 39: Tees

Table 14: Tees–Application Data

Ampere Rating (Tee Leg)		Catalog Number (Without Ground Bus)		Catalog Number (With Ground Bus)	
Aluminum	**Copper**	**3-Pole**	**3Ø4W 100% N**	**3-Pole**	**3Ø4W 100% N**
225	225	PTT-2-3W	PTT-2-4W	PTT-2-3WG	PTT-2-4WG
400	400	PTT-3-3W	PTT-3-4W	PTT-3-3WG	PTT-3-4WG
—	600	PTT-3-3W	PTT-3-4W	PTT-3-3WG	PTT-3-4WG
600	—	PTT-4-3W	PTT-4-4W	PTT-4-3WG	PTT-4-4WG

Elbows

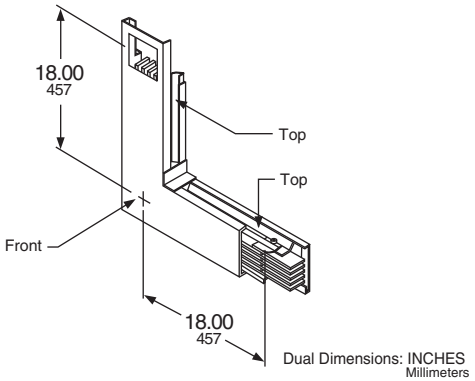

Figure 40: Top Inside Elbow: Catalog No. Suffix–LTI

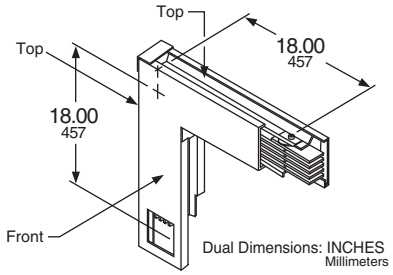

Figure 41: Top Outside Elbow: Catalog Number Suffix–LTO

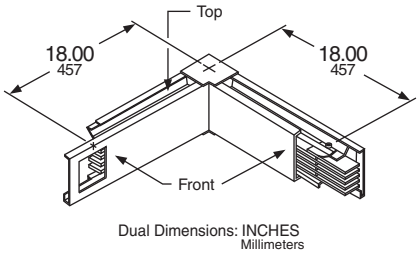

Figure 42: Front Inside Elbow: Catalog Number Suffix–LFI

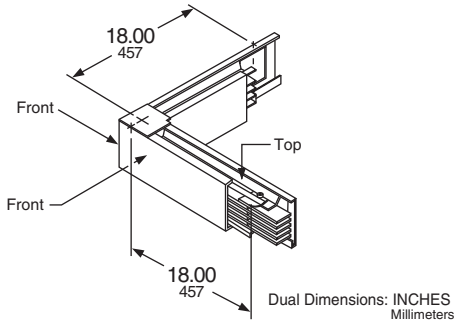

Figure 43: Front Outside Elbow: Catalog Number Suffix–LFO

© 1986–2017 Schneider Electric
All Rights Reserved

Expansion Fitting

Table 15: Expansion Fitting–Application Data

Ampere Rating		A	
Aluminum	Copper	IN	mm
225	225	4.51	114
400	400	5.57	141
—	600	5.57	141
600	—	6.95	176

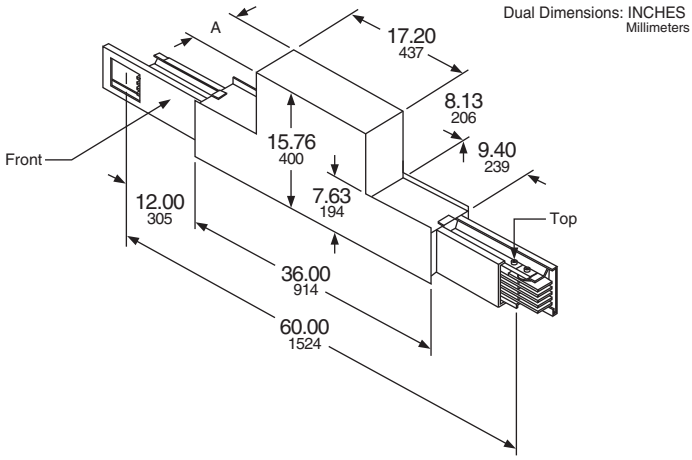

NOTE: Expansion joint permits ± 1.5 in. (± 38 mm) expansion. Use recommended only when busway passes through building expansion joint.

Figure 44: Catalog Number Suffix–EJ Dimensions

Unfused Reducer

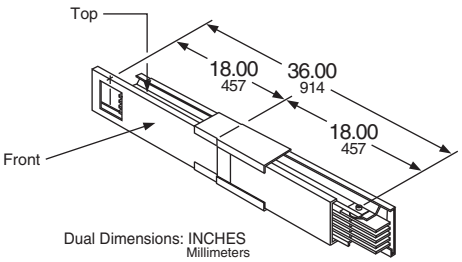

Figure 45: Unfused Reducer Dimensions

Table 16: Unfused Reducer–Catalog Number Suffix

Bolt End Ampere Rating	Slot End Ampere Rating		
	225	400	600
225	—	—	—
400	-R02	—	—
600	-R02	-R04[1]	—

[1] Aluminum busway only.

NOTE: The National Electrical Code states that in Article 368-17(B) overcurrent protection is required where busways are reduced in ampacity except for certain industrial applications.

© 1986–2017 Schneider Electric
All Rights Reserved

Flanged End Cutout and Drilling Template

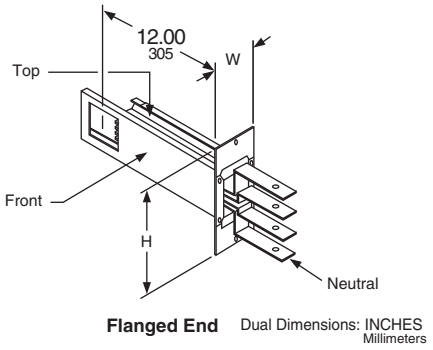

Figure 46: Catalog Number Suffix–FES 12 (Slot End) / FEB 12 (Bolt End)

Table 17: Flanged End–Cutout Dimensions

Ampere Rating		H		W		V		T	
Aluminum	Copper	IN	mm	IN	mm	IN	mm	IN	mm
225	225	13.38	340	4.44	113	2.44	62	3.44	87
400	400	13.38	340	5.50	140	3.50	89	4.50	114
—	600	13.38	340	5.50	140	3.50	89	4.50	114
600	—	13.38	340	6.88	175	4.88	124	5.88	149

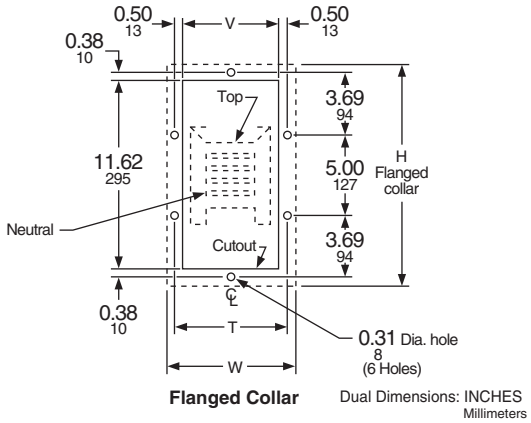

Figure 47: Flanged End Cutout Dimensions

Flanged End Details

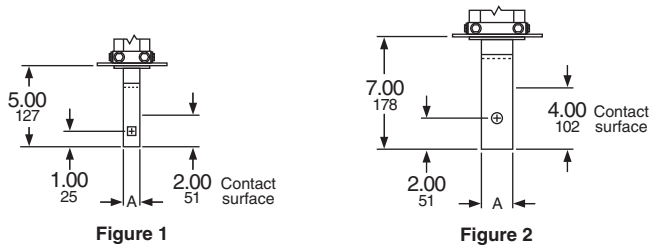

Figure 48: Flanged End Dimensions

Table 18: Flanged End–Dimensions

Ampere Rating		Fig.	A	
Aluminum	Copper		IN	mm
225	225	1	0.94	24
400	400	2	2.00	51
—	600	2	2.00	51
600	—	2	3.38	86

© 1986–2017 Schneider Electric
All Rights Reserved

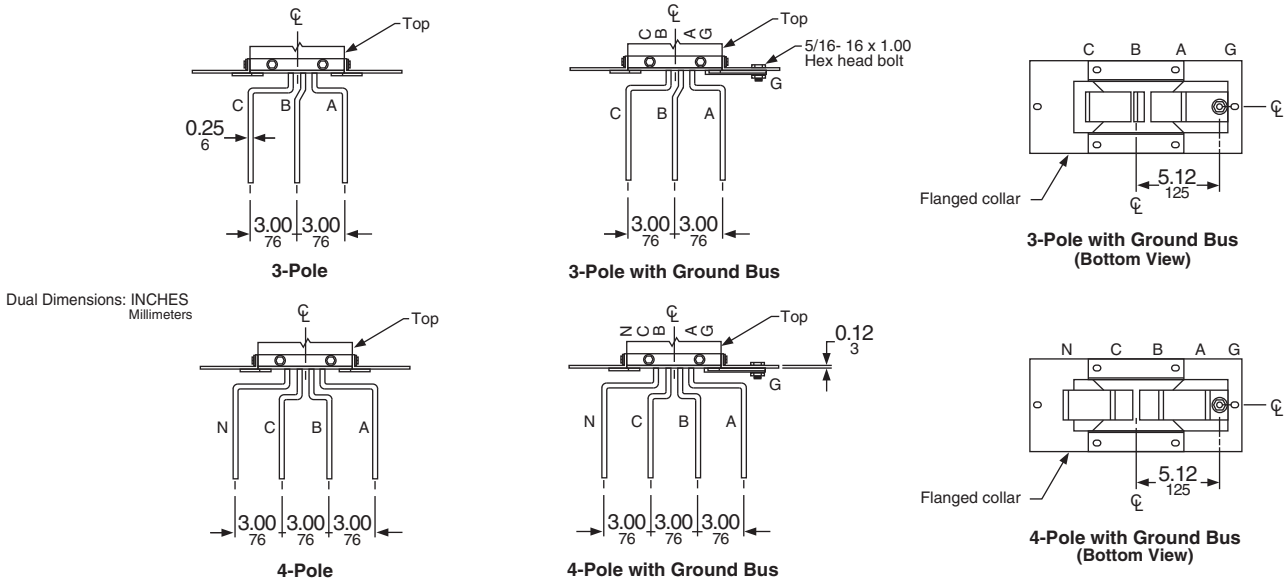

Figure 49: Flanged End Dimensions

Flatwise Hanger

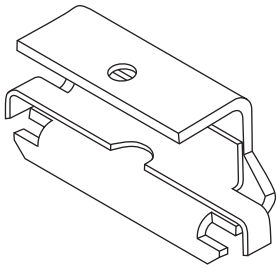

Figure 50: Flatwise Hanger

Table 19: Hanger (Horizontal Flatwise)–Application Data

Ampere Rating		A		B		Catalog Number
Aluminum	Copper	IN	mm	IN	mm	
225	225	2.65	67	1.06	27	HP-2-F
400	400	3.71	94	1.44	36	HP-3-F
—	600	3.71	94	1.44	36	HP-3-F
600	—	5.09	129	2.82	72	HP-5-F

Edgewise Hanger

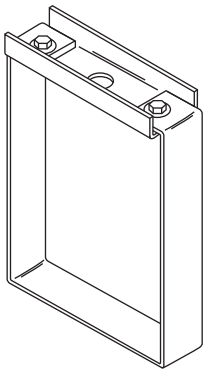

Figure 51: Edgewise Hanger

Table 20: Hanger (Horizontal Edgewise)–Application Data

Ampere Rating		A		B		Catalog Number
Aluminum	Copper	IN	mm	IN	mm	
225[1]	225[1]	6.29	160	3.57	91	HP-3-E
400	400	6.29	160	3.57	91	HP-3-E
—	600	6.29	160	3.57	91	HP-3-E
600	—	7.67	195	4.26	108	HP-5-E

[1] Hanger spacing on 5-foot centers maximum when mounted edgewise.

© 1986–2017 Schneider Electric
All Rights Reserved

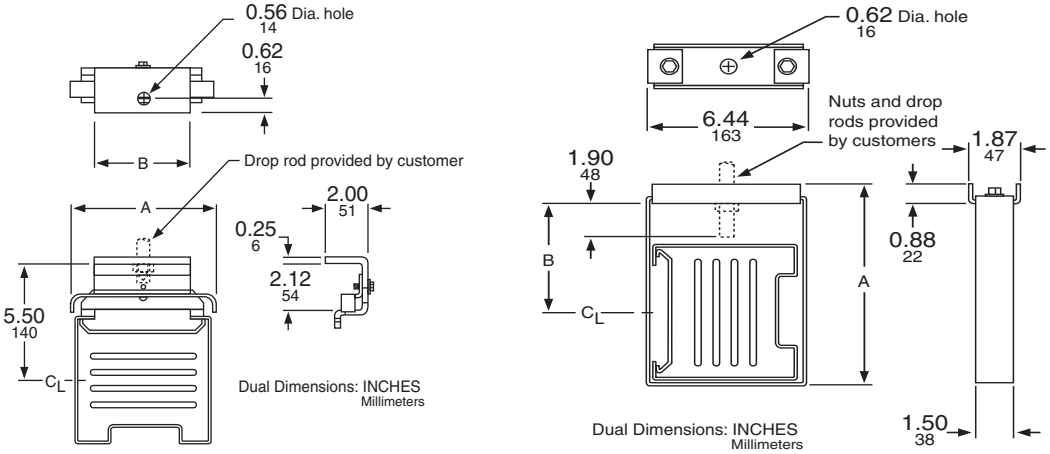

Figure 52: Edgewise Hanger Dimensions

Sway Brace Collar

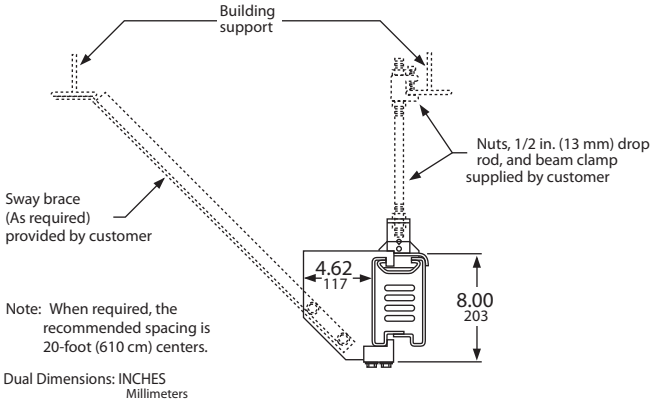

Figure 53: Catalog Number HP-1-SBC Dimensions

Sway braces are used when only one side of the busway is heavily loaded with tap-off units or when other factors could cause possible swaying of the busway.

© 1986–2017 Schneider Electric
All Rights Reserved

Hanger (Vertical Fixed)

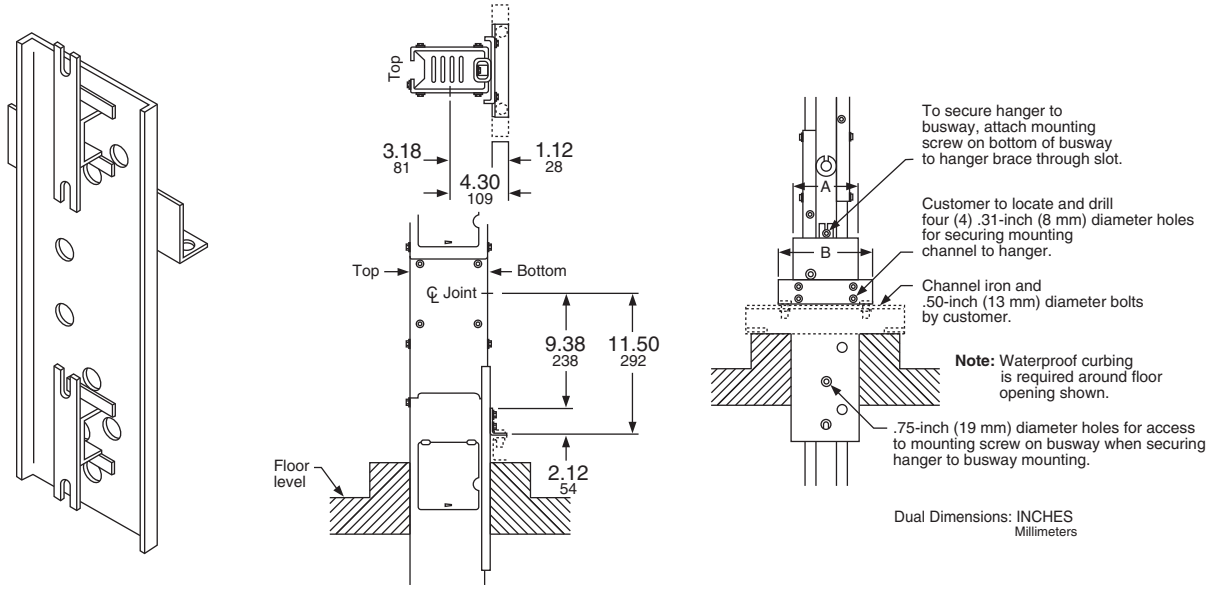

Figure 54: Vertical Fixed Hanger Dimensions

Table 21: Hanger (Vertical Fixed)-–Dimensions and Catalog Numbers

Ampere Rating		A		B		Catalog Number
Aluminum	Copper	IN	mm	IN	mm	
225	225	4.28	109	6.54	166	HP-2-V
400	400	5.32	135	7.58	192	HP-3-V
—	600	5.32	135	7.58	192	HP-3-V
600	—	6.70	170	8.96	228	HP-4-V

NOTE: Dimensions shown apply for 4 ft (122 cm), 6 ft (183 cm), 8 ft (244 cm), and 10 ft (305 cm) straight lengths only. Consult your local Schneider Electric representative for dimensions that apply for fractional straight lengths.

© 1986–2017 Schneider Electric
All Rights Reserved

Hanger (Vertical Spring)

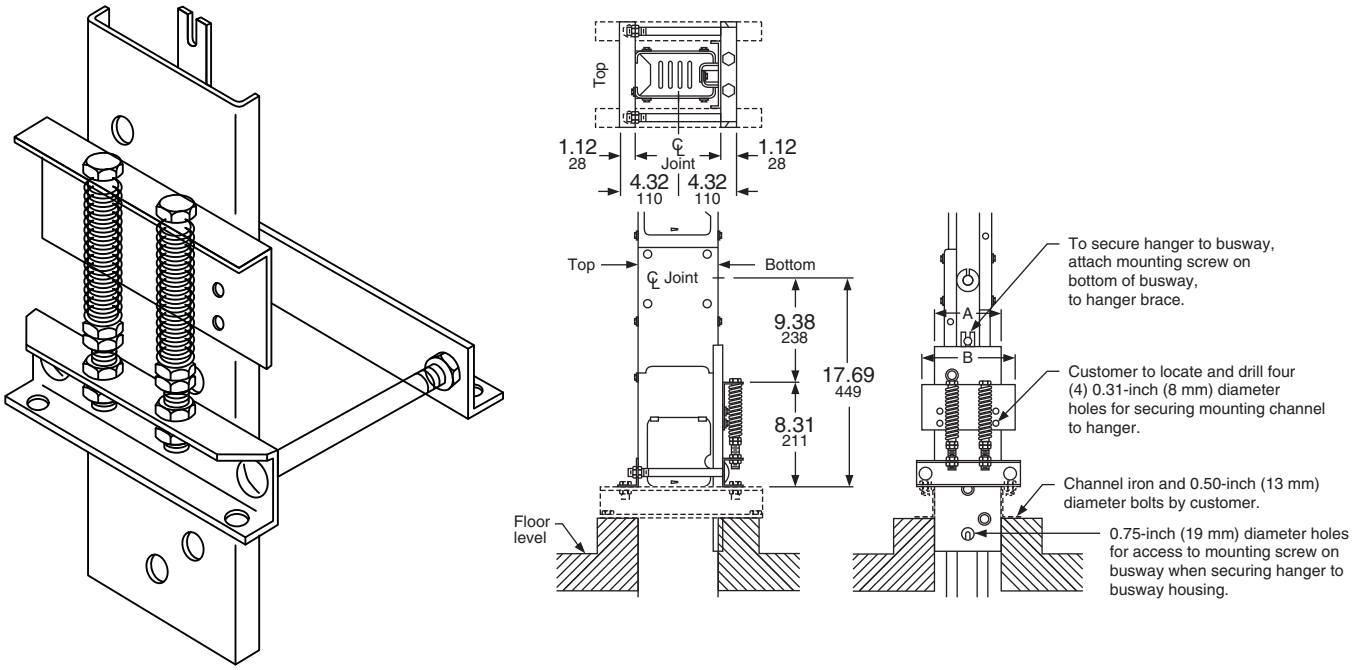

Figure 55: Hanger (Vertical Spring) Dimensions

Table 22: Hanger (Vertical Spring)-–Dimensions and Catalog Numbers

Ampere Rating		A		B		Catalog Number
Aluminum	Copper	IN	mm	IN	mm	
225	225	4.28	109	6.54	166	HP-2-VS
400	400	5.32	135	7.58	192	HP-3-VS
—	600	5.32	135	7.58	192	HP-3-VS
600	—	6.70	170	8.96	228	HP-4-VS

NOTE: Dimensions shown apply for 4 ft (122 cm), 6 ft (183 cm), 8 ft (244 cm), and 10 ft (305 cm) straight lengths only. Consult your local Schneider Electric representative for dimensions that apply for fractional straight lengths.

© 1986–2017 Schneider Electric
All Rights Reserved

Hanger (Horizontal Seismic)

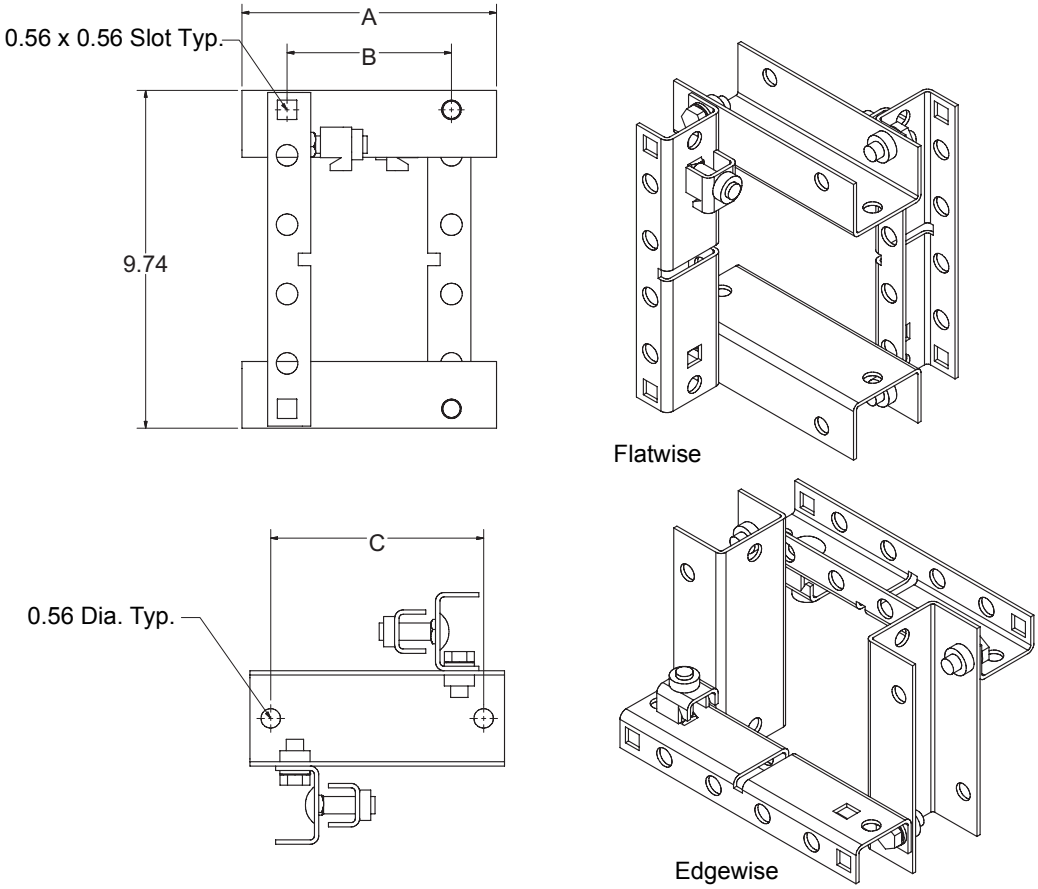

Figure 56: Hanger (Horizontal Seismic) Dimensions

Table 23: Seismic Hanger—Dimensions

Ampere Rating (A)		Catalog Number	A		B		C	
Aluminum	Copper		IN	mm	IN	mm	IN	mm
225	225	HP2SH	6.21	158	3.61	92	5.01	127
400	400 / 600	HP3SH	7.34	186	4.74	120	6.14	156
600	—	HP5SH	8.71	221	6.11	155	7.51	191

NOTE: For seismic applications, seismic hangers must be used for horizontally mounted busway. Standard vertical hangers should be used for vertically mounted busway.

© 1986–2017 Schneider Electric
All Rights Reserved

End Closure

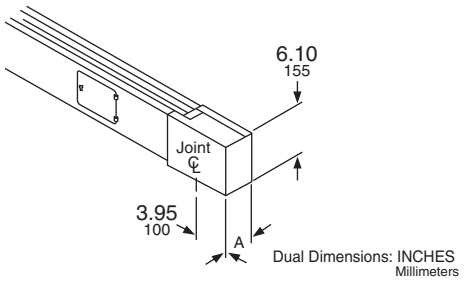

Figure 57: End Closure Dimensions

Table 24: End Closure–Dimensions and Catalog Number

Ampere Rating		A		Catalog Number
Aluminum	Copper	IN	mm	
225	225	2.66	68	ACP-2-EC
400	400	3.52	89	ACP-3-EC
—	600	3.52	89	ACP-3-EC
600	—	4.90	124	ACP-4-EC

Wall and Floor Flange

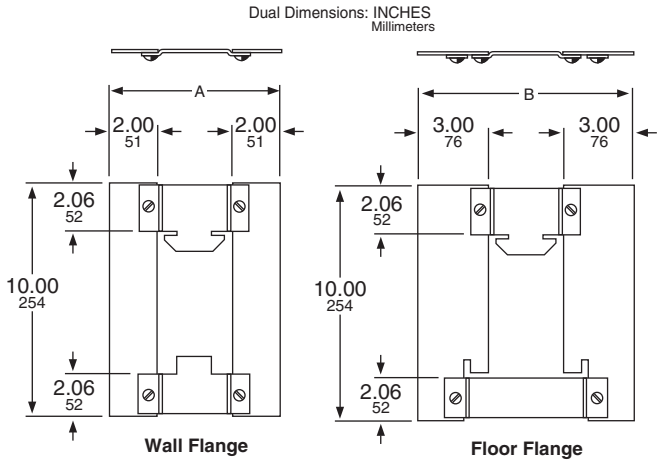

Figure 58: Wall and Floor Flange Dimensions

Table 25: Wall and Floor Flange–Application Data

Ampere Rating		A		B		Catalog Number[1]	
Aluminum	Copper	IN	mm	IN	mm	Wall Flange	Floor Flange
225	225	6.28	160	8.34	212	ACP-2-WF	ACP-2-FF
400	400	7.34	186	9.40	239	ACP-3-WF	ACP-3-FF
—	600	7.34	186	9.40	239	ACP-3-WF	ACP-3-FF
600	—	8.72	221	10.78	274	ACP-4WF	ACP-4-FF

1 Only one flange plate per device catalog number.

© 1986–2017 Schneider Electric
All Rights Reserved

Required Wall and Floor Openings

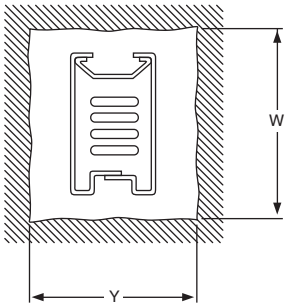

Figure 59: Required Wall and Floor Openings

Table 26: Measurements of Required Wall and Floor Openings

Ampere Rating		Straight Length		Flanged Ends		Flatwise Elbow							Edgewise Elbow						
Al	Cu						Wall Thickness							Wall Thickness					
		Y[1]	W	Y[1]	W	W	4 IN (102 mm)	8 IN (203 mm)	12 IN (305 mm)	16 IN (406 mm)	20 IN (508 mm)	24 IN (610 mm)	Y[1]	4 IN (102 mm)	8 IN (203 mm)	12 IN (305 mm)	16 IN (406 mm)	20 IN (508 mm)	24 IN (610 mm)
							Y[1]							W					
225	225	6 IN (152 mm)	8 IN (203 mm)	6 IN (152 mm)	15 IN (381 mm)	8 IN (203 mm)	8 IN (203 mm)	10 IN (254 mm)	12 IN (305 mm)	14 IN (356 mm)	16 IN (406 mm)	18 IN (457 mm)	6 IN (152 mm)	13 IN (330 mm)	15 IN (381 mm)	17 IN (432 mm)	19 IN (483 mm)	21 IN (533 mm)	23 IN (584 mm)
400	400	7 IN (178 mm)		7 IN (178 mm)			9 IN (229 mm)	11 IN (279 mm)	13 IN (330 mm)	15 IN (381 mm)	17 IN (432 mm)	19 IN (483 mm)	7 IN (178 mm)						
—	600	7 IN (178 mm)		7 IN (178 mm)			9 IN (229 mm)	11 IN (279 mm)	13 IN (330 mm)	15 IN (381 mm)	17 IN (432 mm)	19 IN (483 mm)	7 IN (178 mm)						
600	—	8 IN (203 mm)		8 IN (203 mm)			11 IN (279 mm)	13 IN (330 mm)	15 IN (381 mm)	17 IN (432 mm)	19 IN (483 mm)	21 IN (533 mm)	8 IN (203 mm)						

[1] Dimension allows clearance for vertical hanger. Subtract one inch (25 mm) for horizontal mounted busway.

© 1986–2017 Schneider Electric
All Rights Reserved

Section 8—I-Line™ 800–5000 A Busway

I-Line™ 800–5000 Busway Catalog Numbering System

Catalog numbers are composed of three basic parts: the **prefix** (as shown), the **body**, plus the **suffix** of each individual busway component (see pages 66–90).

- The **prefix** contains the general busway type.
- The **body** contains the number of poles, the amperage, and ground system.
- The **suffix** contains the descriptive identification of the individual device.

The catalog number **prefix** will generally remain unchanged throughout a busway run while the **suffix** will vary with each individual length or fitting selected.

A few devices, such as hangers, wall flanges, etc., do not follow the exact pattern described above. For these exceptions, a complete listing of device catalog numbers is shown with the individual device drawing(s) on pages 91–98.

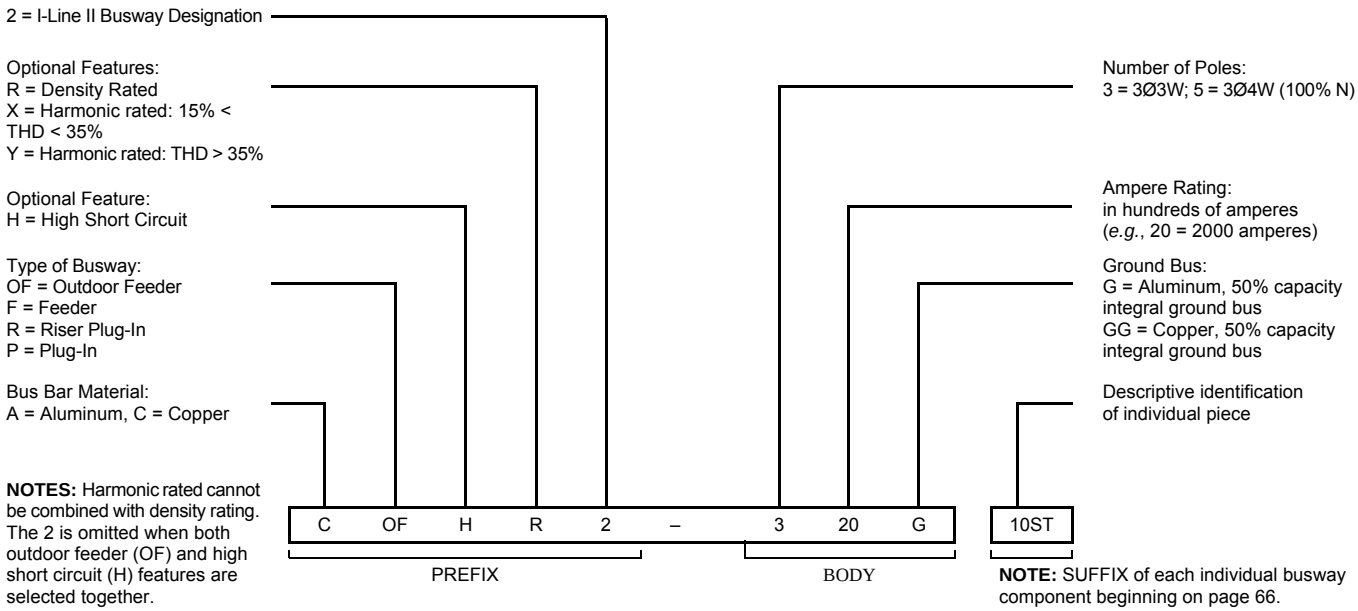

Figure 60: I-Line Busway Catalog Numbering System

© 1986–2017 Schneider Electric
All Rights Reserved

Cross Sections—Plug-In and Indoor Feeder Lengths

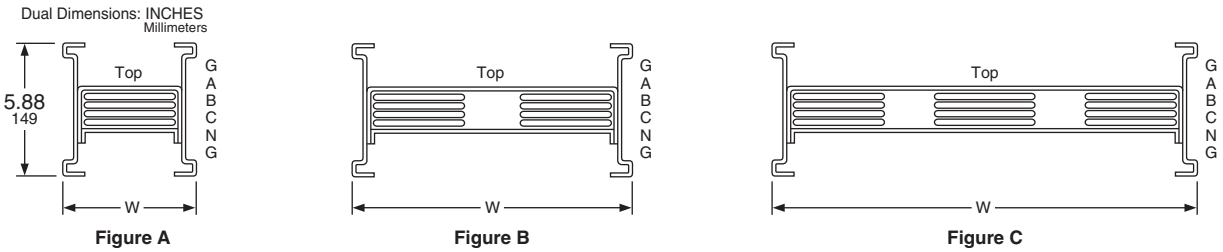

Figure 61: Cross Sections—Plug-In and Indoor Feeder Lengths Dimensions

Cross Sections—Fittings and All Outdoor Feeder

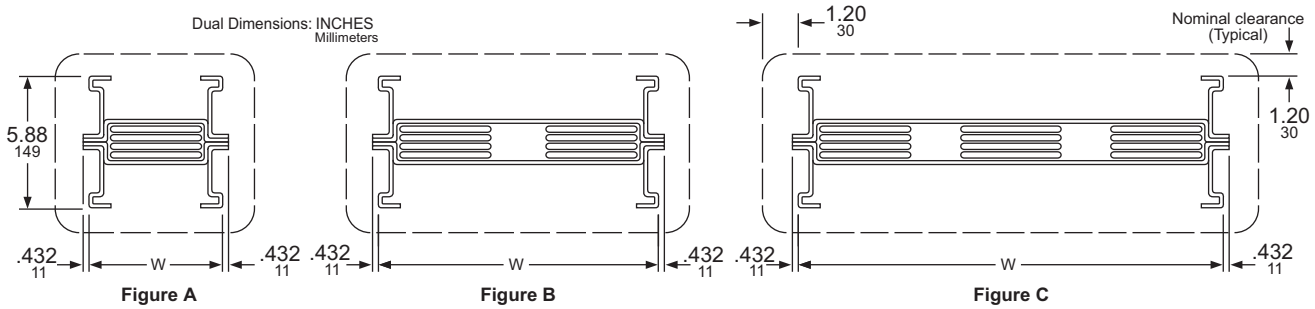

Figure 62: Cross Sections—Fittings and All Outdoor Feeder Dimensions

NOTE: Dotted line indicates the profile of the joint covers for Outdoor Feeder busway. The profile for indoor fittings is the same as the busway itself.

Table 27: Cross-Sections–Aluminum Content and Weight

Ampere Rating	W		Fig.	Bus Bars Per Phase		Approximate Weights – Plug-In			
						3-Pole		4-Pole	
	IN	mm		IN	mm	Lb/Ft	Kg/M	Lb/Ft	Kg/M
800	4.34	110	A	One: 0.25 x 3	One: 6 x 76	11	17	12	18
1000	5.34	136	A	One: 0.25 x 4	One: 6 x 102	12	18	13	20
1200	6.34	161	A	One: 0.25 x 5	One: 6 x 127	13	20	15	22
1350	7.34	186	A	One: 0.25 x 6	One: 6 x 152	14	21	16	24
1600	8.84	225	A	One: 0.25 x 6.5	One: 6 x 165	16	24	18	27
2000	12.72	323	B	Two: 0.25 x 4	Two: 6 x 102	21	32	25	37
2500	16.22	412	B	Two: 0.25 x 5	Two: 6 x 127	25	37	30	44
3000	18.72	475	B	Two: 0.25 x 6.5	Two: 6 x 165	28	42	34	50
4000	25.60	650	C	Three: 0.25 x 6	Three: 6 x 152	38	57	45	67

© 1986–2017 Schneider Electric
All Rights Reserved

Table 28: Cross-Sections–Copper Content and Weight

Amp. Rating	W		Fig.	Bus Bars Per Phase		Approximate Weights—Plug-In			
						3-Pole		4-Pole	
	IN	mm		IN	mm	Lb/Ft	Kg/M	Lb/Ft	Kg/M
800	3.84	98	A	One: 0.25 x 2.5	One: 6 x 64	14	21	17	25
1000	4.34	110	A	One: 0.25 x 2.5	One: 6 x 64	16	24	19	28
1200	5.34	136	A	One: 0.25 x 3	One: 6 x 76	19	28	23	34
1350	5.84	148	A	One: 0.25 x 4	One: 6 x 102	21	31	25	37
1600	6.74	171	A	One: 0.25 x 4.5	One: 6 x 114	23	35	30	44
2000	7.84	199	A	One: 0.25 x 6	One: 6 x 152	27	39	33	49
2500	12.72	323	B	Two: 0.25 x 4	Two: 6 x 102	38	57	46	69
3000	15.22	387	B	Two: 0.25 x 4.5	Two: 6 x 114	42	63	50	75
3200	16.22	412	B	Two: 0.25 x 5	Two: 6 x 127	49	73	55	82
4000	23.60	599	C	Three: 0.25 x 4	Three: 6 x 102	63	94	77	114
5000	25.10	638	C	Three: 0.25 x 5.4	Three: 6 x 137	77	114	95	141

NOTES:

1. For required wall and floor openings, refer to page 97.
2. Values are for thermal-rated busway. Contact Schneider Electric for other options such as low current density rated, harmonic rated, and IP54 rated.

Straight Lengths—Feeder

NOTE: All straight lengths and fittings of feeder busway are fully compatible, rating for rating, with straight lengths of plug-in busway. Available in 1-in. (25 mm) increments from 16–120 in. (406–3048 mm).

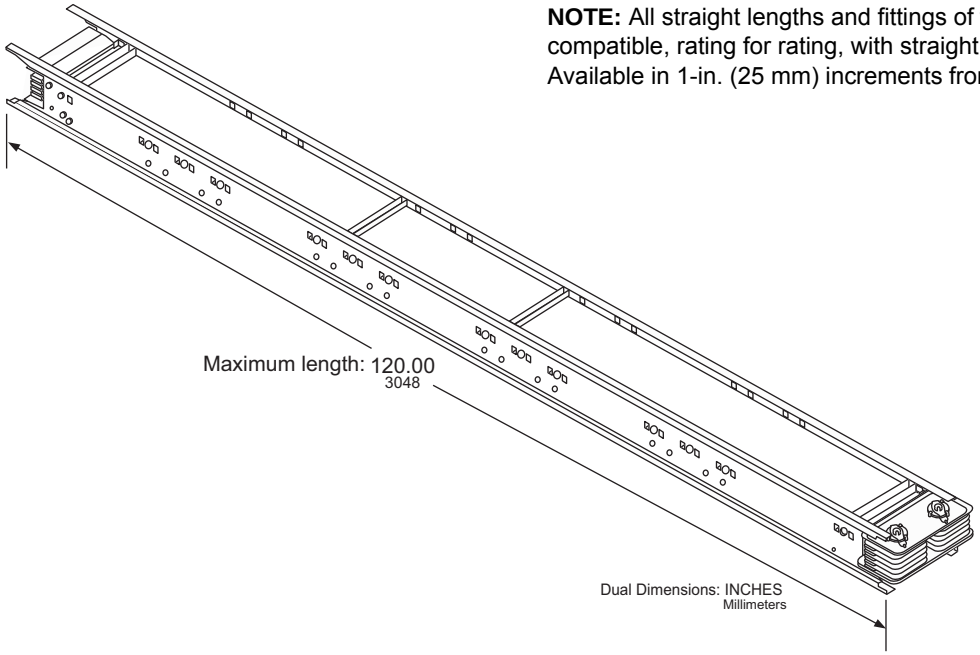

Figure 63: Straight Lengths—Feeder Dimensions

© 1986–2017 Schneider Electric
All Rights Reserved

Straight Lengths—Plug-In (Indoor Only)

NOTE: All straight lengths of plug-in busway are fully compatible, rating for rating, with straight lengths and fittings of feeder busway.

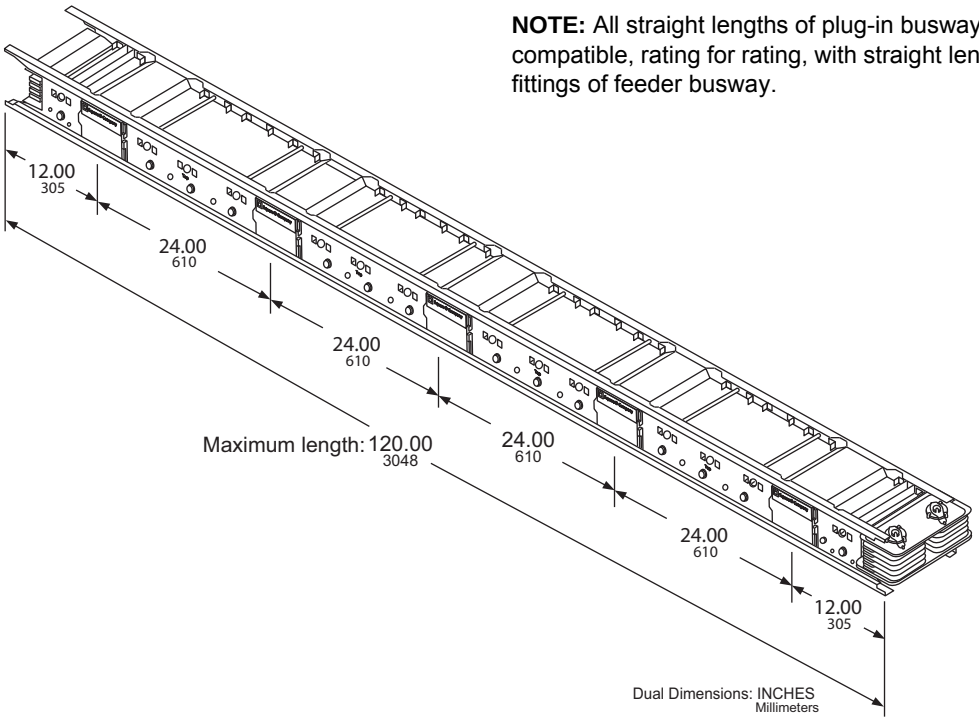

Figure 64: Straight Lengths—Plug-In (Indoor Only) Dimensions

Table 29: Straight Lengths—Catalog No. Suffix

Catalog Number Suffix	-10ST	-8ST	-6ST	-4ST
Standard Lengths–Feet	10 ft	8 ft	6 ft	4 ft
Standard Lengths–Meters	3.05 m	2.44 m	1.83 m	1.219 m
Number of Plug-In Openings	10	8	6	4

© 1986–2017 Schneider Electric
All Rights Reserved

Flanges

Qwik flange is typically used only on Schneider Electric indoor equipment top exit/entry. Flanged end is typically used on all other Schneider Electric indoor/outdoor equipment, including third party equipment.

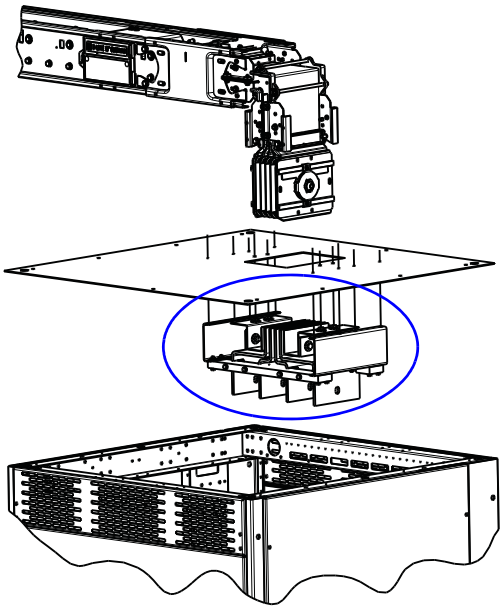

Figure 65: Qwik Flange

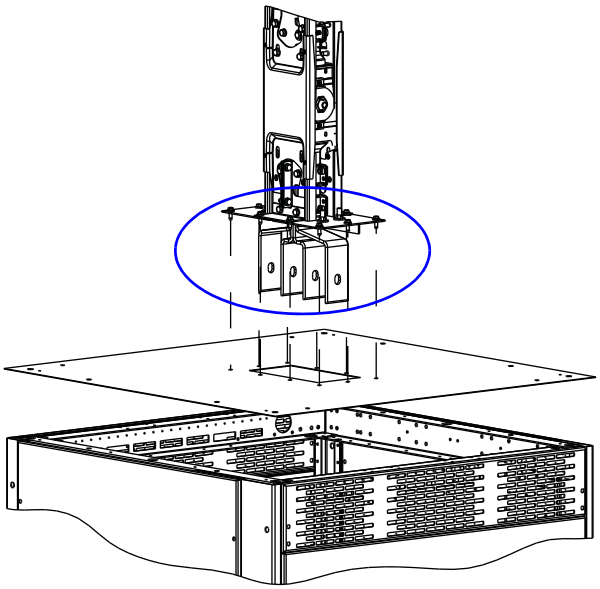

Figure 66: Flanged End

© 1986–2017 Schneider Electric
All Rights Reserved

Legacy Qwik Flange (Indoor Only)

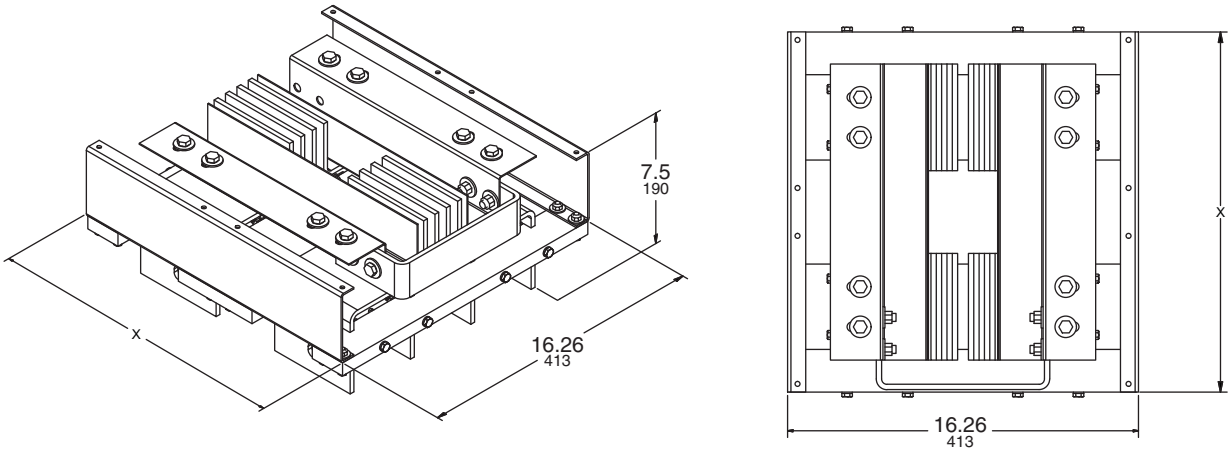

Figure 67: Legacy Qwik Flange (Indoor Only) Dimensions

Table 30: Legacy Qwik Flange–Catalog Number Suffix -QF

Amperage Rating		X	
Aluminum	**Copper**	**IN**	**mm**
—	800	10.52	267
800	1000	10.52	267
1000	1200	10.52	267
—	1350	10.52	267
1200	—	10.52	267
—	1600	10.52	267
1350	—	10.52	267
—	2000	10.52	267
1600	—	10.52	267
2000	2500	14.34	364
2500	—	17.84	453
—	3000	16.84	428
—	3200	17.84	453
3000	—	20.34	517
—	4000	25.22	641
4000	—	27.22	691
—	5000	26.72	679

© 1986–2017 Schneider Electric
All Rights Reserved

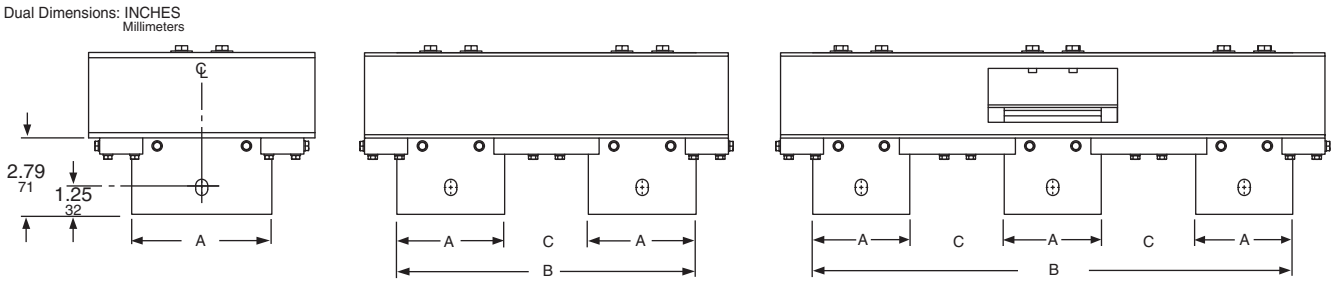

Figure 1 Figure 2 Figure 3

Figure 68: Legacy Aluminum and Copper Qwik Flange Dimensions

Table 31: Legacy Aluminum Qwik Flange–Application Data

Aluminum Ampere Rating	Fig.	A		B		C	
		IN	mm	IN	mm	IN	mm
800	1	3.00	76	—	—	—	—
1000	1	4.00	102	—	—	—	—
1200	1	5.00	127	—	—	—	—
1350	1	6.00	152	—	—	—	—
1600	1	7.50	191	—	—	—	—
2000	2	4.50	114	11.38	289	2.38	60
2500	2	6.00	152	14.88	378	2.88	73
3000	2	7.50	191	17.38	441	2.38	60
4000	3	6.50	165	24.26	616	2.38	60

Table 32: Legacy Copper Qwik Flange–Application Data

Copper Ampere Rating	Fig.	A		B		C	
		IN	mm	IN	mm	IN	mm
800	1	2.50	64	—	—	—	—
1000	1	3.00	76	—	—	—	—
1200	1	4.00	102	—	—	—	—
1350	1	4.50	114	—	—	—	—
1600	1	5.40	137	—	—	—	—
2000	1	6.50	165	—	—	—	—
2500	2	4.50	114	11.38	289	2.38	60
3000	2	5.00	127	13.88	353	3.88	86
3200	2	6.00	152	14.88	378	2.88	73
4000	3	4.50	114	22.26	565	4.38	111
5000	3	6.00	152	23.76	604	2.88	73

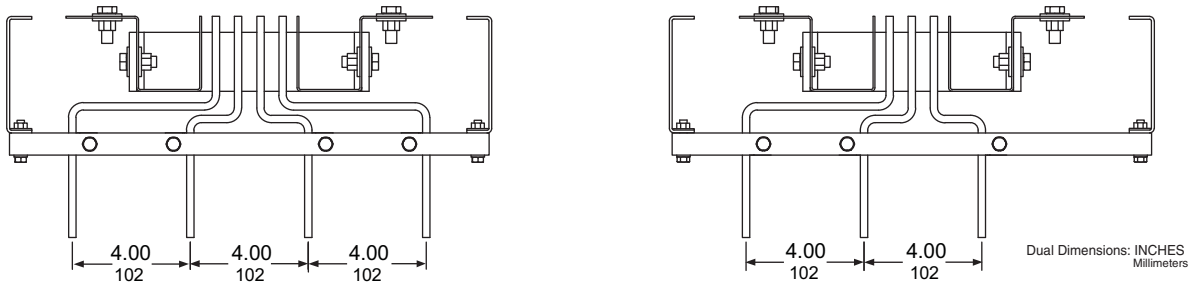

Figure 69: Legacy Qwik Flange Dimensions

Qwik Flanges and closing plates are typically shipped with the switchboard/switchgear. The Qwik Flange closing plate closes the gap between the busway and the top of the gear. If a separate Qwik Flange or closing plate kit is needed, the catalog numbers can be created by adding the suffix "QF" or "CP" respectively to the prefix of the busway being installed. For example: AF2530G**QF** or CF2312G**CP**.

NOTE: Refer to “Detail of Phase Bussing Connections in a Switchboard” on page 76.

© 1986–2017 Schneider Electric
All Rights Reserved

New Qwik Flange (Indoor Only)

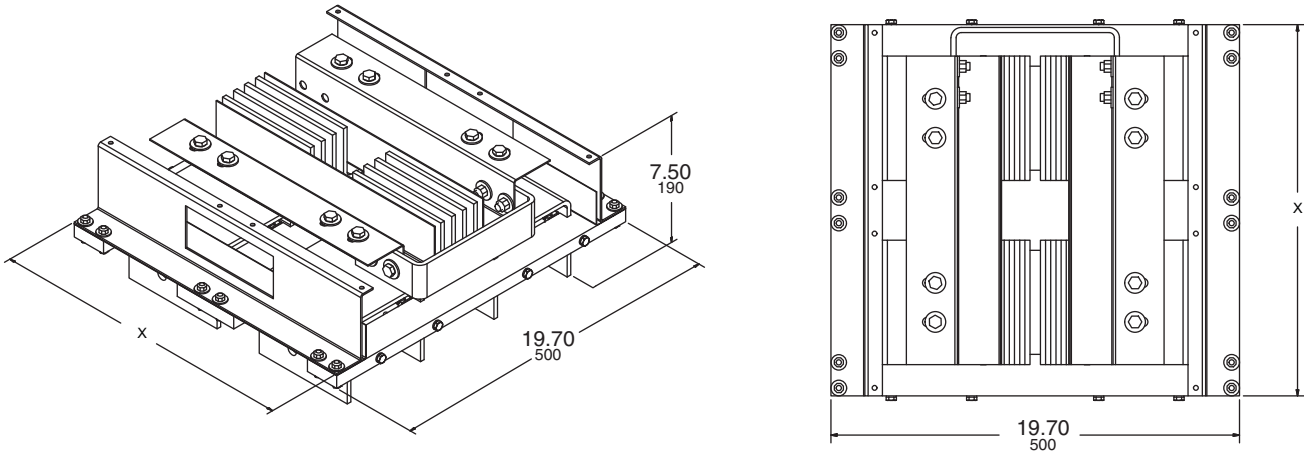

Figure 70: New Qwik Flange (Indoor Only) Dimensions

Table 33: New Qwik Flange–Catalog Number Suffix -NQF

Amperage Rating		X	
Aluminum	**Copper**	**IN**	**mm**
—	800	10.52	267
800	1000	10.52	267
1000	1200	10.52	267
—	1350	10.52	267
1200	—	10.52	267
—	1600	10.52	267
1350	—	10.52	267
—	2000	10.52	267
1600	—	10.52	267
2000	2500	14.40	366
2500	—	17.90	455
—	3000	16.90	430
—	3200	17.90	455
3000	—	20.40	519
—	4000	25.28	643
4000	—	27.28	693
—	5000	26.78	680

© 1986–2017 Schneider Electric
All Rights Reserved

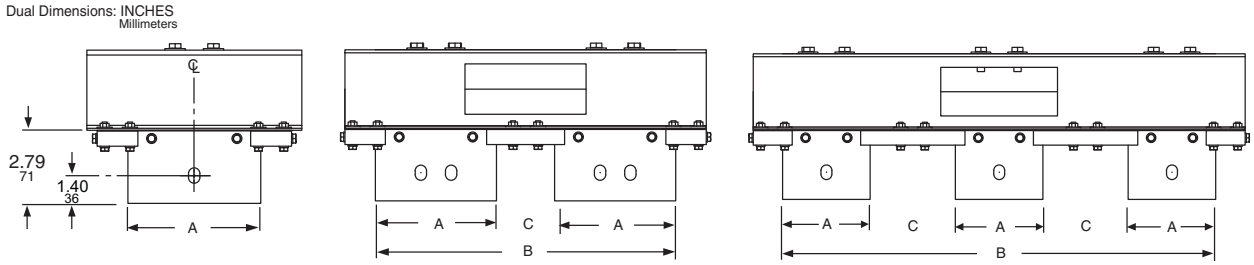

Figure 1 Figure 2 Figure 3

Figure 71: New Aluminum and Copper Qwik Flange (Indoor Only) Dimensions

Table 34: Aluminum New Qwik Flange–Application Data

Aluminum Ampere Rating	Fig.	A		B		C	
		IN	mm	IN	mm	IN	mm
800	1	3.00	76	—	—	—	—
1000	1	4.00	102	—	—	—	—
1200	1	5.00	127	—	—	—	—
1350	1	6.00	152	—	—	—	—
1600	1	7.50	191	—	—	—	—
2000	2	4.50	114	11.38	289	2.38	60
2500	2	6.00	152	14.88	378	2.88	73
3000	2	7.50	191	17.38	441	2.38	60
4000	3	6.50	165	24.26	616	2.38	60

Table 35: Copper New Qwik Flange–Application Data

Copper Ampere Rating	Fig.	A		B		C	
		IN	mm	IN	mm	IN	mm
800	1	2.50	64	—	—	—	—
1000	1	3.00	76	—	—	—	—
1200	1	4.00	102	—	—	—	—
1350	1	4.50	114	—	—	—	—
1600	1	5.40	137	—	—	—	—
2000	1	6.50	165	—	—	—	—
2500	2	4.50	114	11.38	289	2.38	60
3000	2	5.00	127	13.88	353	3.88	86
3200	2	6.00	152	14.88	378	2.88	73
4000	3	4.50	114	22.26	565	4.38	111
5000	3	6.00	152	23.76	604	2.88	73

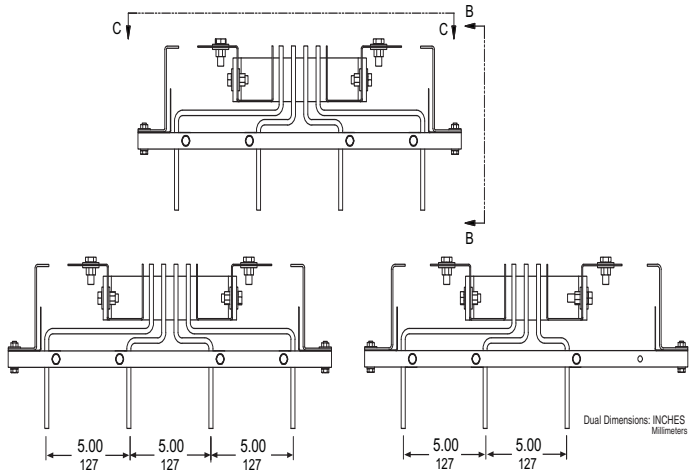

Figure 72: New Qwik Flange Dimensions

New Qwik Flanges and closing plates are typically shipped with the switchboard/switchgear. The new Qwik Flange closing plate closes the gap between the busway and the top of the gear. If a separate new Qwik Flange or closing plate kit is needed, the catalog numbers can be created by adding the suffix "NQF" or "CP" respectively to the prefix of the busway being installed. For example: AF2530GNQF or AF2530GCP.

NOTE: Refer to “Detail of Phase Bussing Connections in a Switchboard” on page 76.

© 1986–2017 Schneider Electric
All Rights Reserved

Flanged End

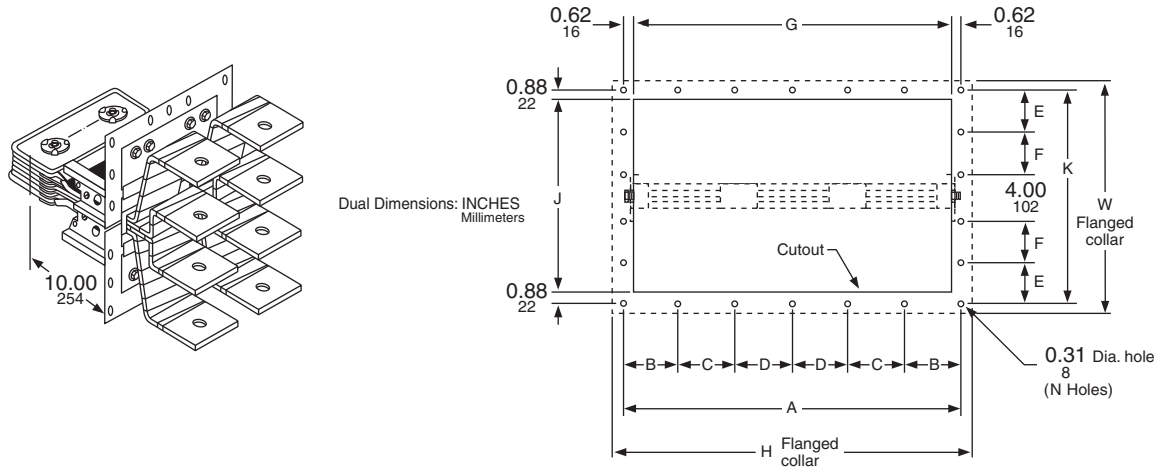

Figure 73: Flanged End: Catalog Number Suffix–10FEB Dimensions

Table 36: Flanged Collar Hole Location and Spacing

Ampere Rating		N Holes	Hole Location and Spacing													
			A		B		C		D		K		E		F	
Aluminum	Copper		IN	mm	IN	mm	IN	mm	IN	mm	IN	mm	IN	mm	IN	mm
—	800	10	6.38	162	3.19	81	—	—	—	—	11.75	296	3.88	98	—	—
800	1000	10	6.38	162	3.19	81	—	—	—	—	11.75	296	3.88	98	—	—
—	1200	10	7.00	178	3.50	89	—	—	—	—	11.75	296	3.88	98	—	—
1000	1350	10	8.00	203	4.00	102	—	—	—	—	11.75	296	3.88	98	—	—
1200	—	10	9.00	229	4.50	114	—	—	—	—	11.75	296	3.88	98	—	—
1350	1600	10	10.00	254	5.00	127	—	—	—	—	11.75	296	3.88	98	—	—
1600	2000	16	12.88	327	4.25	108	—	—	—	—	17.75	451	3.46	88	3.42	87
2000	2500	16	14.88	378	5.00	127	—	—	—	—	17.75	451	3.46	88	3.42	87
2500	3000	18	18.88	480	4.75	121	4.69	119	—	—	17.75	451	3.46	88	3.42	87
—	3200	18	18.88	480	4.75	121	4.69	119	—	—	17.75	451	3.46	88	3.42	87
3000	—	20	21.75	552	4.38	111	4.37	111	—	—	17.75	451	3.46	88	3.42	87
4000	4000	22	27.75	705	4.62	117	4.63	118	4.63	118	17.75	451	3.46	88	3.42	87
—	5000	22	27.75	705	4.62	117	4.63	118	4.63	118	17.75	451	3.46	88	3.42	87

© 1986–2017 Schneider Electric
All Rights Reserved

Table 37: Flanged Collar and Cutout Dimensions

Ampere Rating		L		H		W				G		J	
						3-Pole		4-Pole					
Aluminum	Copper	IN	mm	IN	mm	IN	mm	IN	mm	IN	mm	IN	mm
—	800	10.00	254	7.38	187	12.82	326	13.18	335	5.12	130	10.00	254
800	1000	10.00	254	7.38	187	12.82	326	13.18	335	5.12	130	10.00	254
—	1200	10.00	254	8.00	203	12.82	326	13.18	335	5.76	145	10.00	254
1000	1350	10.00	254	9.00	229	12.82	326	13.18	335	6.75	171	10.00	254
1200	—	10.00	254	10.00	254	12.82	326	13.18	335	7.76	196	10.00	254
1350	1600	10.00	254	11.00	279	12.82	326	13.18	335	8.75	222	10.00	254
1600	2000	10.00	254	13.88	352	18.82	478	19.18	487	11.63	295	16.00	406
2000	2500	10.00	254	15.88	403	18.82	478	19.18	487	13.63	346	16.00	406
2500	3000	10.00	254	19.88	505	18.82	478	19.18	487	17.63	448	16.00	406
—	3200	10.00	254	19.88	505	18.82	478	19.18	487	17.63	448	16.00	406
3000	—	10.00	254	22.75	578	18.82	478	19.18	487	20.50	521	16.00	406
4000	4000	10.00	254	28.75	730	18.82	478	19.18	487	26.50	673	16.00	406
—	5000	10.00	254	28.75	730	18.82	478	19.18	487	26.50	673	16.00	406

© 1986–2017 Schneider Electric
All Rights Reserved

Flanged End Application Data

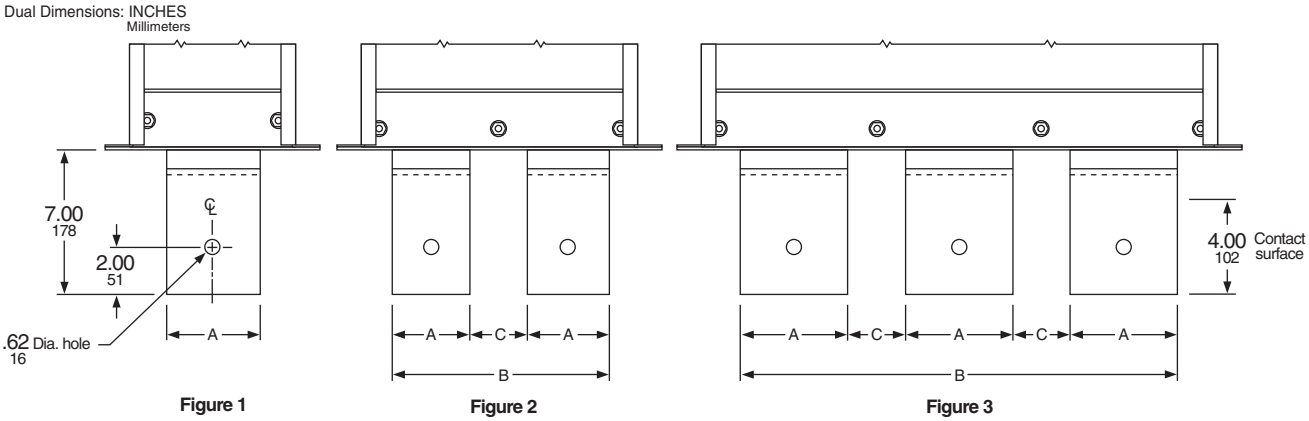

Figure 74: Flanged Collar and Cutout Dimensions

Table 38: Aluminum Flanged End–Application Data

Aluminum Ampere Rating	Fig.	A		B		C	
		IN	mm	IN	mm	IN	mm
800	1	3.00	76	—	—	—	—
1000	1	4.00	102	—	—	—	—
1200	1	5.00	127	—	—	—	—
1350	1	6.00	152	—	—	—	—
1600	1	7.50	191	—	—	—	—
2000	2	4.50	114	11.38	289	2.38	60
2500	2	6.00	152	14.88	378	2.88	73
3000	2	7.50	191	17.38	441	2.38	60
4000	3	6.50	165	24.26	616	2.38	60

Table 39: Copper Flanged End–Application Data

Copper Ampere Rating	Fig.	A		B		C	
		IN	mm	IN	mm	IN	mm
800	1	2.50	64	—	—	—	—
1000	1	3.00	76	—	—	—	—
1200	1	4.00	102	—	—	—	—
1350	1	4.50	114	—	—	—	—
1600	1	5.40	137	—	—	—	—
2000	1	6.50	165	—	—	—	—
2500	2	4.50	114	11.38	289	2.38	60
3000	2	5.00	127	13.88	353	3.88	99
3200	2	6.00	152	14.88	378	2.88	73
4000	3	4.50	114	22.26	565	4.38	111
5000	3	6.00	152	23.76	604	2.88	73

© 1986–2017 Schneider Electric
All Rights Reserved

Table 40: Flanged End-Flanged Collar Hole Location and Spacing

Ampere Rating		S		T		U	
Aluminum	Copper	IN	mm	IN	mm	IN	mm
—	800	3.00	76	3.62	92	3.81	97
800	1000	3.00	76	3.62	92	3.81	97
—	1200	3.00	76	3.62	92	3.81	97
1000	1350	3.00	76	3.62	92	3.81	97
1200	—	3.00	76	3.62	92	3.81	97
1350	1600	3.00	76	3.62	92	3.81	97
1600	2000	3.00	76	6.62	169	6.81	173
2000	2500	5.00	127	6.62	169	6.81	173
2500	3000	5.00	127	6.62	169	6.81	173
3000	—	5.00	127	6.62	169	6.81	173
—	3200	5.00	127	6.62	169	6.81	173
4000	4000	5.00	127	6.62	169	6.81	173
—	5000	5.00	127	6.62	169	6.81	173

NOTE: Refer to “Detail of Phase Bussing Connections in a Switchboard” on page 76.

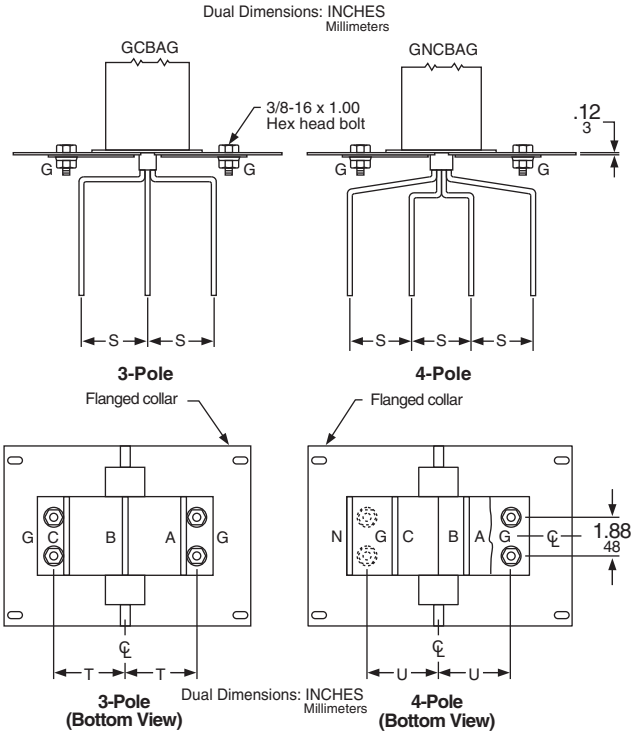

Figure 75: Flanged End-Flanged Collar Hole Location and Spacing

© 1986–2017 Schneider Electric
All Rights Reserved

NOTICE

HAZARD OF EQUIPMENT DAMAGE

Improper contact pressure can cause overheating and equipment failure. Use 3-inch (76 mm) conical washers and Grade 5 hardware to ensure proper contact pressure.

Failure to follow this instruction can result in equipment damage.

Detail of Phase Bussing Connections in a Switchboard

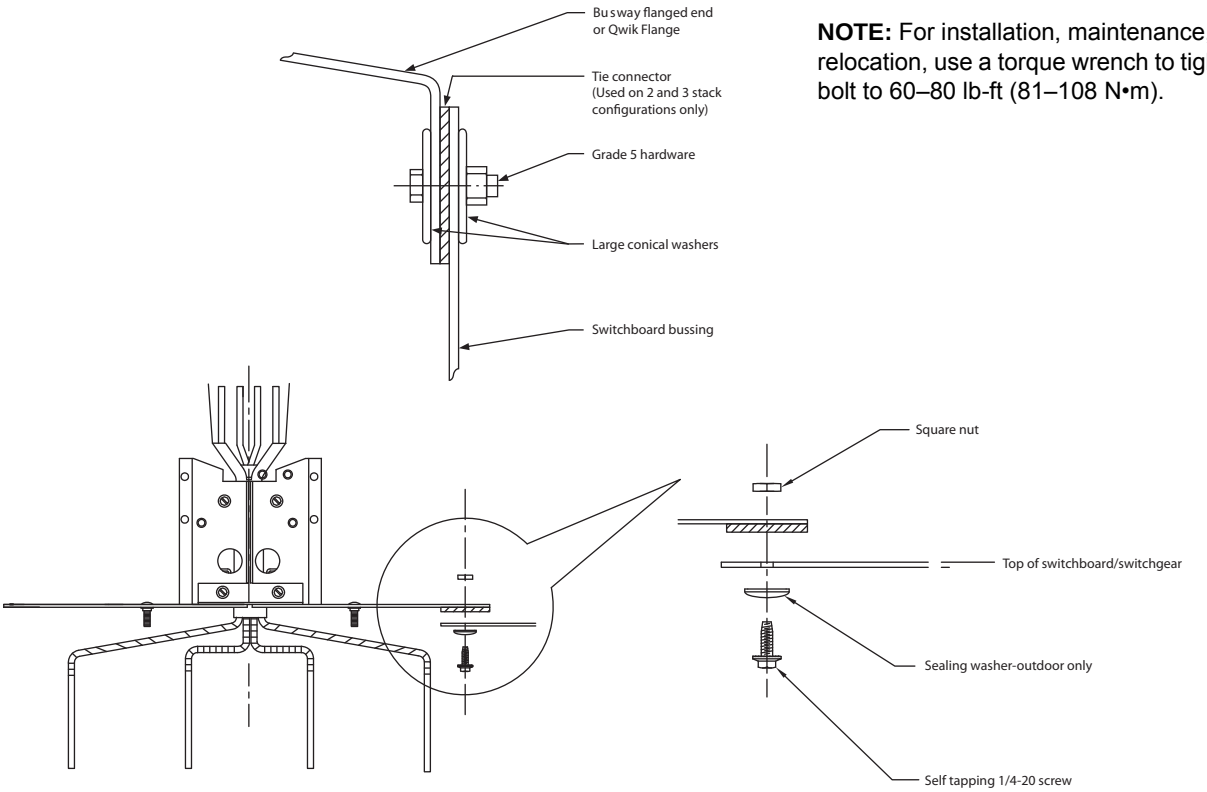

NOTE: For installation, maintenance, or relocation, use a torque wrench to tighten the bolt to 60–80 lb-ft (81–108 N•m).

Figure 76: Switchboard Phase Bussing Connections

NOTE: Schneider Electric switchgear and switchboards use a unique flange end. For details, contact your local Schneider Electric representative.

© 1986–2017 Schneider Electric
All Rights Reserved

Elbows

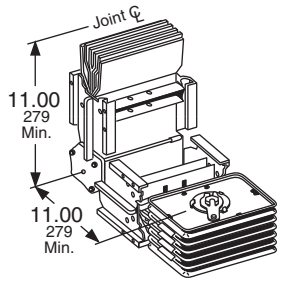

Edgewise: Catalog Number Suffix–LEM11

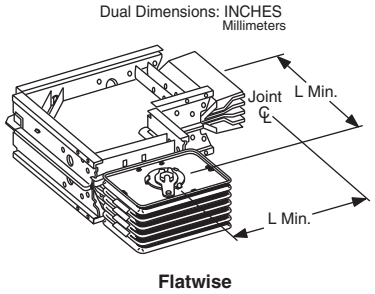

Flatwise: Catalog Number Suffix–LFM

Figure 77: Elbows

Table 41: Flatwise Elbows–Application Data

Ampere Rating		L		Catalog Number Suffix
Aluminum	Copper	IN	mm	
—	800	11.00	279	-LFM11
800	1000	11.00	279	-LFM11
1000	1200	12.00	305	-LFM12
1200	1350	12.00	305	-LFM12
—	1600	12.00	305	-LFM12
1350	2000	13.00	330	-LFM13
1600	—	13.00	330	-LFM13
2000	2500	15.00	381	-LFM15
—	3000	16.00	406	-LFM16
2500	—	17.00	432	-LFM17
—	3200	17.00	432	-LFM17
3000	—	18.00	457	-LFM18
—	4000	21.00	533	-LFM21
—	5000	21.00	533	-LFM21
4000	—	22.00	559	-LFM22

NOTE: Values are for thermal-rated busway. Contact Schneider Electric for other options such as low current density rated, harmonic rated, and IP54 rated.

© 1986–2017 Schneider Electric
All Rights Reserved

Offset Elbows

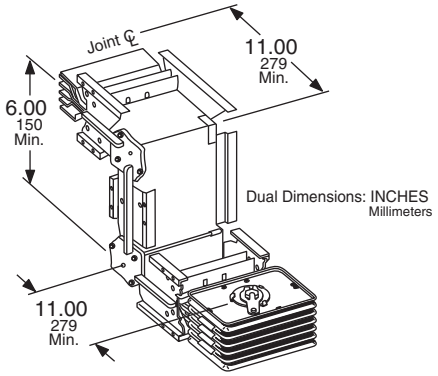

Edgewise: Catalog Number Suffix–OE

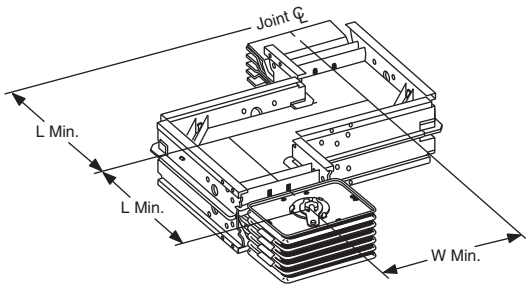

Flatwise: Catalog Number Suffix–OF

Figure 78: Offset Elbows

Table 42: Flatwise Offset–Application Data

Ampere Rating		L		W	
Aluminum	**Copper**	**IN**	**mm**	**IN**	**mm**
800	800/1000	11.00	279	4.00	100
1000	1200	12.00	305	4.00	100
—	1350	12.00	305	4.00	100
1200	1600	12.00	305	6.00	150
1350	—	13.00	330	9.00	229
—	2000	13.00	330	9.00	229
1600	—	13.00	330	10.00	254
2000	2500	15.00	381	14.00	356
2500	—	17.00	432	16.00	406
—	3000	16.00	406	16.00	406
—	3200	17.00	432	16.00	406
3000	—	18.00	457	18.00	457
4000	—	22.00	559	25.00	635
—	4000	21.00	533	23.00	584
—	5000	21.00	533	25.00	635

NOTE: Values are for thermal-rated busway. Contact Schneider Electric for other options such as low current density rated, harmonic rated, and IP54 rated.

© 1986–2017 Schneider Electric
All Rights Reserved

Double Elbows

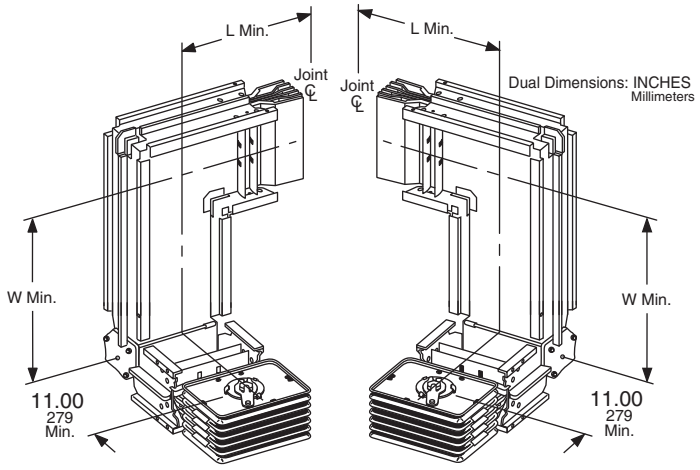

Catalog Number Suffix–DL **Catalog Number Suffix–DR**

Figure 79: Double Elbows

Table 43: Double Elbows–Application Data

Ampere Rating		L		W	
Aluminum	Copper	IN	mm	IN	mm
800	800/1000	11.00	279	7.00	178
1000	1200	12.00	305	8.00	203
—	1350	12.00	305	8.00	203
1200	1600	12.00	305	8.00	203
1350	—	13.00	330	9.00	229
—	2000	13.00	330	9.00	229
1600	—	13.00	330	9.00	229
2000	2500	15.00	381	12.00	305
2500	—	17.00	432	14.00	356
—	3000	16.00	406	13.00	330
—	3200	17.00	432	14.00	356
3000	—	18.00	457	15.00	381
4000	—	22.00	559	18.00	457
—	4000	21.00	533	17.00	432
—	5000	21.00	533	18.00	457

NOTE: Values are for thermal-rated busway. Contact Schneider Electric for other options such as low current density rated, harmonic rated, and IP54 rated.

© 1986–2017 Schneider Electric
All Rights Reserved

Cable Tap Box (End)

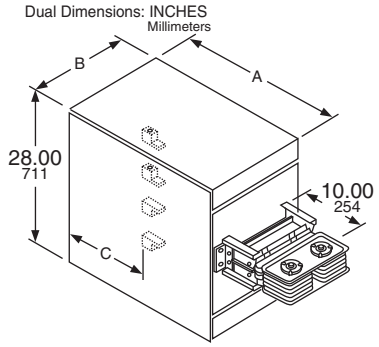

Figure 80: Indoor Catalog Number Suffix–ETBMB

Table 44: Indoor Cable Tap Box (End)–Application Data

Ampere Rating		Indoor						Lugs Per Phase and Neutral 1/0-600 kcmil	Ground Lugs	
		A		B		C				
Aluminum	Copper	IN	mm	IN	mm	IN	mm		#6-300 kcmil	1/0-600 kcmil
800	800	29.14	740	11.00	279	16.00	406	3	3	—
1000	1000	29.14	740	11.00	279	16.00	406	4	4	—
1200	1200	29.14	740	11.00	279	16.00	406	4	4	—
1350	1350	29.14	740	14.88	378	16.00	406	5	5	—
1600	1600	29.14	740	14.88	378	16.00	406	6	6	—
—	2000	29.14	740	14.88	378	16.00	406	7	7	—
2000	—	29.14	740	16.88	429	16.00	406	7	7	—
2500	2500	39.38	1000	20.88	530	26.00	660	9	—	9
—	3000	39.38	1000	20.88	530	26.00	660	10	—	10
—	3200	39.38	1000	20.88	530	26.00	660	11	—	11
3000	—	39.38	1000	23.76	604	26.00	660	10	—	10
4000	4000	39.38	1000	29.76	756	26.00	660	14	—	14
—	5000	39.38	1000	29.76	756	26.00	660	17	—	17

NOTES:

1. Values are for thermal-rated busway. Contact Schneider Electric for other options such as low current density rated, harmonic rated, and IP54 rated.
2. All sides are removable for access.

© 1986–2017 Schneider Electric
All Rights Reserved

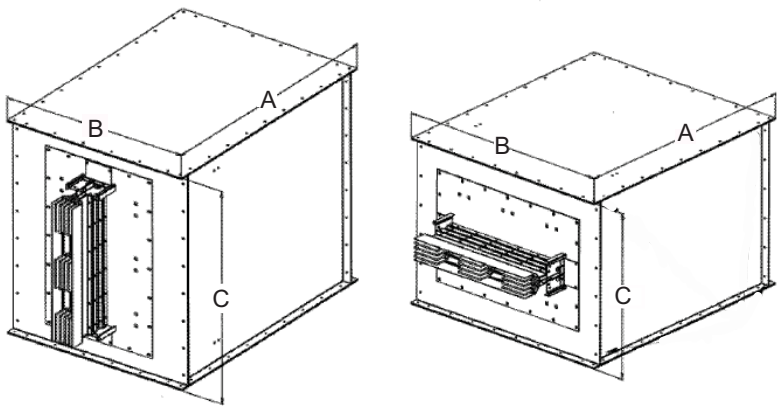

Edgewise **Flatwise**

Figure 81: Outdoor Catalog Number Suffix–ETBSEW (Edgewise) or ETBS (Flatwise)

NOTE: There is a 1.5 in. (38 mm) lip around the perimeter of the top and bottom cover and the two sidewalls.

Table 45: Outdoor Cable Tap Box (End)–Application Data

Ampere Rating		Outdoor–Edgewise						Outdoor–Flatwise					
		A		B		C		A		B		C	
Aluminum	Copper	IN	mm	IN	mm	IN	mm	IN	mm	IN	mm	IN	mm
800	800	32.14	816	30.78	782	15.22	387	32.14	816	18.00	457	28.00	711
1000	1000	32.14	816	30.78	782	15.22	387	32.14	816	18.00	457	28.00	711
1200	1200	32.14	816	30.78	782	15.22	387	32.14	816	18.00	457	28.00	711
1350	1350	32.14	816	30.78	782	19.10	485	32.14	816	21.88	556	28.00	711
1600	1600	32.14	816	30.78	782	19.10	485	32.14	816	21.88	556	28.00	711
—	2000	32.14	816	30.78	782	19.10	485	32.14	816	21.88	556	28.00	711
2000	—	32.14	816	30.78	782	21.10	536	32.14	816	23.88	607	28.00	711
2500	2500	42.38	1076	30.78	782	25.10	638	42.38	1076	27.88	708	28.00	711
—	3000	42.38	1076	30.78	782	25.10	638	42.38	1076	27.88	708	28.00	711
3000	—	42.38	1076	30.78	782	27.98	711	42.38	1076	30.76	781	28.00	711
4000	4000	42.38	1076	30.78	782	34.32	872	42.38	1076	37.10	942	28.00	711
—	5000	42.38	1076	30.78	782	34.32	872	42.38	1076	37.10	942	28.00	711

NOTES:

1. Values are for thermal-rated busway. Contact Schneider Electric for other options such as low current density rated, harmonic rated, and IP54 rated.
2. Edgewise or flatwise cable tap box (end) are applicable on vertical applications.
3. Due to the construction design, the edgewise and flatwise outdoor cable tap boxes are not interchangeable in the field.

© 1986–2017 Schneider Electric
All Rights Reserved

Cable Tap Box (Center)

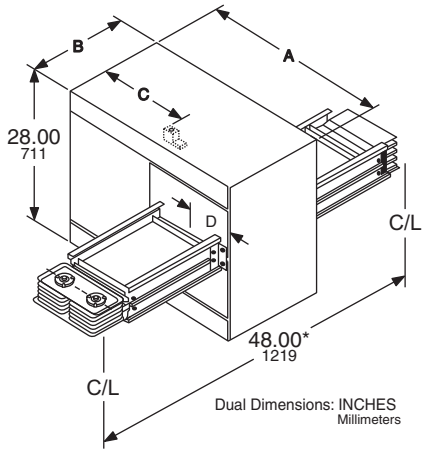

* 3000 A / 3200 A / 4000 A / 5000 A Center Tap Box Length—60 in. (1524 mm)

Figure 82: Catalog Number Suffix–CTB

Table 46: Cable Tap Box (Center)–Dimensions and Lug Specifications

Ampere Rating		A		B		C		D		Lugs Per Phase and Neutral 1/0-600 kcmil	Ground Lugs	
Aluminum	Copper	IN	mm	IN	mm	IN	mm	IN	mm		#6 - 300 kcmil	1/0-600 kcmil
800	800	35	889	14	356	16	406	7.27	185	3	3	—
1000	1000	35	889	14	356	16	406	7.27	185	4	4	—
1200	1200	35	889	14	356	16	406	7.27	185	4	4	—
1350	1350	35	889	14	356	16	406	7.27	185	5	5	—
1600	1600	35	889	14	356	16	406	7.27	185	6	6	—
—	2000	35	889	14	356	16	406	7.27	185	7	7	—
2000	—	41.70	1059	20	508	17.60	447	10.28	261	7	7	—
—	2500	41.70	1059	20	508	17.60	447	10.28	261	9	—	9
2500	—	41.70	1059	20	508	17.60	447	10.28	261	9	—	9
3000	3000	60.00	1524	22	559	29	737	16	406	10	—	10
—	3200	41.70	1059	20	508	17.60	447	10.28	261	11	—	11
4000	4000	63.00	1600	32	813	26	660	19.00	483	14	—	14
—	5000	63.00	1600	32	813	26	660	19.00	483	17	—	17

NOTE: Values are for thermal-rated busway. Contact Schneider Electric for other options such as low current density rated, harmonic rated, and IP54 rated.

© 1986–2017 Schneider Electric
All Rights Reserved

Cable Tap Box (Bolt On)

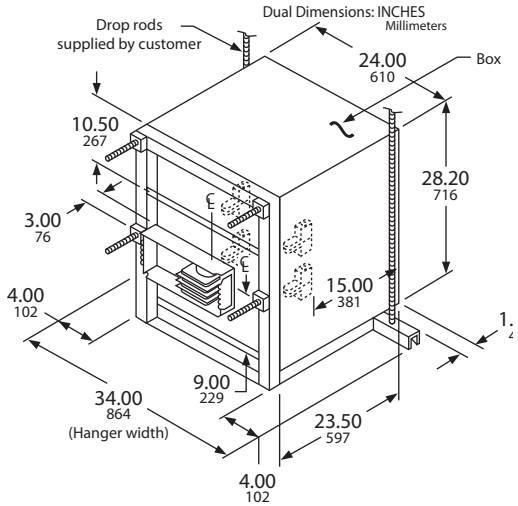

Figure 83: Cable Tap Box (Bolt On)

Table 47: Cable Tap Box (Bolt On)–Lug Specifications and Catalog Numbers

Ampere Rating	Lugs Per Phase and Neutral	Ground Lugs	Catalog Number	
			3Ø3W[1]	3Ø4W[1]
800	6 - 1/0-600	3 - 1/0-600	PTB316G__[2]	PTB516G__[2]
1000				
1200				
1350				
1600				

NOTES:

1. Box can be moved to opposite end in field (Vertical Only). 20.2-inch (513 mm) clearance required from ℄ of busway, for mounting bolt-on tap boxes when box is on top; and 10.0-inch (254 mm) required mounting clearance when box is on the bottom.
2. Cannot be used on 800 A Copper I-Line II busway.

[1] Can be used only on plug-in busway with the same number of poles (*e.g.*, do not use 3-pole units on 3Ø4W busway or 3Ø4W units on 3-pole busway). Cannot be mounted in the last opening on either side of a busway run.

[2] Add "H" on the end of the catalog number for units that will be **horizontally mounted busway** and "V" for units that will be **vertically mounted busway**. These mounting frames are NOT interchangeable.

Unfused Reducer (Indoor Only)

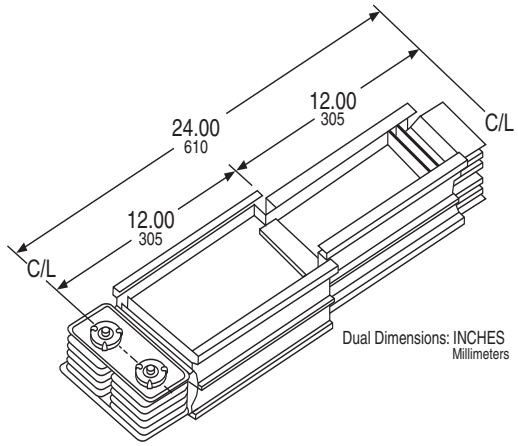

Figure 84: Unfused Reducer (Indoor Only)

Table 48: Unfused Reducer (Indoor)–Ampere Ratings and Catalog No. Suffix

Bolt End Ampere Rating	Catalog Number Suffix and Slot End Ampere Rating									
	400	600	800	1000	1200	1350	1600	2000	2500	3000
800	-R04	-R06	—	—	—	—	—	—	—	—
1000	-R04	-R06	-R08	—	—	—	—	—	—	—
1200	-R04	-R06	-R08	-R10	—	—	—	—	—	—
1350	—	-R06	-R08	-R10	-R12	—	—	—	—	—
1600	—	-R06	-R08	-R10	-R12	-R13	—	—	—	—
2000	—	—	-R08	-R10	-R12	-R13	-R16	—	—	—
2500	—	—	—	-R10	-R12	-R13	-R16	-R20	—	—
3000	—	—	—	-R10	-R12	-R13	-R16	-R20	-R25	—
3200	—	—	—	—	-R12	-R13	-R16	-R20	-R25	-R30
4000	—	—	—	—	—	—	-R16	-R20	-R25	-R30
5000	—	—	—	—	—	—	—	-R20	-R25	-R30

NOTE: The National Electrical Code states in Article 368-17(B) that overcurrent protection is required where busways are reduced in ampacity except for certain industrial applications.

© 1986–2017 Schneider Electric
All Rights Reserved

Expansion Fitting (Indoor Only)

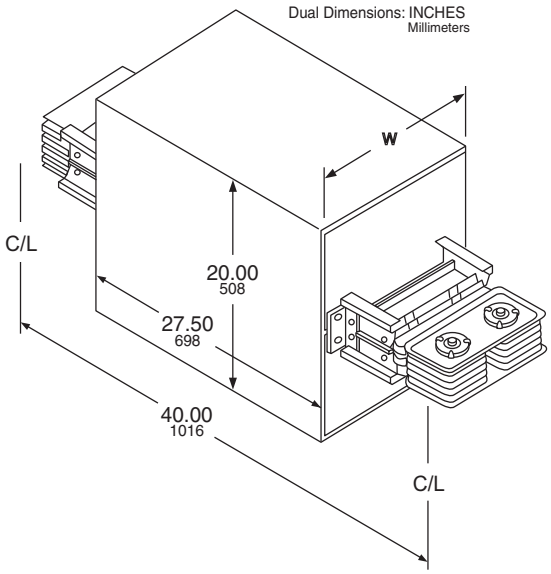

Figure 85: Catalog Number Suffix—EJ

Table 49: Expansion Fitting (Indoor)

Ampere Rating		W	
Aluminum	Copper	IN	mm
800	800	13.50	343
1000	1000	13.50	343
1200	1200	13.50	343
1350	1350	17.38	441
1600	1600	17.38	441
—	2000	17.38	441
2000	2500	19.38	492
2500	3000	23.38	594
3000	—	26.25	667
—	3200	23.38	594
4000	4000	32.25	819
—	5000	32.25	819

NOTES:

1. Expansion joint permits 1.50 inches (38 mm) of expansion or contraction.
2. An expansion fitting should be used under the following conditions: whenever a busway run crosses a building expansion, when a long straight run of busway does not contain any elbows, or both ends of the run are fixed.
3. Values are for thermal-rated busway. Contact Schneider Electric for other options such as low current density rated, harmonic rated, and IP54 rated.

Tees

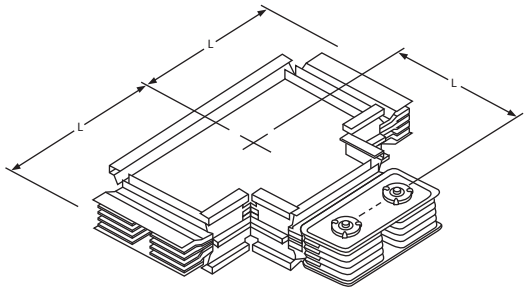

Figure 86: Tees

Table 50: Tees—Dimensions and Catalog No. Suffix

Ampere Rating		L		Catalog Number Suffix
Aluminum	Copper	IN	mm	
—	800	11.00	279	-33TFS11B11S11
800	1000	11.00	279	-33TFS11B11S11
1000	1200	12.00	305	-36TFS12B12S12
1200	1350	12.00	305	-36TFS12B12S12
—	1600	12.00	305	-36TFS12B12S12
1350	2000	13.00	330	-39TFS13B13S13
1600	—	13.00	330	-39TFS13B13S13
2000	2500	15.00[1]	381[1]	-45TFS15B15S15
—	3000	16.00[1]	406[1]	-48TFS16B16S16
2500	—	17.00[1]	432[1]	-51TFS17B17S17
3000	—	18.00[1]	457[1]	-54TFS18B18S18
—	3200	17.00	432	-51TFS17B17S17
—	4000	21.00[1]	533[1]	-63TFS21B21S21
—	5000	21.00[1]	533[1]	-63TFS21B21S21
4000	—	22.00[1]	559[1]	-66TFS22B22S22

NOTE: Values are for thermal-rated busway. Contact Schneider Electric for other options such as low current density rated, harmonic rated, and IP54 rated.

[1] Add 1 inch (25 mm) to L dimensions of outdoor tees.

© 1986–2017 Schneider Electric
All Rights Reserved

Service Head Flatwise

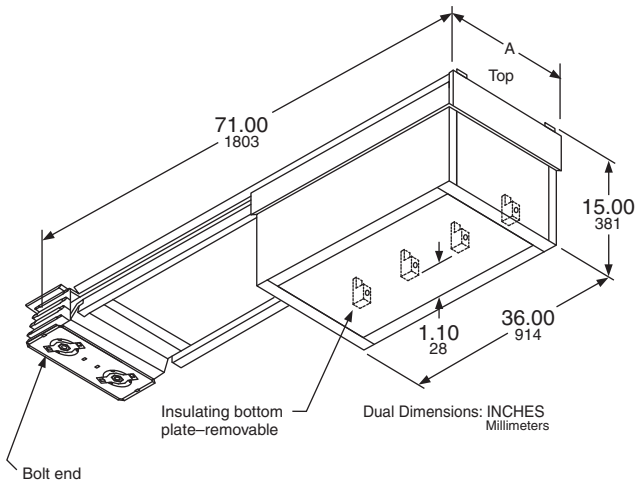

Catalog Number Suffix—71SB

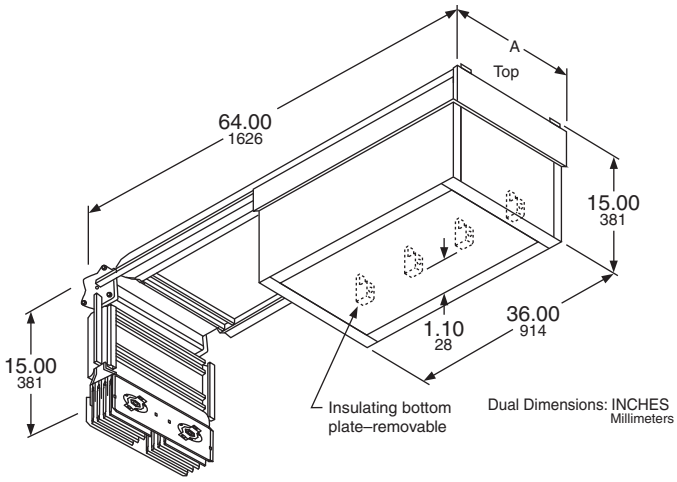

Catalog Number Suffix—79LESBS15T64

Figure 87: Service Head Flatwise

Transformer Tap (One 3Ø Transformer)

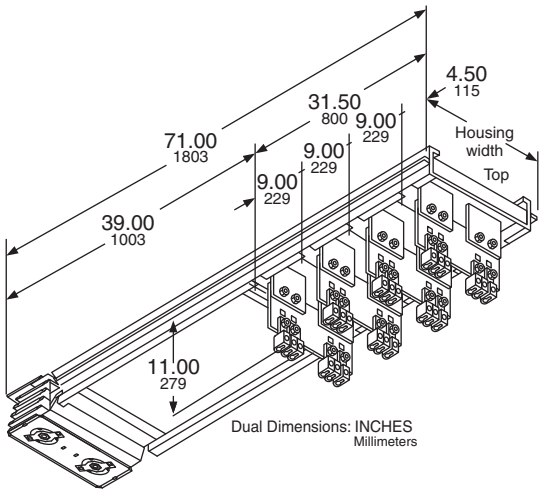

Catalog Number Suffix—71SF

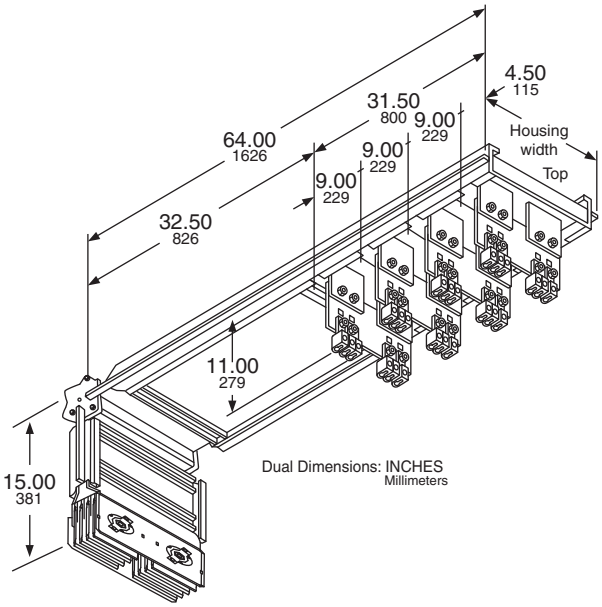

Catalog Number Suffix—79LESFS15T64

Figure 88: Transformer Tap (One 3Ø Transformer)

© 1986–2017 Schneider Electric
All Rights Reserved

Table 51: Service Head Flatwise and Transformer Tap (One 3Ø Transformer)–Lug Specifications

Ampere Rating	A	Lugs Per Phase and Neutral 1/0-600 kcmil	Ground Lugs #6-300 kcmil
800	Housing Width Plus 2.23 / 57	2	2
1000		3	3
1200		4	3
1350		4	3
1600		4	4
2000		5	5
2500		7	6
3000		8	7
3200		9	8
4000		10	9
5000		13	11

NOTE: Other lengths available. Contact your local Schneider Electric representative for assistance.

NOTE: Service entrance devices can be ordered with an indoor type joint pack for those applications where the service head is outdoors and penetrates a wall such that the first joint is indoors. **Service entrance devices come standard with an outdoor type joint pack.** For indoor IP54 rated applications, an end cable tap box rated the same can be ordered.

Service Head Vertical

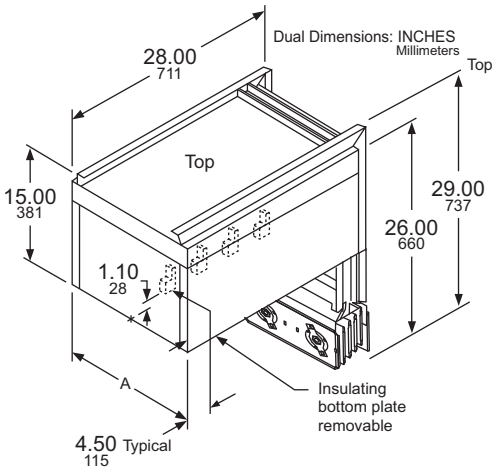

Figure 89: Catalog Number Suffix—29SV

Table 52: Service Head Vertical—Lug Specifications

Ampere Rating	A	Lugs Per Phase and Neutral 1/0-600 kcmil	Ground Lugs #6-300 kcmil
800	Housing Width Plus 2.23 / 57	2	2
1000		3	3
1200		4	3
1350		4	3
1600		4	4
2000		5	5
2500		7	6
3000		8	7
3200		9	8
4000		10	9
5000		13	11

NOTE: Other lengths available. Contact your local Schneider Electric representative.

1. Vertical service heads must be braced or supported near top, to withstand weight of cables, ice, wind, etc.
2. Refer to NEC Article 230.24 for required clearance of service drops over roof overhang or the ground.

© 1986–2017 Schneider Electric
All Rights Reserved

Transformer Tap (Three 1Ø Transformers)

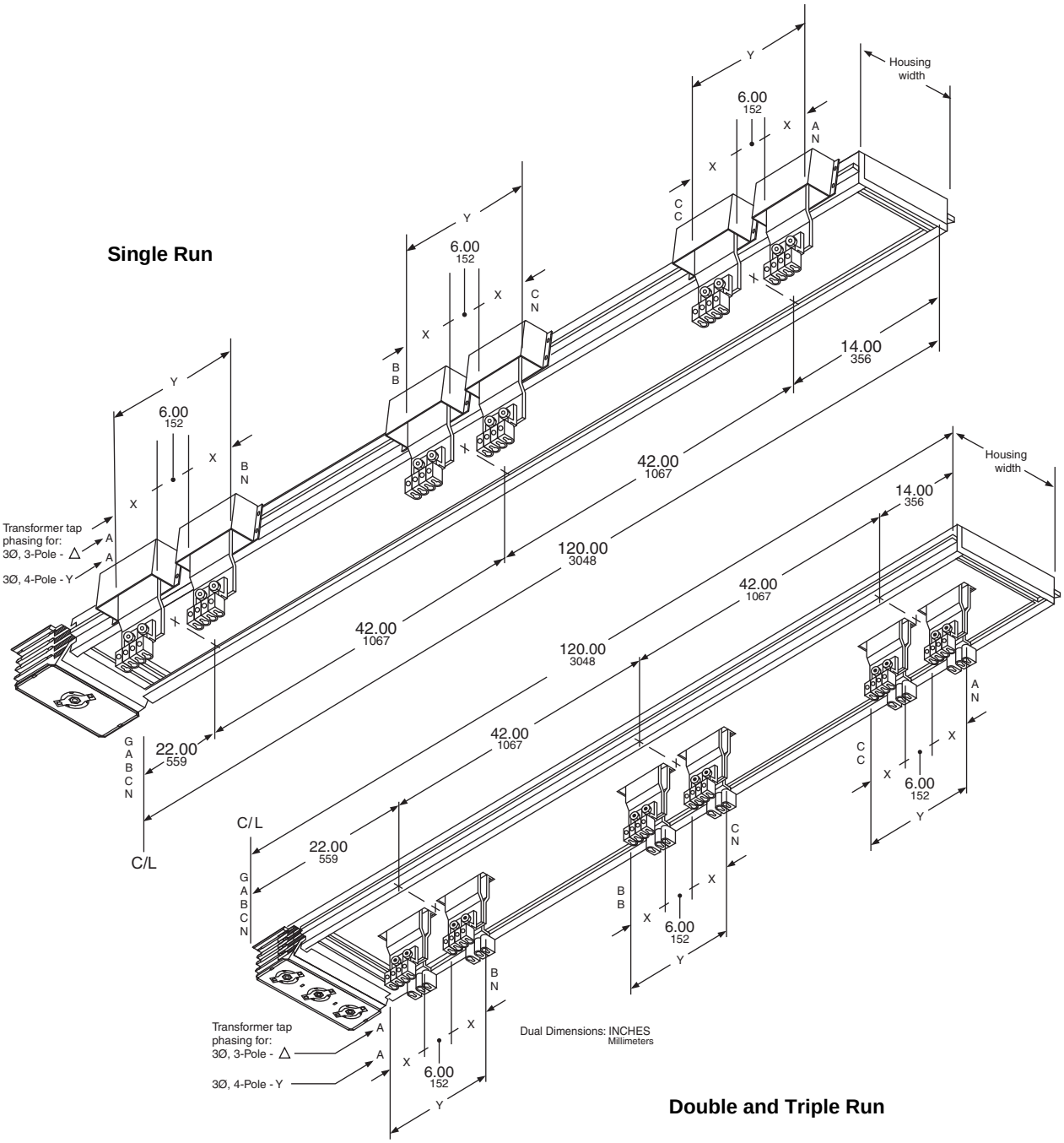

Figure 90: Catalog Number Suffix—TTF

© 1986–2017 Schneider Electric
All Rights Reserved

Table 53: Transformer Tap—Dimensions and Lug Specifications

Ampere Rating		X		Y		Lugs Per Phase and Neutral 1/0-600 kcmil	Ground Lugs #6-300 kcmil
Aluminum	Copper	IN	mm	IN	mm		
—	800	2.50	63	16.00	406	2	2
800	1000	3.00	76	16.50	419	2	2
1000	1200	4.00	102	17.50	444	3	3
—	1350	4.50	114	18.00	457	4	3
1200	—	5.00	127	18.50	470	4	3
—	1600	5.40	137	18.90	480	4	4
1350	—	6.00	152	19.50	495	4	3
—	2000	6.50	165	20.00	508	5	5
1600		7.50	190	21.00	533	4	4
2000	—	4.50	114	15.00	381	5	5
—	2500	4.50	114	15.00	381	7	6
2500	—	6.00	152	18.00	457	7	6
—	3000	5.00	127	16.00	406	8	7
3000	—	7.50	191	21.00	533	8	7
—	3200	6.00	152	18	457	9	8
—	4000	4.50	114	15.00	381	10	9
4000	—	6.50	165	19.00	483	10	9
—	5000	6.00	152	18.00	457	13	11

Bussed Transformer Connections

For throat and padmount type connections, see Figure 20 on page 29 and Figure 21 on page 30. For additional bus connection questions, contact your local Schneider Electric representative.

© 1986–2017 Schneider Electric
All Rights Reserved

Straight Length with Flanged Collar

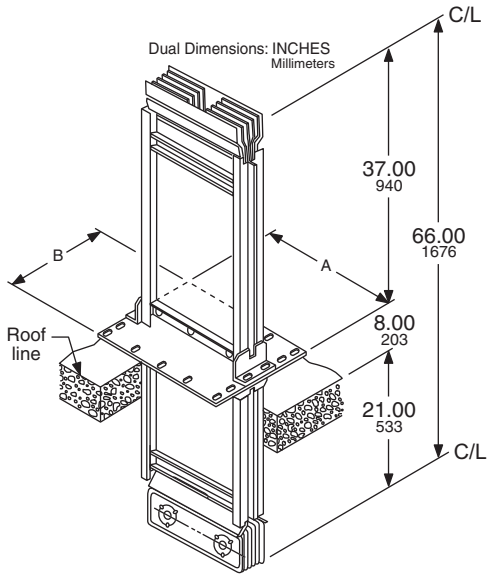

Figure 91: Catalog Number Suffix—66 FCS37B29

Table 54: Straight Length with Flanged Collar—Dimensions

Ampere Rating		A		B[1]	
Aluminum	Copper	IN	mm	IN	mm
—	800	9.38	238	13.18	335
800	1000	9.38	238	13.18	335
—	1200	11.00	279	13.18	335
1000	1350	11.00	279	13.18	335
1200	—	12.00	305	13.18	335
1350	1600	13.00	330	13.18	335
1600	2000	15.88	403	19.18	487
2000	2500	17.88	454	19.18	487
2500	3000	21.88	556	19.18	487
—	3200	21.88	556	19.18	487
3000	—	24.75	629	19.18	487
4000	4000	30.75	781	19.18	487
—	5000	30.75	781	19.18	487

NOTE: Other lengths and configurations available. Contact your local Schneider Electric representative for assistance.

1 4-Pole dimensions. For 3-Pole dimensions subtract 0.32 in. (8 mm).

For application information on Vertical Service Head Penetrating a Roof, see Table 17 on page 28.

Roof Flange Kit

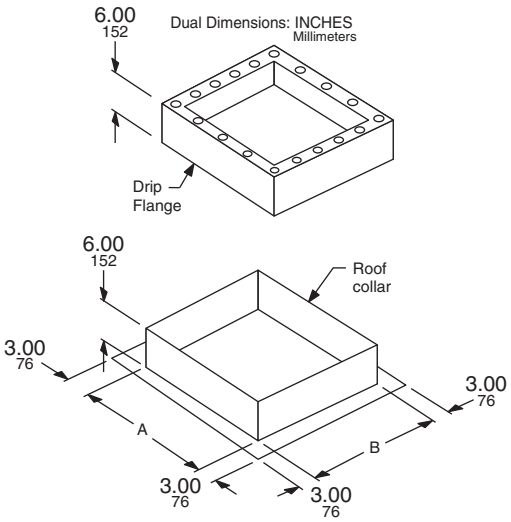

Figure 92: Roof Flange Kit

Table 55: Roof Flange Kit—Catalog Numbers

Ampere Rating		Catalog Number
Aluminum	Copper	
—	800	ACF-38-RF
800	1000	ACF-38-RF
—	1200	ACF-53-RF
1000	1350	ACF-53-RF
1200	—	ACF-63-RF
1350	1600	ACF-67-RF
1600	2000	ACF-78-RF
2000	2500	ACF-13-RF
2500	3000	ACF-15-RF
—	3200	ACF-15-RF
3000	—	ACF-19-RF
4000	4000	ACF-24-RF
—	5000	ACF-24-RF

NOTE:

1. Roof flange kit will accommodate roof slope up to one inch per foot. The roof flange kit consists of one drip flange and one roof collar and must be ordered separately from the straight length with flange collar (66FCS37B29).
2. For “A” and “B” dimensions, refer to table titled “Straight Length with Flanged Collar—Dimensions” on page 89.

© 1986–2017 Schneider Electric
All Rights Reserved

Adapter (Indoor Only)—I-Line to I-Line II

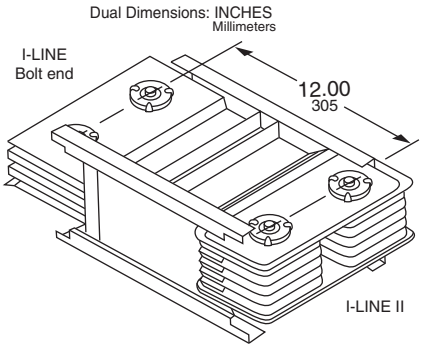

Catalog Number Suffix—12B

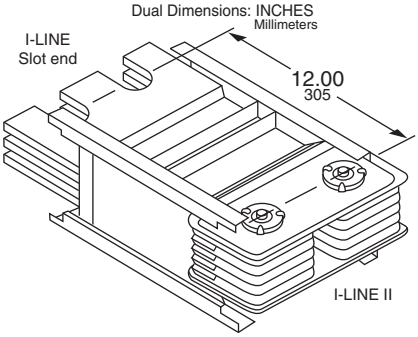

Catalog Number Suffix—12S

Figure 93: Adapter (Indoor Only)

NOTE: Contact the factory if connecting to Series I I-Line™ busway before ordering for coordination of joint and adapter details.

Phase Transition (Indoor Only)

3-Pole	Catalog # Suffix
180° Transition A C B B C A	PT

4-Pole	Catalog # Suffix
180° Transition A N B C C B N A	PT
180° Neutral Transition A N B A C B N C	PTN
A and C Phase Transition A C B B C A N N	PTAC

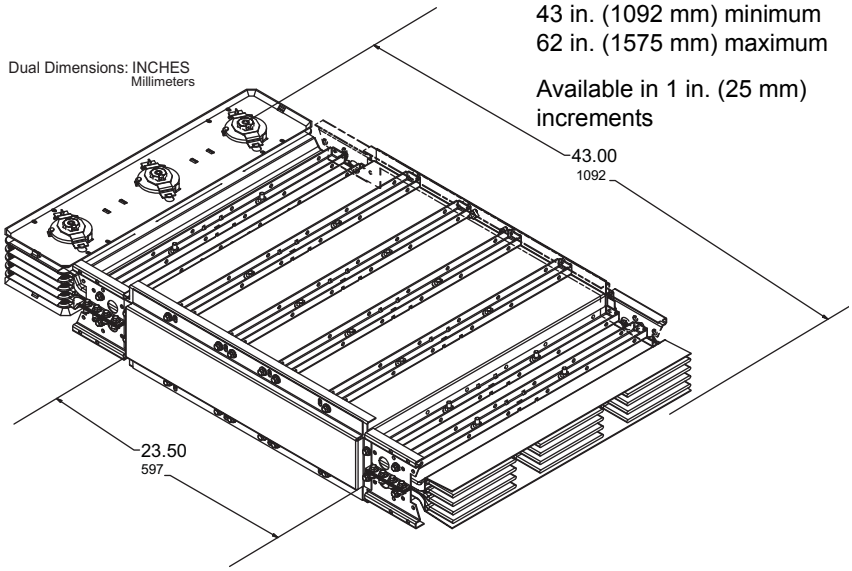

Figure 94: Phase Transition (Indoor Only)

© 1986–2017 Schneider Electric
All Rights Reserved

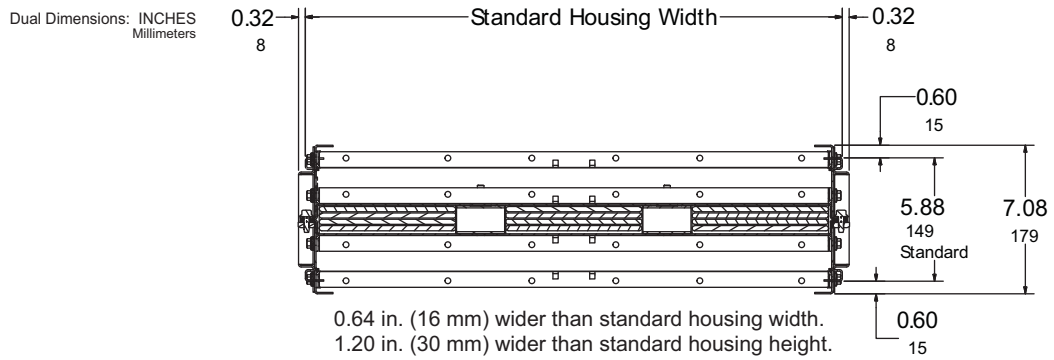

Figure 95: Phase Transition X-Section

Hanger (Horizontal Flatwise)

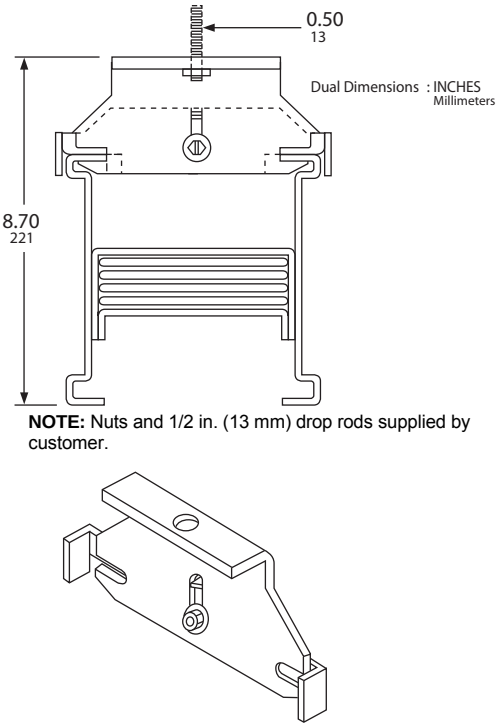

Figure 96: Hanger (Horizontal Flatwise)

NOTE: See the hanger spacing installation requirements in “Hanger Spacing” on page 38.

Table 56: Hanger (Horizontal Flatwise)—Catalog Numbers

Ampere Rating		Catalog Number
Aluminum	**Copper**	
—	800	HF-38-F
800	1000	HF-43-F
1000	1200	HF-53-F
—	1350	HF-58-F
1200	—	HF-63-F
—	1600	HF-67-F
1350	—	HF-73-F
—	2000	HF-78-F
1600	—	HF-88-F

© 1986–2017 Schneider Electric
All Rights Reserved

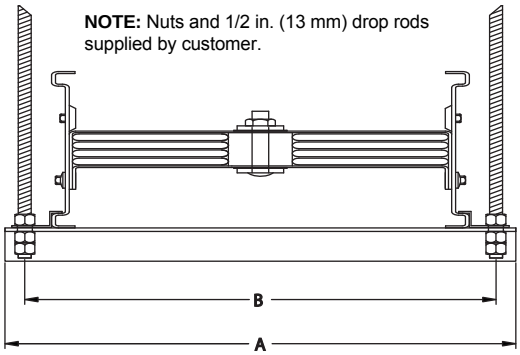

Figure 97: Hanger (Horizontal Flatwise) Dimensions

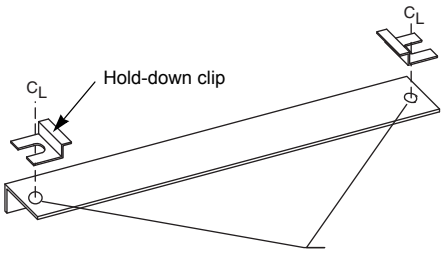

Figure 98: Hanger Hold-Down Clips

Table 57: Hanger (Horizontal Flatwise)—Catalog Numbers and Dimensions

Ampere Rating		Catalog Number	A		B	
Aluminum	Copper		IN	mm	IN	mm
2000	2500	HF-13-F	16.22	412	14.72	374
—	3000	HF-15-F	18.72	475	17.22	437
2500	3200	HF-16-F	19.72	501	18.22	463
3000	—	HF-19-F	22.22	564	20.72	526
—	4000	HF-24-F	27.10	688	25.60	650
—	5000	HF-25-F	28.60	726	27.10	688
4000	—	HF-26-F	29.10	739	27.60	701

NOTE: Hold-down clips may be ordered separately (catalog no. 45110-200-01). Two are required for each hanger. Please contact your local Schneider Electric representative.

Hanger (Horizontal Edgewise)

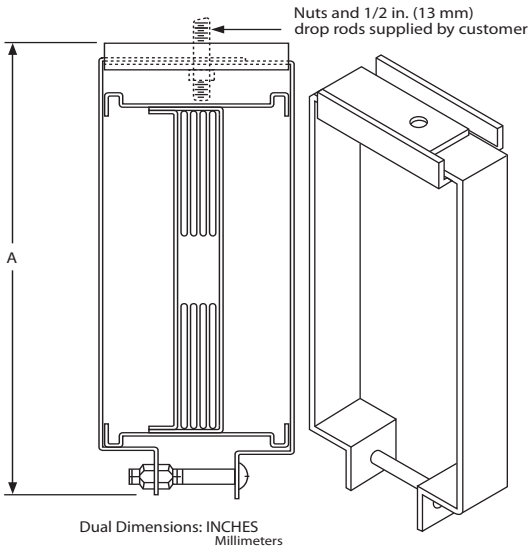

Figure 99: Hanger (Horizontal Edgewise)

Table 58: Hanger (Horizontal Edgewise)—Dimensions and Catalog Numbers

Ampere Rating		A		Catalog Number
Aluminum	Copper	IN	mm	
800	800	8.36	212	HF-43-E
—	1000	8.36	212	HF-43-E
1000	1200	9.86	250	HF-58-E
—	1350	9.86	250	HF-58-E
1200	1600	10.86	276	HF-67-E
1350	2000	11.86	301	HF-78-E
1600	—	13.86	339	HF-88-E
2000	2500	17.24	438	HF-13-E
—	3000	19.74	501	HF-15-E
2500	3200	20.74	527	HF-16-E
3000	—	24.12	613	HF-19-E
—	4000	28.12	714	HF-24-E
4000	5000	29.62	752	HF-26-E

© 1986–2017 Schneider Electric
All Rights Reserved

Sway Brace Collar

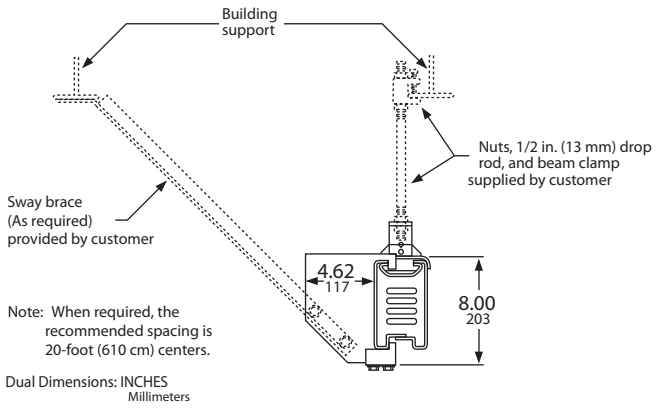

Figure 100: Catalog Number HP-1-SBC

Sway braces are used when only one side of the busway is heavily loaded with tap-off units or when other factors could cause possible swaying of the busway.

Hanger (Vertical Fixed)

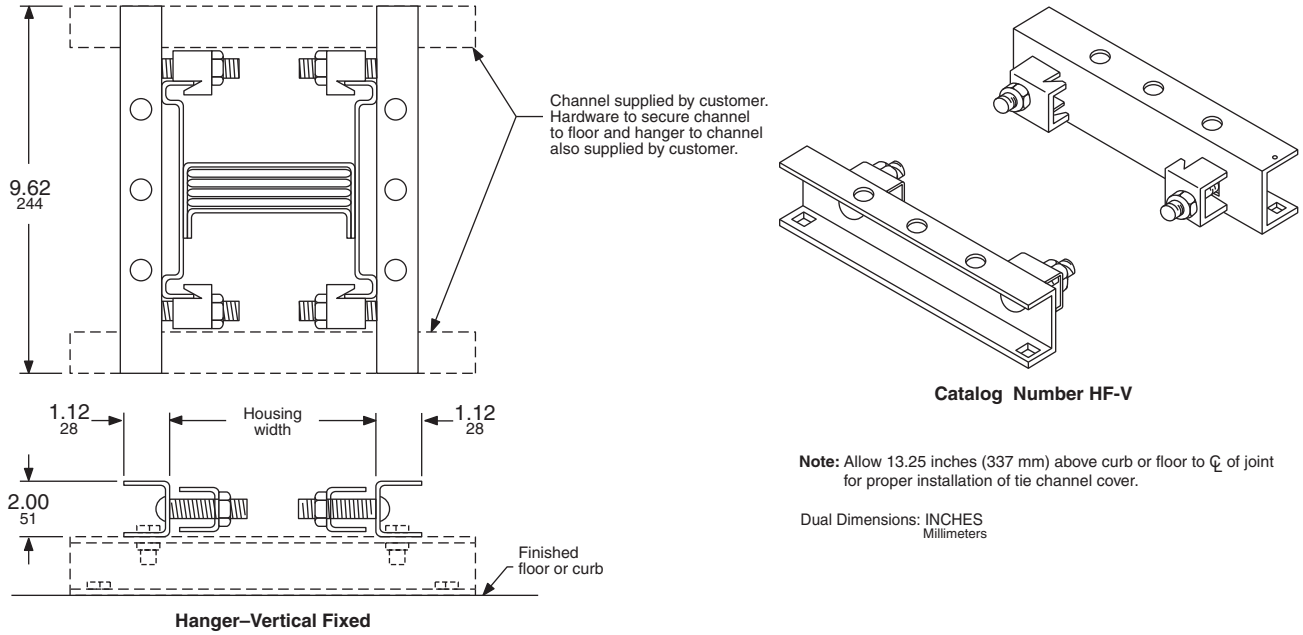

Figure 101: Hanger (Vertical Fixed)

© 1986–2017 Schneider Electric
All Rights Reserved

Hanger (Vertical Spring)

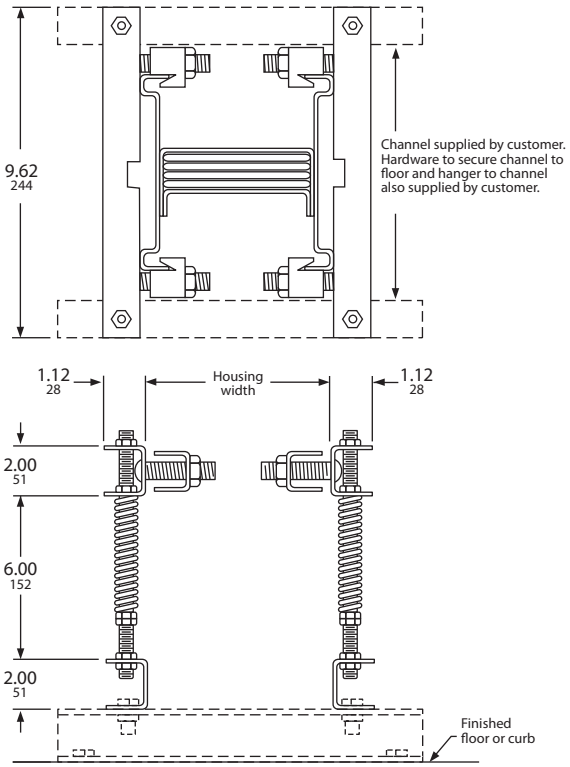

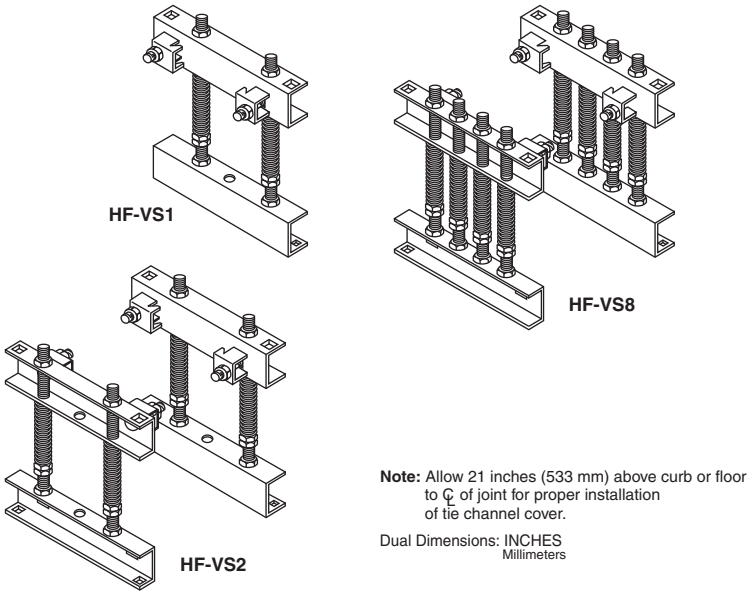

NOTE: Check with spring hanger instruction bulletin no. 45123-930-01C for common notes, including the consideration of the plug-in unit weights in the overall weight of the busway stack.

Figure 102: Hanger (Vertical Spring)

Table 59: Hanger (Vertical Spring)—Catalog Numbers

Thermal Ampere Rating		Housing Reference	Catalog Number
Aluminum	Copper		
—	800	3.84	HFVS1
800	1000	4.34	HFVS1
—	1200	5.34	HFVS1
1000	—	5.34	HFVS1
1200	—	6.34	HFVS1
1350	—	7.34	HFVS1
1600	—	8.84	HFVS1
—	1350	5.84	HFVS2
—	1600	6.74	HFVS2
—	2000	7.84	HFVS2
2000	—	12.72	HFVS2
2500	—	16.22	HFVS2
—	2500	12.72	HFVS8
—	3000	15.22	HFVS8
—	3200	16.22	HFVS8
3000	—	18.72	HFVS8
—	4000	23.60	HFVS8
—	5000	25.10	HFVS8
4000	—	25.60	HFVS8

© 1986–2017 Schneider Electric
All Rights Reserved

Hanger (Horizontal Seismic)

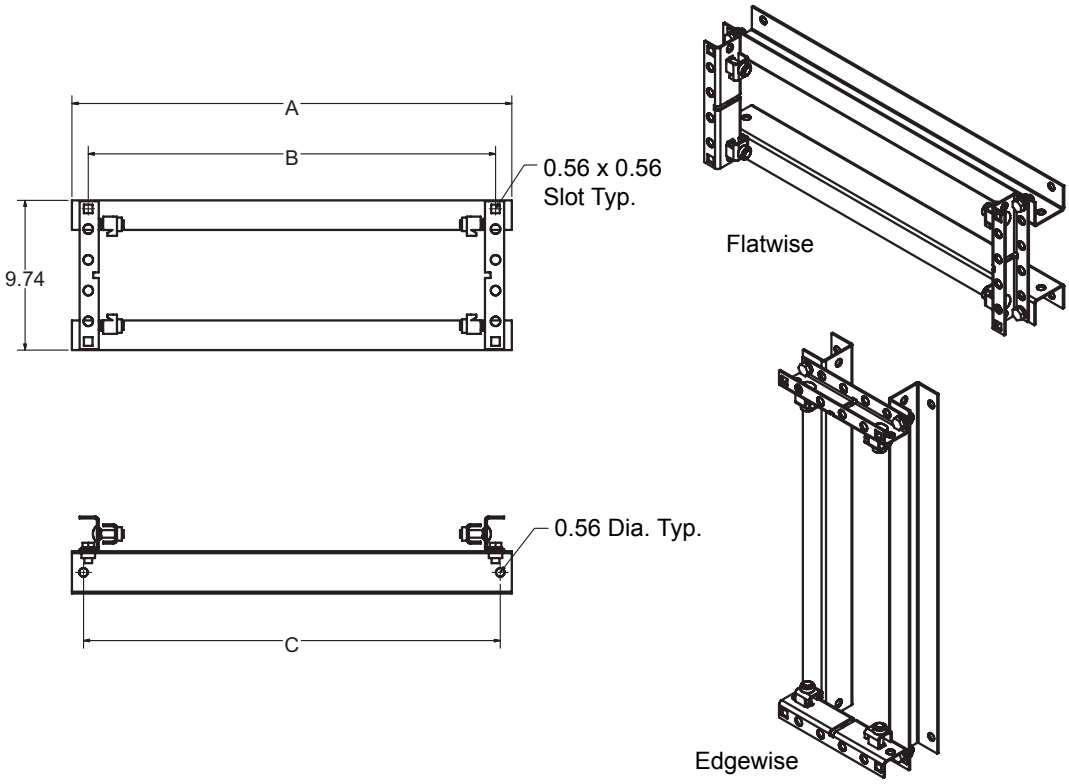

Figure 103: Hanger (Horizontal Seismic)

Table 60: Horizontal Seismic Hanger—Dimensions

Ampere Rating		Catalog Number	A		B		C	
Aluminum	Copper		IN	mm	IN	mm	IN	mm
—	800	HF38SH	7.34	186	5.22	133	5.84	148
800	1000	HF43SH	7.84	199	5.72	145	6.34	161
1000	1200.	HF53SH	8.84	225	6.72	171	7.34	186
—	1350	HF58SH	9.34	237	7.22	183	7.84	199
1200	—	HF63SH	9.84	250	7.72	196	8.34	212
—	1600	HF67SH	10.24	260	8.12	206	8.74	222
1350	—	HF73SH	10.84	275	8.72	221	9.34	237
—	2000	HF78SH	11.34	288	9.22	234	9.84	250
1600	—	HF88SH	12.34	313	10.22	260	10.84	275
2000	2500	HF13SH	16.22	412	14.10	358	14.72	374
—	3000	HF15SH	18.72	475	16.60	422	17.22	437
2500	3200	HF16SH	19.72	501	17.60	447	18.22	463
3000	—	HF19SH	22.22	564	20.10	511	20.72	526
—	5000	HF25SH	28.60	726	26.48	673	27.10	688
—	4000	HF24SH	27.10	688	24.98	634	25.60	650
4000	—	HF26SH	29.10	739	26.98	685	27.60	701

NOTE: For seismic applications, seismic hangers must be used for horizontally mounted busway. Standard vertical hangers should be used for vertically mounted busway.

© 1986–2017 Schneider Electric
All Rights Reserved

Wall and Floor Flange

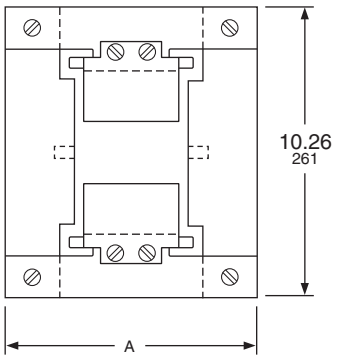

Figure 104: Four-Piece Closing Plate for Finished Look

Table 61: Wall and Floor Flange—Dimensions and Catalog Numbers

Ampere Rating		A		Catalog Number
Aluminum	Copper	IN	mm	
—	800	8.32	211	ACF-38-WF
800	1000	8.82	224	ACF-43-WF
1000	1200	9.82	249	ACF-53-WF
—	1350	10.32	262	ACF-58-WF
1200	—	10.82	275	ACF-63-WF
—	1600	11.22	285	ACF-67-WF
1350	—	11.82	300	ACF-73-WF
—	2000	12.32	313	ACF-78-WF
1600	—	13.32	338	ACF-88-WF
2000	2500	17.20	437	ACF-13-WF
—	3000	19.70	500	ACF-15-WF
2500	3200	20.70	526	ACF-17-WF
3000	—	23.20	589	ACF-19-WF
—	4000	28.08	713	ACF-24-WF
—	3200	20.7	526	ACF-17-WF
—	5000	29.58	751	ACF-25-WF
4000	—	30.08	764	ACF-26-WF

© 1986–2017 Schneider Electric
All Rights Reserved

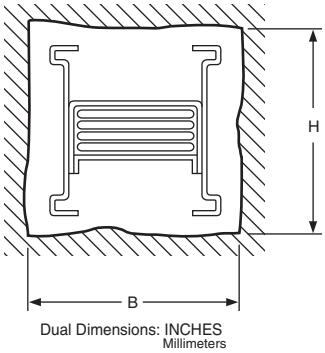

Figure 105: Required Wall / Floor Opening

Table 62: Wall and Floor Required Cut-Outs—Dimensions

Ampere Rating		Indoor Str. Lnth.		Outdoor Str. Lnth.		Fl. End		Flatwise Elbow[1]							Edgewise Elbow[1]						
								H	B (Various Wall Thickness)						B	H (Various Wall Thickness)					
Alum.	Copper	B	H	B	H	B	H		4	8	12	16	20	24		4	8	12	16	20	24
—	800	6	8	8	9	10	21	8	9	11	13	15	17	19	6	12	14	16	18	20	24
800	1000	6	8	9	9	10	21	8	10	12	14	16	18	20	6	12	14	16	18	20	22
1000	1200	7	8	10	9	11	21	8	12	14	16	18	20	22	7	12	14	16	18	20	22
—	1350	8	8	10	9	12	21	8	12	14	16	18	20	22	8	12	14	16	18	20	22
1200	—	8	8	11	9	13	21	8	13	15	17	19	21	23	8	12	14	16	18	20	22
1350	1600	9	8	12	9	14	21	8	14	16	18	20	22	24	9	12	14	16	18	20	22
—	2000	10	8	12	9	17	21	8	15	17	19	21	23	25	10	12	14	16	18	20	22
1600	—	11	8	13	9	17	21	8	17	19	21	23	25	27	11	12	14	16	18	20	22
2000	2500	15	8	17	9	19	21	8	22	24	26	28	30	32	15	12	14	16	18	20	22
—	3000	17	8	20	9	23	21	8	26	28	30	32	34	36	17	12	14	16	18	20	22
2500	3200	18	8	21	9	23	21	8	27	29	31	33	35	37	18	12	14	16	18	20	22
3000	—	21	8	23	9	26	21	8	31	33	35	37	39	41	21	12	14	16	18	20	22
—	4000	26	8	28	9	32	21	8	37	39	41	43	45	47	26	12	14	16	18	20	22
—	5000	27	8	30	9	32	21	8	40	42	44	46	48	50	27	12	14	16	18	20	22
4000	—	28	8	30	9	32	21	8	40	42	44	46	48	50	28	12	14	16	18	20	22

[1] All dimensions are shown in inches. To convert to millimeters, multiply the dimension in inches by 25.4.

© 1986–2017 Schneider Electric
All Rights Reserved

End Closure (Indoor Only)

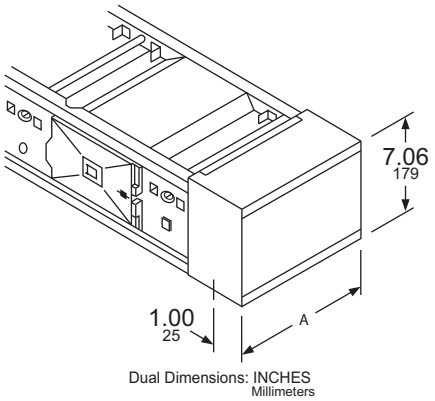

Figure 106: End Closure (Indoor Only)

Table 63: End Closure (Indoor)-Dimensions and Catalog Numbers

Ampere Rating		A		Catalog Number
Aluminum	Copper	IN	mm	
—	800	4.34	110	ACF-38-EC
800	1000	4.84	123	ACF-43-EC
1000	1200	5.84	148	ACF-53-EC
—	1350	6.34	161	ACF-58-EC
1200	—	6.84	174	ACF-63-EC
—	1600	7.24	184	ACF-67-EC
1350		7.84	199	ACF-73-EC
—	2000	8.34	212	ACF-78-EC
1600	—	9.34	237	ACF-88-EC
2000	2500	13.22	336	ACF-13-EC
—	3000	15.72	399	ACF-15-EC
2500	3200	16.72	425	ACF-17-EC
3000	—	19.22	488	ACF-19-EC
—	4000	24.10	612	ACF-24-EC
4000	—	26.10	663	ACF-26-EC
—	5000	25.60	650	ACF-25-EC

NOTE: Values are for thermal-rated busway. Contact Schneider Electric for other options such as low current density rated, harmonic rated, and IP54 rated.

© 1986–2017 Schneider Electric
All Rights Reserved

Section 9—I-Line™ Plug-In Units—Bus Plugs

Plug-In Catalog Numbering System

Catalog numbers are composed of two basic parts—the **prefix** plus the **suffix**. The **prefix** contains the general descriptive details of the plug-in unit and outline on pages 100–124. The **suffix** defines the exact device type.

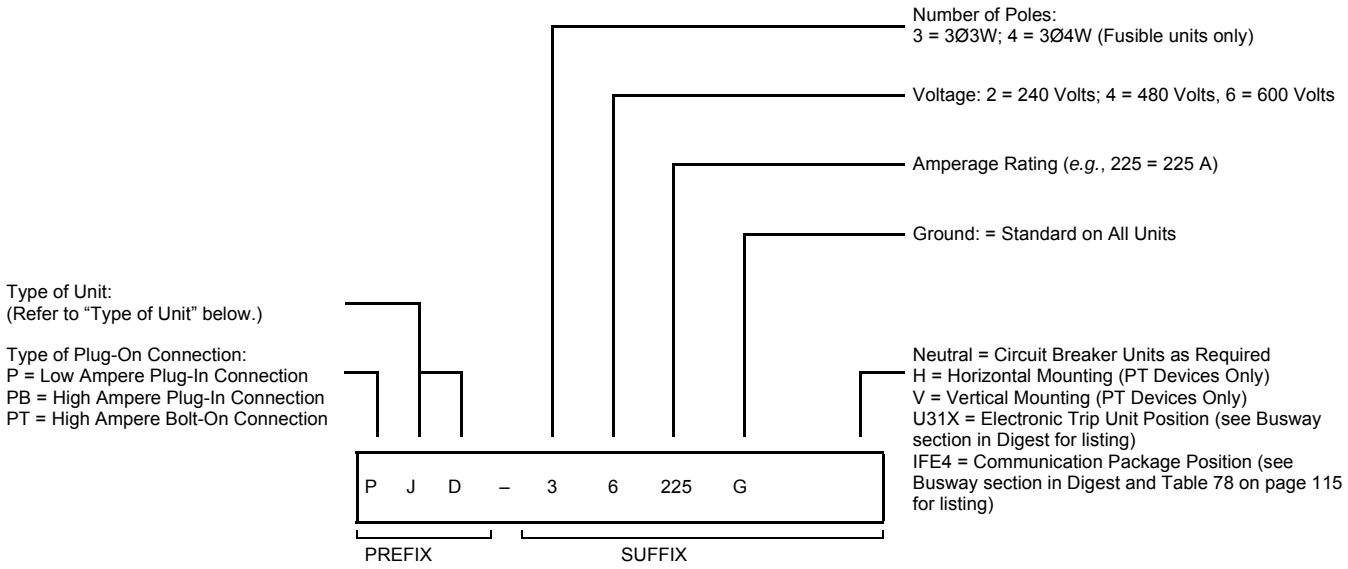

Type of Unit

Table 64: Maximum Amperage for Unit Types

Type	Amperage
Q-Fusible Unit	1200 A Maximum
S-Fusible Vertical Riser Unit	200 A Only
FA-FA Frame Circuit Breaker Unit	100 A Maximum
FH-FH Frame Circuit Breaker Unit	100 A Maximum
HD-HD Frame Circuit Breaker Unit	150 A Maximum
HG-HG Frame Circuit Breaker Unit	150 A Maximum
HJ-HJ Frame Circuit Breaker Unit	150 A Maximum
HL-HL Frame Circuit Breaker Unit	150 A Maximum
JD-JD Frame Circuit Breaker Unit	250 A Maximum
JG-JG Frame Circuit Breaker Unit	250 A Maximum
JJ-JJ Frame Circuit Breaker Unit	250 A Maximum
JL-JL Frame Circuit Breaker Unit	250 A Maximum
LD-LD Frame Circuit Breaker Unit	600 A Maximum

Type	Amperage
LG-LG Frame Circuit Breaker Unit	600 A Maximum
LJ-LJ Frame Circuit Breaker Unit	600 A Maximum
LL-LL Frame Circuit Breaker Unit	600 A Maximum
LR-LR Frame Circuit Breaker Unit	600 A Maximum
MG-MG Frame Circuit Breaker Unit	800 A Maximum
MJ-MJ Frame Circuit Breaker Unit	800 A Maximum
PG-PG Frame Circuit Breaker Unit	1200 A Maximum
PJ-PJ Frame Circuit Breaker Unit	1200 A Maximum
RG-RG Frame Circuit Breaker Unit	1600 A Maximum
RJ-RJ Frame Circuit Breaker Unit	1600 A Maximum
RL-RL Frame Circuit Breaker Unit	1600 A Maximum

NOTE: Special purpose plug-in devices are not defined by this catalog numbering system. Consult the factory for catalog numbering details for these devices.

© 1986–2017 Schneider Electric
All Rights Reserved

Compatibility

All non-IP54 plug-in units in this catalog can be used on original I-Line as well as I-Line II busway. There is no need to stock two different types of units.

Fusible

All plug-in switches contain a heavy-duty safety switch mechanism.

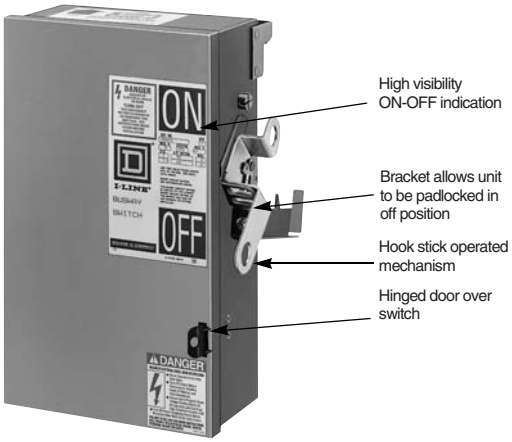

Figure 107: Fusible Unit

Circuit Breakers

Molded case circuit breaker plug-in devices are available in frame sizes of 100 A (FA)–1600 A (RG) with standard, high-interrupting, current-limiting, and solid-state trip circuit breakers.

The operating handle gives visual indication of tripped status for all devices as well as floor operable reset on all devices. The FA frame circuit breaker unit would fit into the same enclosure as the standard molded case breaker shown below.

The mounting and the interlock are identical to the fusible unit shown above.

The short circuit ratings for circuit breaker devices are listed on page 104.

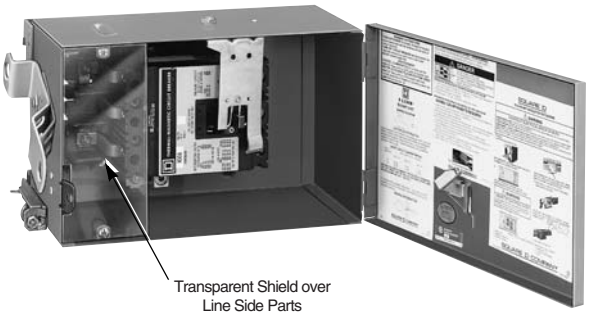

Figure 108: Standard Molded Case Circuit Breaker

© 1986–2017 Schneider Electric
All Rights Reserved

Circuit Breakers with Communications

Busway plug-in units are available with optional communication capabilities.

NOTE: The communications box is not available as standalone.

© 1986–2017 Schneider Electric
All Rights Reserved

Plug-In Device Mounting

Plug-in units are positioned along the busway length by notches in the busway housing top that accept the mounting hooks of the plug-in unit. This aligns the plug-in unit connectors with the plug-in opening. After the unit is positioned on the busway, it is allowed to swing down into the plug-in opening where the connectors make contact with the bus bars. This is accomplished in a “hook-swing” sequence of motions.

Figure 109: Plug-In Device Mounting

Interlock

Plug-in devices rated for 30–250 A are interlocked with the busway housing to prevent installation or removal of the unit when the disconnect is turned ON. All devices incorporate an interlock to prevent the door over the disconnect from being opened when the unit is ON. This door interlock can be defeated from outside the unit.

Figure 110: Interlock

Grounding

All plug-in units come with standard grounding means. A grounding spring cuts through the busway paint and forms an electrical ground continuity. An equipment ground is established before the phase jaws make contact with the bus bars by means of a grounding stab, which then makes contact with two ground jaws on the busway. A ground lug on the inside of the plug-in unit is provided for the purpose of attaching a ground wire.

Splash Resistant Feature (Optional)

Plug-in units installed on IP54 busway also require protection from occasional water exposure, such as roof leaks or sprinklers. The plug-in unit splash resistant feature is tested per the IEC 60529 standard and is rated IP54. This feature is available as an option for most plug-in unit enclosures and is identified by the addition of “M54” at the end of the standard catalog number.

IP54 plug-in units are designed to be installed only on I-Line II IP54 busway.

Figure 111: Grounding Spring

© 1986–2017 Schneider Electric
All Rights Reserved

Special Purpose Plug-In Devices

- Combination motor starter from NEMA Size 0–Size 2: fusible or circuit breaker primary disconnect
- Lighting contactor: 30 A, 60 A, 100 A, fusible disconnect
- Magnetic contactor from NEMA Size 0–Size 2: Fusible or circuit breaker primary disconnect
- Ground detector and neutralizer: used to provide means for indicating grounds on an ungrounded 3-phase system and to create a discharge path for static electricity. Consult the factory for dimensional details.
- Capacitor banks: 2.5 kVAR–30 kVAR auxiliary devices mount directly on busway prewired for use with separate fusible or circuit breaker disconnect. Consult the factory for dimensional details.
- Single-phase transformer plug-in devices from 1 kVA–10 kVA: auxiliary devices mount directly on busway prewired for use with separate fusible or circuit breaker disconnect. Consult the factory for dimensional details.
- Surge protection devices: 160 kA and 240 kA, circuit breaker disconnect

Table 65: Special Purpose Plug-In Devices–Horsepower Rating

UL Horsepower Rating		Motor–3-Phase Horsepower Rating	
	Plug-In Unit Ampere Rating	Fusible Switch	
		Standard	Maximum
240 Vac	30	3	7.5
	60	7.5	15
	100	15	30
	200	25	60
	400	—	—
	600	—	—
480 Vac	30	5	15
	60	15	30
	100	25	30
	200	50	125
	400	—	—
	600	—	—
600 Vac	30	7.5	20
	60	15	50
	100	30	60
	200	60	150
	400	125	350
	600	250	500

© 1986–2017 Schneider Electric
All Rights Reserved

Interrupting Capacity of Fusible Switch Plug-In Units

Type PQ Fusible Switch Low Ampere Plug-In Connection

Type PBLG Circuit Breaker High Ampere Plug-In Connection

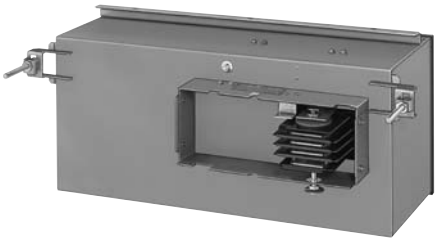

Type PTMG Circuit Breaker High Ampere Bolt-On Connection

Figure 112: Fusible Switch Plug-In Units

Table 66: Fusible Switch Plug-In Units Capacity

Catalog Number Prefix	Current Rating	Fuse Class (Includes 240 V, 480 V, and 600 V)			
		K or H	J[1]	R	L
PQ	30	10,000	200,000	200,000	—
PQ	60	10,000	200,000	200,000	—
PQ	100	10,000	200,000	200,000	—
PQ & PS	200	10,000	200,000	200,000	—
PBQ	400	10,000	100,000	100,000	—
PBQA	400	—	100,000	100,000	—
PBQ	600	10,000	100,000	100,000	—
PTQ	800	—	—	—	100,000
PTQ	1000	—	—	—	100,000
PTQ	1200	—	—	—	100,000

[1] Provisions for installing class J fuses are included in 600 V devices only.

Interrupting Capacity of Circuit Breaker Plug-In Units

Table 67: Circuit Breaker Plug-In Units Capacity

Catalog Number Prefix	Trip Range (Amperes)	Interrupting Rating–RMS Symmetrical Amperes		
		240 Vac	480 Vac	600 Vac
With Molded Case Circuit Breakers				
PFA	15–100	25000	18000	14000
PFH	15–100	65000	25000	18000
PHD	15–150	25000	18000	14000
PHG	15–150	65000	35000	18000
PHJ	15–150	100000	65000	25000
PHL	15–150	125000	100000	50000
PJD	175–250	25000	18000	14000
PJG	175–250	65000	35000	18000
PJJ	175–250	100000	65000	25000
PJL	175–250	125000	100000	50000
PBLD	250–600	25000	18000	14000
PBLG	250–600	65000	35000	18000
PBLJ	250–600	100000	65000	25000
PBLL	250–600	125000	100000	50000
PBLR	250–600	200000	200000	100000
PTMG	300–800	65000	35000	18000
PTMJ	300–800	100000	65000	25000
PTPG	250–1200	65000	35000	18000
PTPJ	250–1200	100000	65000	25000
PTRG	600–1600	65000	35000	18000
PTRJ	600–1600	100000	65000	25000
PTRL	600–1600	125000	100000	50000

© 1986–2017 Schneider Electric
All Rights Reserved

Required Clearances for Plug-In Unit Mounting

NOTES:

1. Check these dimensions carefully before installing busway lengths.
2. For required working clearances, consult the National Electrical Code/Canadian Electrical Code.

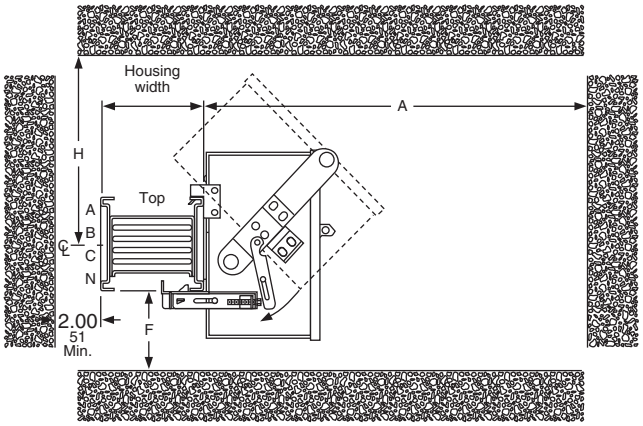

Figure 113: Required Clearances for Plug-In Units

Table 68: Required Clearances for Plug-In Unit Mounting

Circuit Breaker without Communications		A[1]		F		H	
Cat. No. Prefix	**Ampere Rating**	**IN**	**mm**	**IN**	**mm**	**IN**	**mm**
PFA, PFH	15–100	20.87	530	2.12	54	10.00	254
PHD, PHG, PHJ, PHL	15–150	25.63	651	2.38	60	11.00	279
PJD, PJG, PJJ, PJL	175–250	25.63	651	2.38	60	11.00	279
PBLD, PBLG, PBLJ, PBLL, PBLR	250–600	35.00	889	8.00	203	20.00	508
PTMG, PTMJ, PTPG, PTPJ	250–1200	37.00	940	10.25	260	13.75	349
PTRG, PTRJ, PTRL	600–1600	41.81	1062	12.59	320	13.84	352
Circuit Breaker with Communications		**A[1]**		**F**		**H**	
Cat. No. Prefix	**Ampere Rating**	**IN**	**mm**	**IN**	**mm**	**IN**	**mm**
PHD, PHG, PHJ, PHL	15–150	30.40	772	11.38	289	11	279
PJD, PJG, PJJ, PJL	175–250	30.40	772	11.38	289	11	279
PBLD, PBLG, PBLJ, PBLL, PBLR	250–600	38.58	980	17	432	20	506
Fusible Switch		**A[1]**		**F**		**H**	
Cat. No. Prefix	**Ampere Rating**	**IN**	**mm**	**IN**	**mm**	**IN**	**mm**
PQ	30	15.22	387	7.98	203	8.00	203
	60	15.22	387	7.98	203	8.00	203
	100	15.22	387	11.98	304	8.00	203
	200	27.50	699	15.00	381	15.00	381
PS	200	27.50	699	9.00	229	12.00	305
PBQ	400	48.00	1219	7.25	184	18.00[2]	457
	600	48.00	1219	7.25	184	18.00[2]	457
PTQ	800	40.00	1016	10.25	260	13.60	345
	1000	40.00	1016	10.25	260	13.60	345
	1200	40.00	1016	10.25	260	13.60	345

1 Includes depth of plug-in unit and swing clearance for load side door.

2 Horizontal only. This dimension is 14 in. (356 mm) for vertical applications.

© 1986–2017 Schneider Electric
All Rights Reserved

Vertical Mounting

Fusible Units

Fusible switch plug-in units (30–100 A) mount on either side of the vertical busway and comply with NEC Article 404.6 and CEC Article 14.502 concerning gravity tending to close a switch blade. With unit mounted on one side of the busway, the operating handle is on top and when mounted on the opposite side, the handle is on the bottom. The 200 A fusible unit (“PS”) mounts only on the front of the busway. (“TOP” sticker on the busway is on the right.) The operating handle is on the right side of the mounted unit.

The 400–1200 A fusible units mount only on the front of the busway. The operating handle is on the cover.

NOTE: Orientation of the busway is essential for proper mounting of plug-in units. The busway must be positioned so that the top marking is to the right and the neutral position is to the left.

Circuit Breaker Units

Circuit breaker plug-in units (15–250 A) can be installed on both sides of a riser. However, when the handle of the plug-in unit is operated vertically rather than rotationally or horizontally, the handle in the up position must be the ON position.

Fusible Switch Plug-In Units—30–100 A (Type “PQ”)

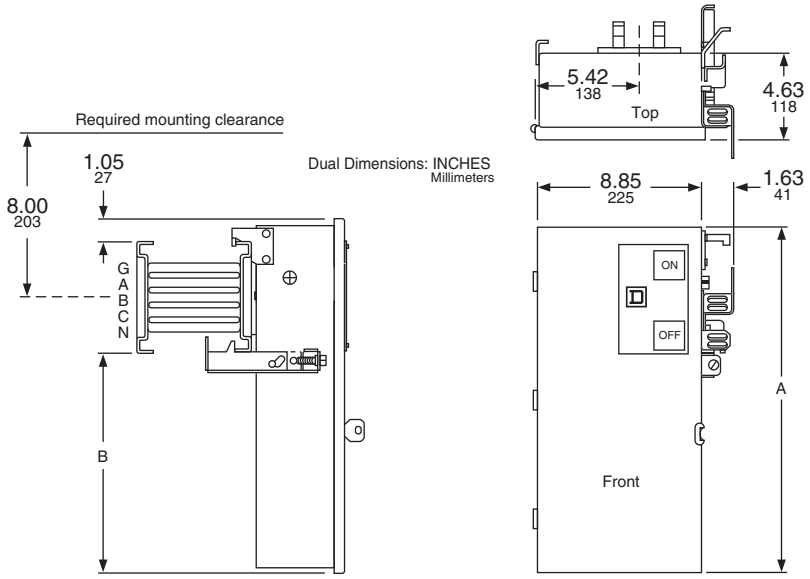

Figure 114: Fusible Switch Plug-In Units—30–100 A (Type “PQ”)

Table 69: Fusible Switch Plug-In Units—30–100 A (Type “PQ”) Specifications

Fusible Switch		Weight		Lugs Per Phase		Lugs Per Neutral		Ground Lugs		A		B	
Cat. No. Prefix	Ampere Rating	Lb	Kg	Qty.	Size	Qty.	Size	Qty.	Size	IN	mm	IN	mm
PQ	30	15.0	33.0	1	#12 – #2	1	#12 – #1/0	1	#10 – #2	14.95	379	7.98	203
	60	15.0	33.0	1	#12 – #2	1	#12 – #1/0	1	#10 – #2	14.95	379	7.98	203
	100	17.0	37.5	1	#12 – #1/0	1	#12 – #1/0	1	#10 – #2	18.97	480	11.98	304

NOTE: A PQ100N kit is available to convert a 3-wire unit to a 4-wire unit.

NOTE: These units are available with the IP54 option. Contact Schneider Electric for IP54 enclosure dimensions.

© 1986–2017 Schneider Electric
All Rights Reserved

Fusible Switch Plug-In Unit—200 A (Type “PQ”)

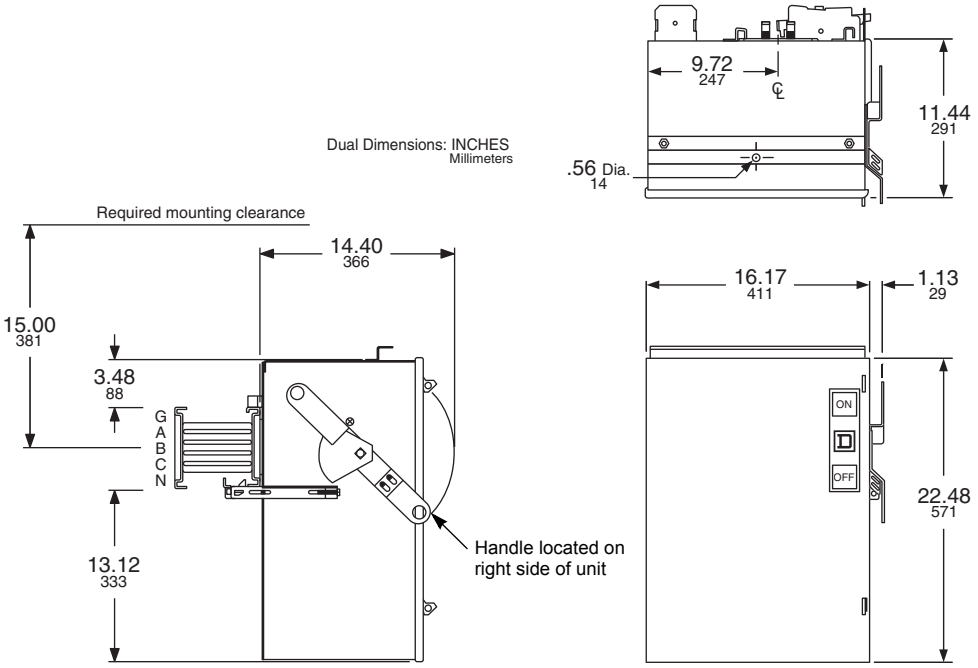

Figure 115: Fusible Switch Plug-In Unit—200 A (Type “PQ”)

Table 70: Fusible Switch Plug-In Unit—200 A (Type “PQ”) Specifications

Fusible Switch		Weight (Approx.)		Lugs Per Phase and Neutral		Ground Lugs	
Cat. No. Prefix	**Ampere Rating**	**Lb**	**Kg**	**Qty.**	**Size**	**Qty.**	**Size**
PQ[1]	200	71	32	1	#6-300 kcmil	1	#10-2/0

[1] 200 A “PQ” units are for use primarily on horizontally mounted busway. Refer to “PS” units for use primarily on vertically mounted busway.

These units are available with the IP54 option. Contact Schneider Electric for IP54 enclosure dimensions.

© 1986–2017 Schneider Electric
All Rights Reserved

Fusible Switch Plug-In Unit—200 A (Type “PS”)

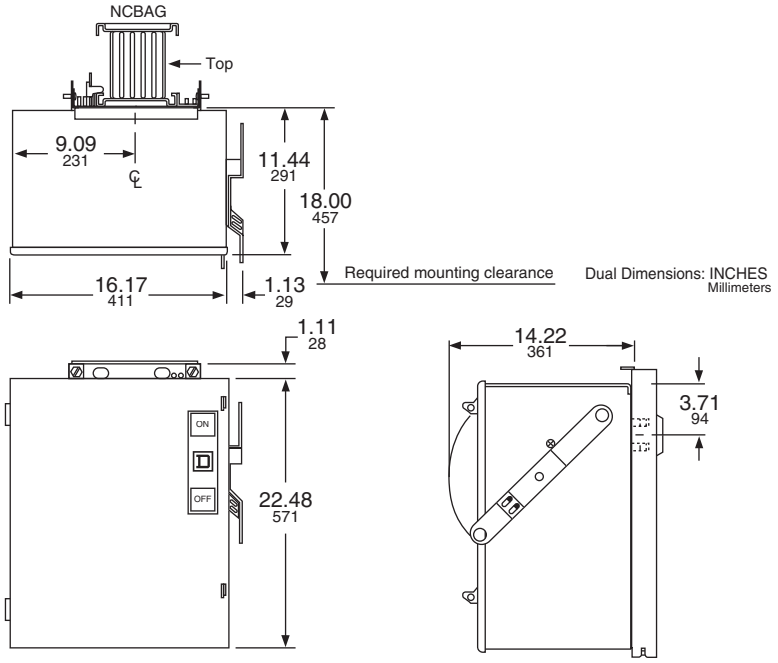

Figure 116: Fusible Switch Plug-In Unit—200 A (Type “PS”)

Table 71: Fusible Switch Plug-In Unit—200 A (Type “PS”) Specifications

Fusible Switch		Weight (Approx.)		Lugs Per Phase and Neutral		Ground Lugs	
Cat. No. Prefix	**Ampere Rating**	**Lb**	**Kg**	**Qty.**	**Size**	**Qty.**	**Size**
PS[1]	200	71	32	1	#6-300 kcmil	1	#10-2/0

1 200 A “PS” units for use on one side of vertically mounted busway only. To determine proper mounting side for this unit, position busway “TOP” marking to the right (same side as unit operating handle) and the neutral bus bar to the left as shown in top view of drawing. Refer to “PQ” units for use on horizontally mounted busway.

These units are available with the IP54 option. Contact Schneider Electric for IP54 enclosure dimensions.

© 1986–2017 Schneider Electric
All Rights Reserved

Fusible Switch Plug-In Unit—400 A and 600 A (Type “PBQ”)

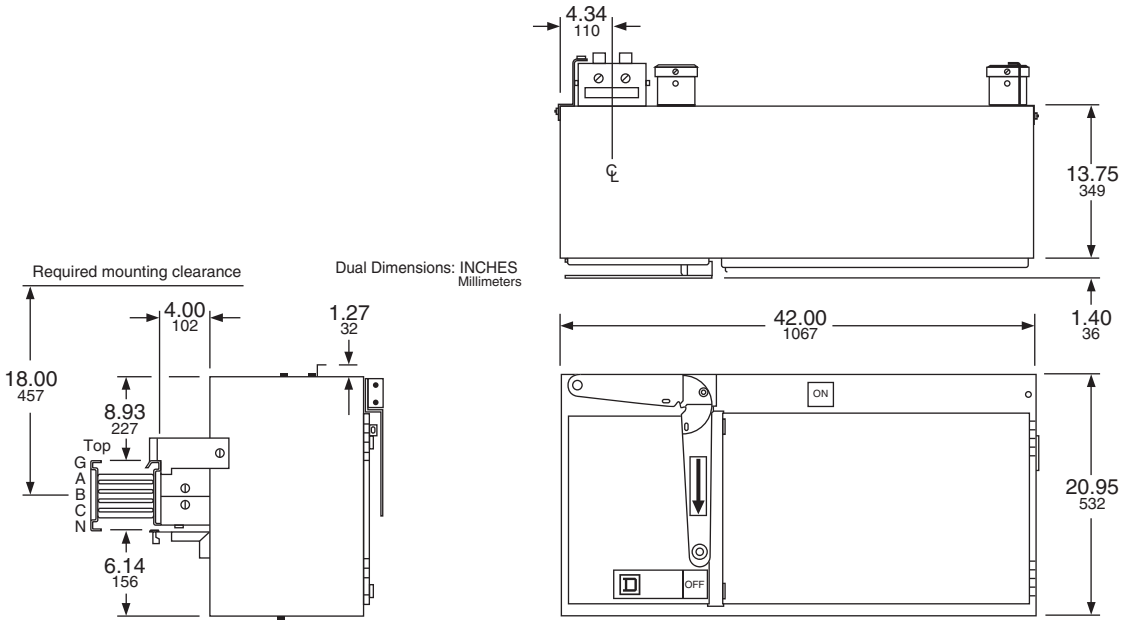

Figure 117: Fusible Switch Plug-In Unit—400 A and 600 A (Type “PBQ”)

Table 72: Fusible Switch Plug-In Unit—400 A and 600 A (Type “PBQ”) Specifications

Fusible Switch		Weight (Approx.)		Lugs Per Phase and Neutral		Ground Lugs	
Cat. No. Prefix	**Ampere Rating**	**Lb**	**Kg**	**Qty.**	**Size**	**Qty.**	**Size**
PBQ[1]	400 and 600	215	98	2	1/0-600 kcmil	1	#6-300 kcmil

NOTE: For vertical riser applications for I-Line II busway, order auxiliary kit catalog number PBQ-4060-RMK. This kit is not suitable for installation on I-Line™ busway from 225–600 A in a vertical riser mounting.

[1] 400 A and 600 A “PBQ” units plug into one opening, but require space equal to two plug-in openings.

These units are available with the IP54 option. Contact Schneider Electric for IP54 enclosure dimensions.

© 1986–2017 Schneider Electric
All Rights Reserved

Fusible Switch Plug-In Unit— 400 A (Type “PBQA”)

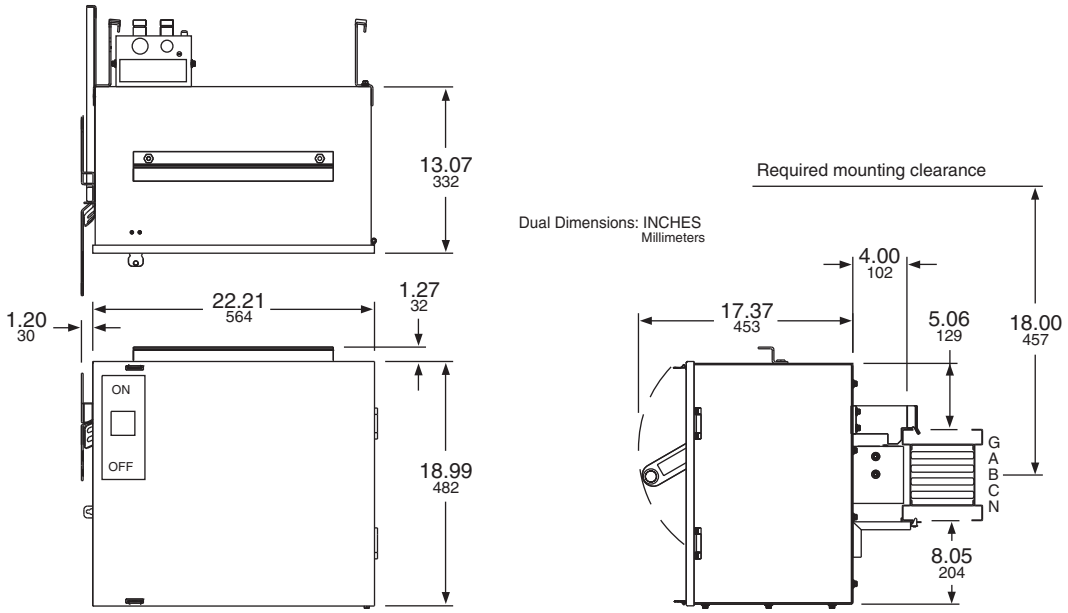

Figure 118: Fusible Switch Plug-In Unit— 400 A (Type “PBQA”)

Table 73: Fusible Switch Plug-In Unit— 400 A (Type “PBQA”) Specifications

Fusible Switch		Weight (Approx.)		Lugs Per Phase and Neutral		Ground Lugs	
Cat. No. Prefix	Ampere Rating	Lb	Kg	Qty.	Size	Qty.	Size
PBQA[1]	400	118	53.5	1	#1-600 kcmil	1	#6-300

[1] PBQA units for use on horizontally mounted busway only.

Lugs are mechanical type.

© 1986–2017 Schneider Electric
All Rights Reserved

Fusible Switch Bolt-On Units—800–1200 A (Type “PTQ”)

NOTE: Bolt-on units can be used only on plug-in busway (800–4000 A—except 800 A copper I-LINE II) with the same number of poles (*e.g.*, do not use 3-pole unit on 3Ø4W busway, or 3Ø4W unit on 3-pole busway).

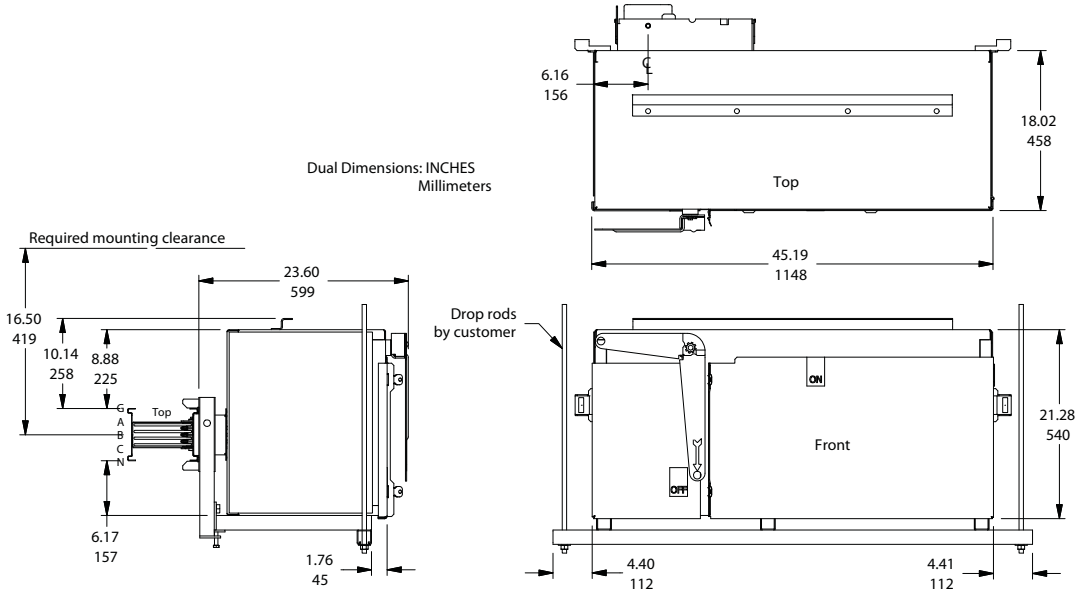

Figure 119: Fusible Switch Bolt-On Units (Horizontally Mounted)

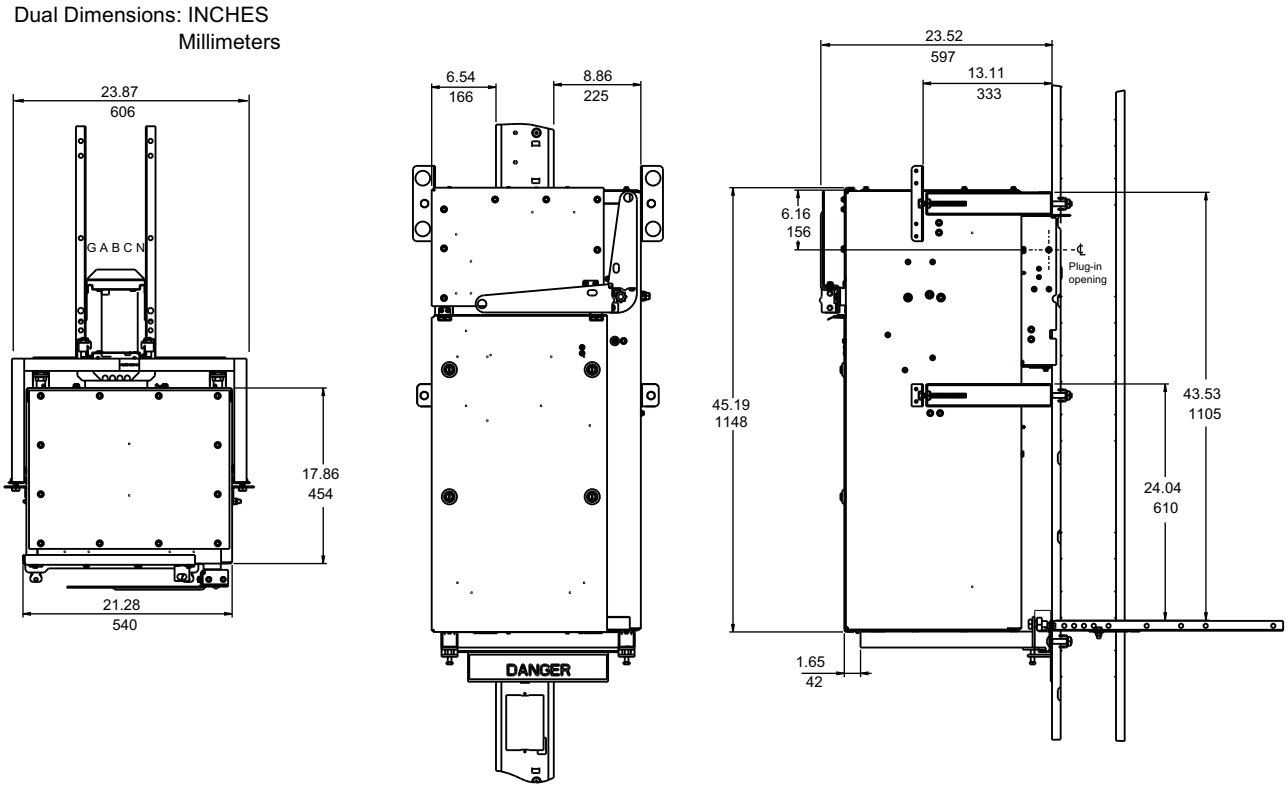

Figure 120: Fusible Switch Bolt-On Units (Vertically Mounted)

© 1986–2017 Schneider Electric
All Rights Reserved

Table 74: Fusible Switch Bolt-On Units — 800–1200 A (Type "PTQ") Specifications

Fusible Switch		Weight		Lugs Per Phase and Neutral		Ground Lugs	
Cat. No. Prefix	Ampere Rating	Lb	Kg	Qty.	Size	Qty.	Size
PTQ[1]	800	280.00	127	3	3/0-500	4	#6-300
	1000	310.00	140	4		4	
	1200	310.00	140	4		4	

NOTE: This unit requires a special hanger that is mounting orientation specific. Add "H" on the end of the catalog number for units that will be mounted horizontally, and "V" for units that will be mounted vertically. These mounting frames are NOT interchangeable.

[1] "PTQ" units plug into one opening, but require space equal to two plug-in openings.

These units are available with the IP54 option, using the same enclosure dimensions as shown above.

© 1986–2017 Schneider Electric
All Rights Reserved

Circuit Breaker Plug-In Units—15–250 A

Table 75: Circuit Breaker Plug-In Units—15–250 A Dimensions

Circuit Breaker		A		B		C		D		E		F		G		H	
Cat No. Prefix	Trip Range (Amperes)	IN	mm	IN	mm	IN	mm	IN	mm	IN	mm	IN	mm	IN	mm	IN	mm
PFA, PFH	15–100	13.00	330	8.25	210	6.62	168	8.62	219	1.12	28	1.12	28	2.00	51	10.00	254
PHD, PHG, PHJ, PHL	15–150	20.30	516	8.50	216	8.00	203	9.12	232	1.00	25	1.38	35	2.00	51	11.00	279
PJD, PJG, PJJ, PJL	175–250	20.30	516	8.50	216	8.00	203	9.12	232	1.00	25	1.38	35	2.00	51	11.00	279

Table 76: Circuit Breaker Plug-In Units—15–250 A Specifications

Circuit Breaker		Weight		Lugs Per Phase and Neutral		Ground Lugs	
Cat No. Prefix	Trip Range (Amperes)	Lb	Kg	Qty.	Size	Qty.	Size
PFA, PFH	15–30	28	13	1	#14 - 4	1	#10 - #2
PFA, PFH	35–100	28	13	1	#14 - 1/0	1	#10 - #2
PHD, PHG, PHJ, PHL	15–30	32.00	15	1	#14 - #10	1	#6 - #2/0
PHD, PHG, PHJ, PHL	35–150	32.00	15	1	#8 - #3/0	1	#6 - #2/0
PJD, PJG, PJJ, PJL	175–250	32.00	15	1	#3/0 - 350 kcmil	1	#6 - #2/0

NOTE: H and J units are available with the IP54 option. Contact Schneider Electric for IP54 enclosure dimensions.

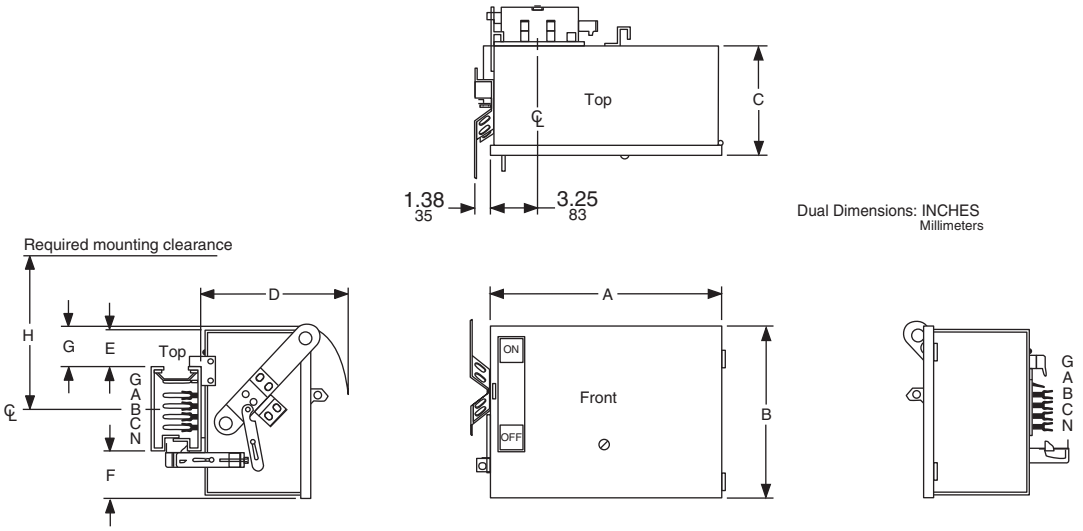

Figure 121: Circuit Breaker Plug-In Units—15–250 A

© 1986–2017 Schneider Electric
All Rights Reserved

Circuit Breaker Plug-In Units—250–600 A

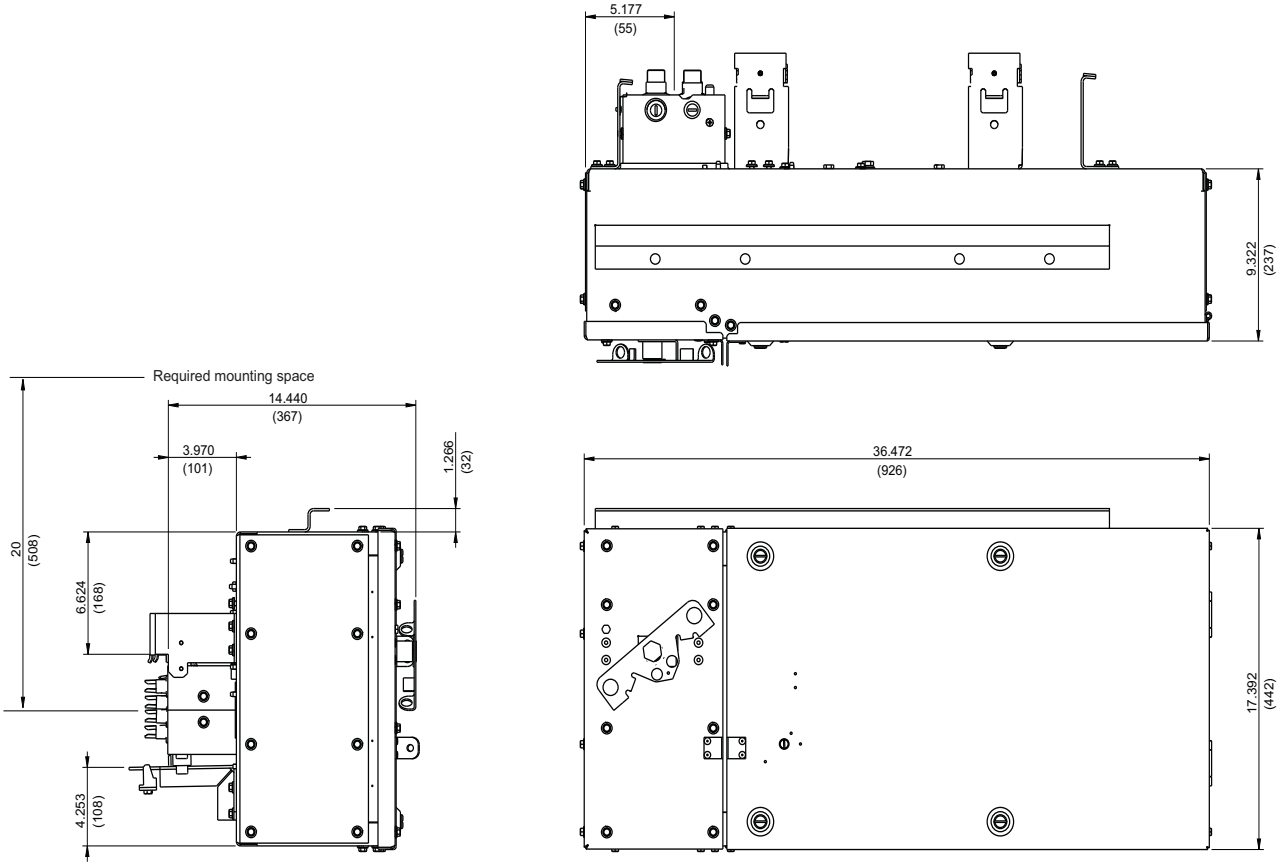

Figure 122: Circuit Breaker Plug-In Units—250–600 A

Table 77: Circuit Breaker Plug-In Units—250–600 A Specifications

Circuit Breaker		Weight (Approx.)		Lugs Per Phase		Ground Lugs		Lugs on Neutral	
Cat. No. Prefix	Trip Range (Amperes)	Lb	Kg	Qty.	Size	Qty.	Size	Qty.	Size
PBLD, PBLG, PBLJ, PBLL, PBLR	250	121	55	1	#2 – 600 kcmil	1	#6 – 300 kcmil	2	1/0 – 600 kcmil
	400–600			2	2/0 – 500 kcmil	1	#6 – 300 kcmil	2	1/0 – 600 kcmil

NOTE: These units plug into one opening, but require space equal to two plug-in openings. They are available with the IP54 option and have the same enclosure dimensions as shown above. For vertical riser applications for I-Line II busway, order auxiliary kit catalog number PBQ-4060-RMK. This kit is not suitable for installation on I-Line™ busway from 225–600 A in a vertical riser mounting.

© 1986–2017 Schneider Electric
All Rights Reserved

Circuit Breaker Plug-In Units with Micrologic™ Electronic Trip Units and Communication

Communication hardware packages are available on Powerpact™ H-, J-, and L-Frame Plug-in Units with Micrologic™ electronic trip units. These communication hardware packages will provide access to monitor circuit breaker data from these plug-in units. Modbus and Ethernet ports are available on the enclosure for integration into any power monitoring and control system. Communication packages are housed in a separate enclosure mounted adjacent to the plug-in units.

NOTE: Communications box is not available as standalone.

Add the appropriate communication system voltage suffix to the end of the associated H-, J-, or L-Frame breaker with Micrologic electronic trip units, for example: PHD36060GNU31X**IFE4**. For the plug-in unit catalog numbering system, see page 99.

Table 78: Communication Suffix

System Voltage	Communication	Communication Type Suffix	System Voltage Suffix
Up to 480 Y/277 V	Ethernet	IFE	4
	Modbus	IFM	
480 V only	Ethernet	IFE	5
	Modbus	IFM	
600 Y/347 V, 600 V	Ethernet	IFE	6
	Modbus	IFM	

H-and J-Frame Circuit Breaker Plug-In Units with Communications Box

Table 79: H-and J-Frame Circuit Breaker Plug-In Units with Communications—60–250 A

Cat. No. Prefix	Catalog No. Suffix[1]	Trip Range (Amperes)	Weight (Approx.)	
			Lb	Kg
PHD, PHG, PHJ, PHL	IFM4 / IFE4	60–150	44	20
PHD, PHG, PHJ, PHL	IFM5 / IFM6 / IFE5 / IFE6	60–150	46	21
PJD, PJG, PJJ, PJL	IFM4 / IFE4	250	44	20
PJD, PJG, PJJ, PJL	IFM5 / IFM6 / IFE5 / IFE6	250	46	21

[1] See Table 78.

© 1986–2017 Schneider Electric
All Rights Reserved

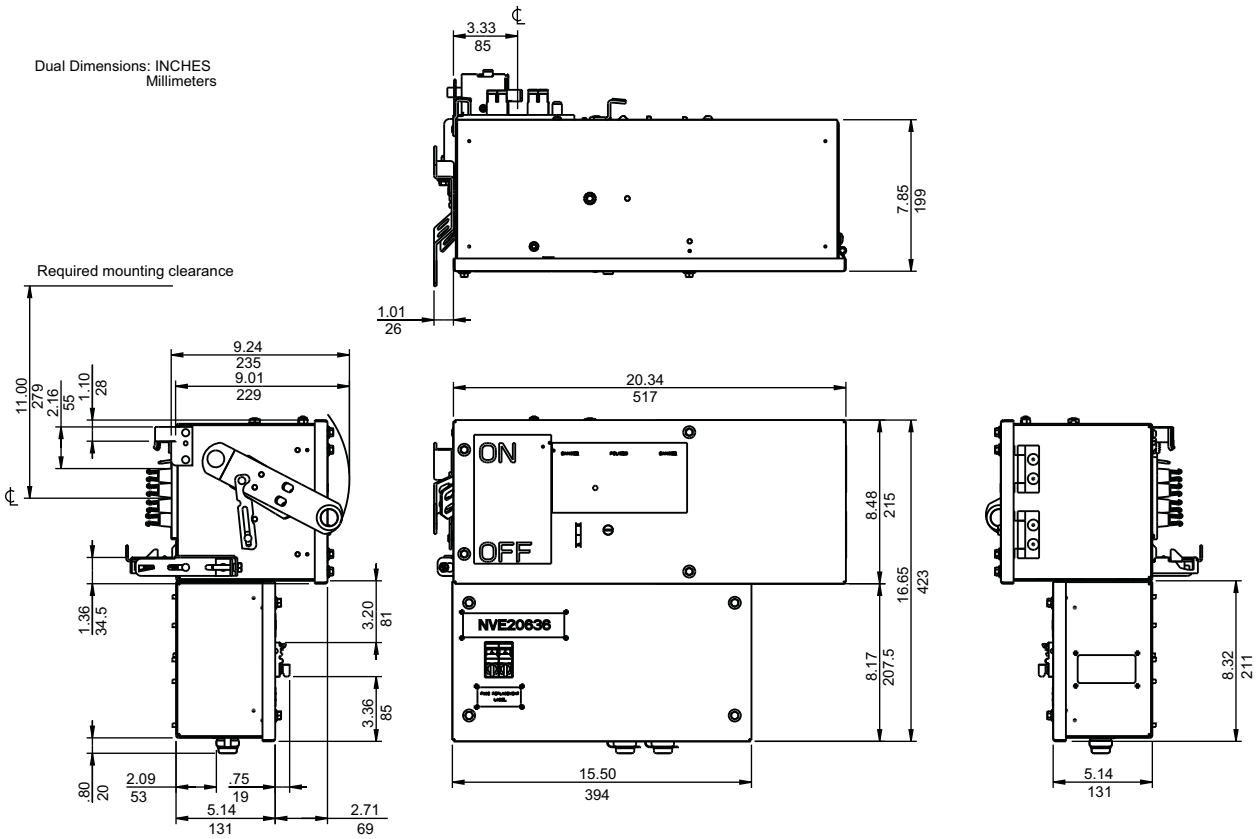

Figure 123: H- and J-Frame Plug-In Unit with Communications Box Dimensions

© 1986–2017 Schneider Electric
All Rights Reserved

L-Frame Circuit Breaker Plug-In Units with Communications Box

Table 80: L-Frame Circuit Breaker Plug-In Units with Communications—250–600 A

Cat. No. Prefix	Catalog No. Suffix[1]	Trip Range (Amperes)	Weight (Approx.)	
			Lb	Kg
PBLD, PBLG, PBLJ, PBLL, PBLR	IFM4 / IFE4	250–600	135	61
PBLD, PBLG, PBLJ, PBLL, PBLR	IFM5 / IFM6 / IFE5 / IFE6	250–600	138	63

[1] See Table 78 on page 115.

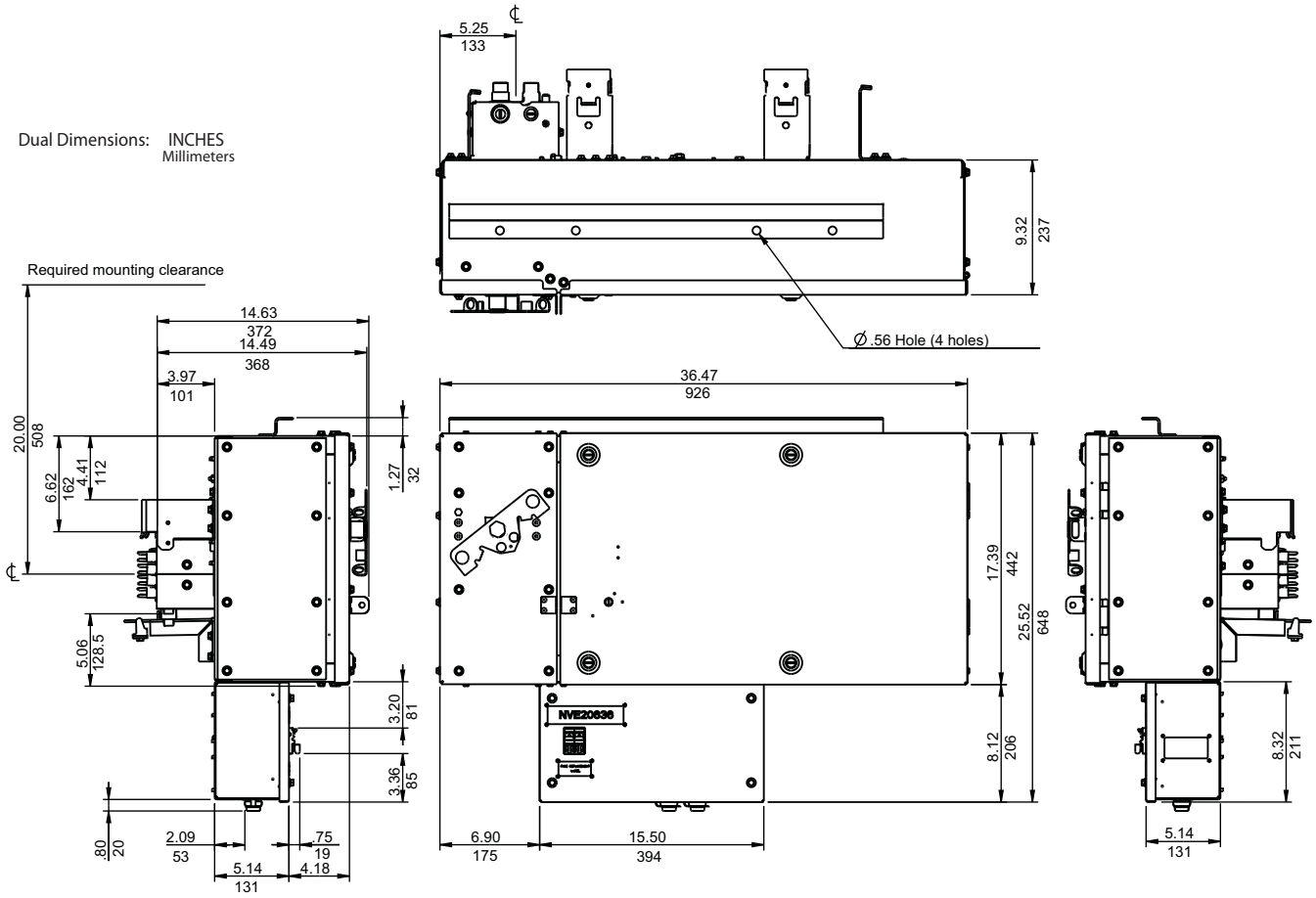

Figure 124: L-Frame Plug-In Unit with Communications Box Dimensions

© 1986–2017 Schneider Electric
All Rights Reserved

Circuit Breaker Bolt-On Units—250–1200 A

NOTE: Bolt-on units to be used only on plug-in busway with the same number of poles. Not for use on 800 A copper busway.

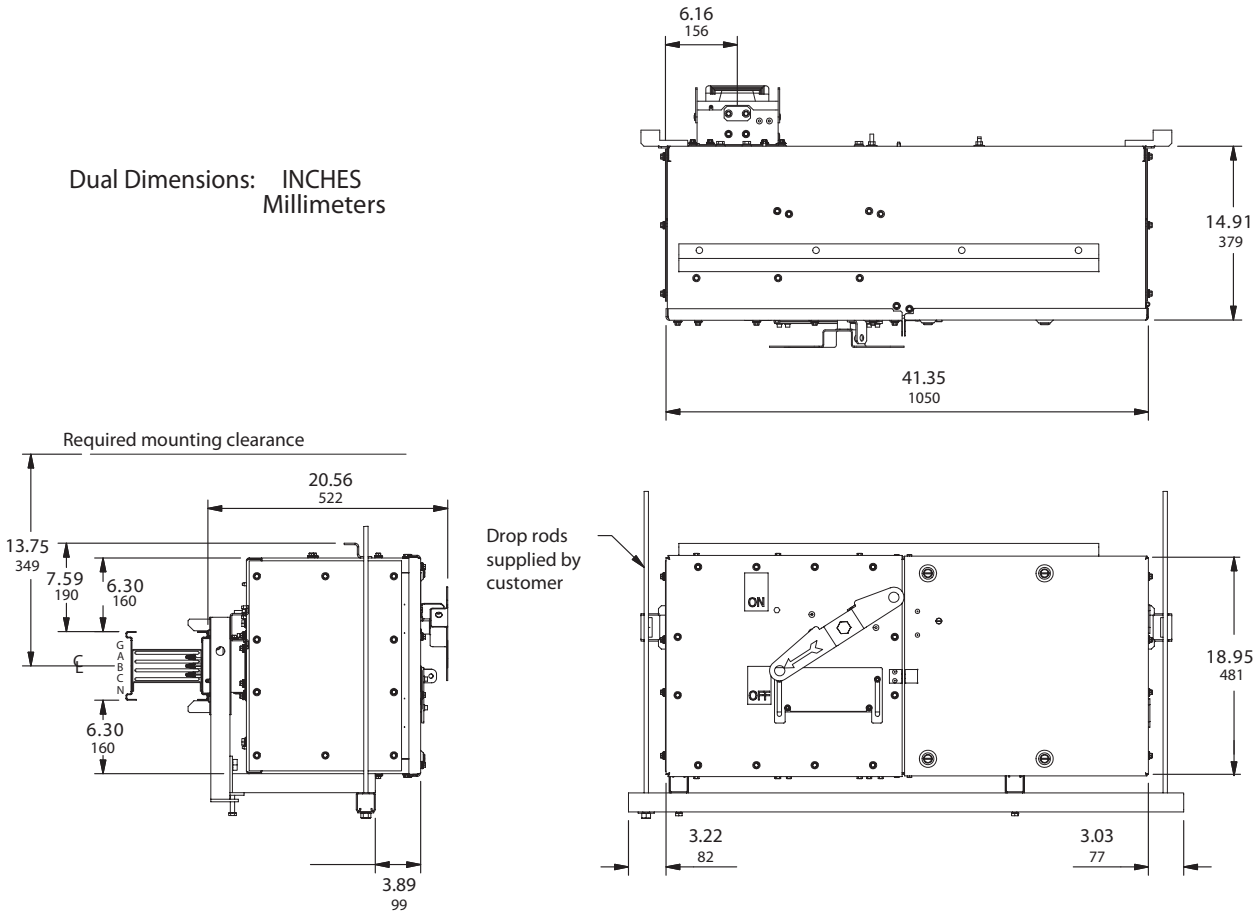

Figure 125: Circuit Breaker Bolt-On Units (Horizontally Mounted)—250–1200 A

© 1986–2017 Schneider Electric
All Rights Reserved

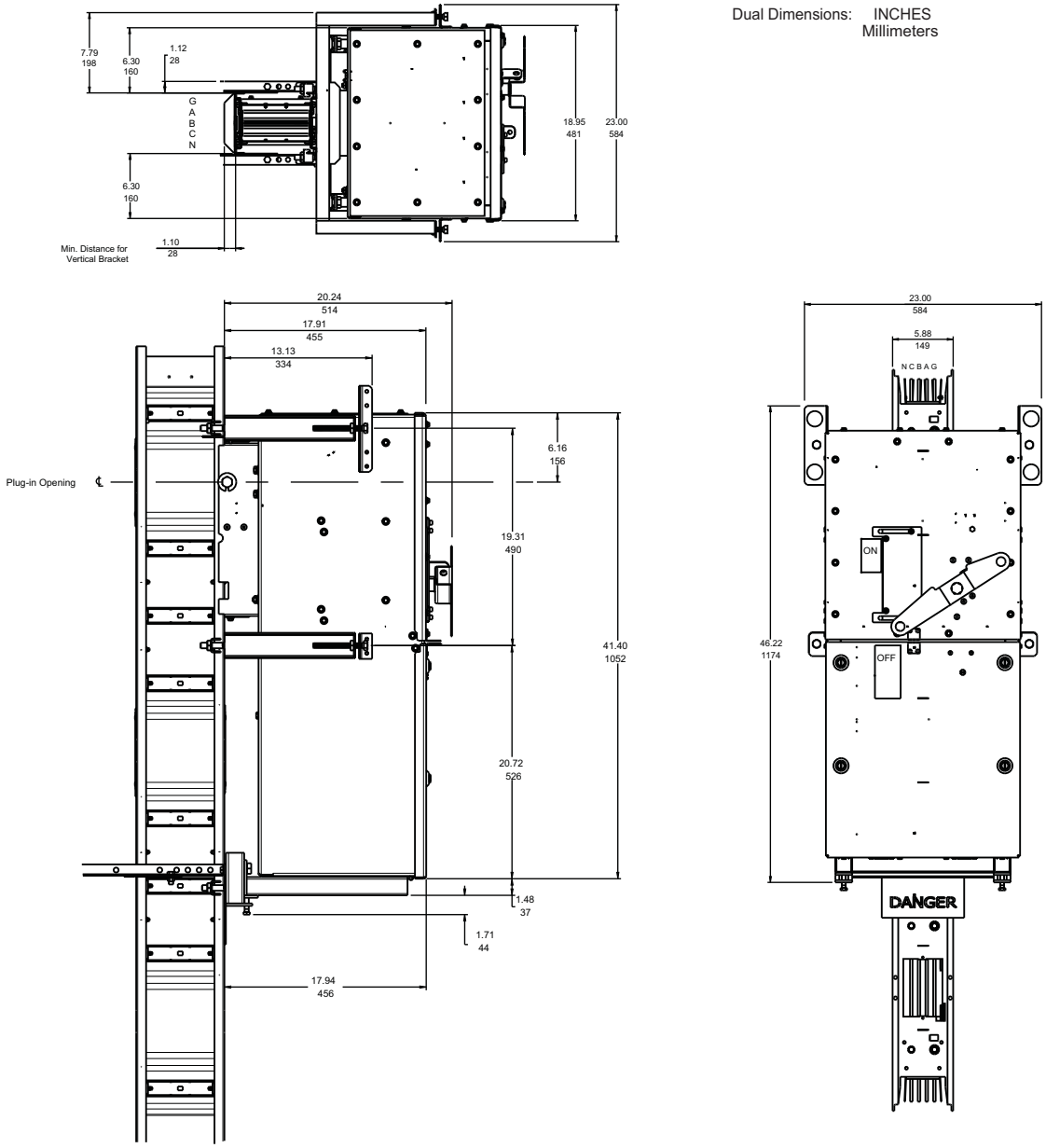

Figure 126: Circuit Breaker Bolt-On Units (Vertically Mounted)—250–1200 A

Table 81: Circuit Breaker Bolt-On Units—250–1200 A Specifications

Circuit Breaker		Weight (Approx.)		Lugs Per Phase and Neutral		Ground Lugs	
Cat. No. Prefix	**Trip Range (Amperes)**	**Lb**	**Kg**	**Qty.**	**Size**	**Qty.**	**Size**
PTMG, PTMJ	300-800	284	92	3	3/0 – 500 kcmil	4	6 – 300 kcmil
PTPG, PTPJ	250-800	284	92	3			
	1000-1200	304	101	4			

NOTE: These units plug into one opening, but require space equal to two plug-in openings.

NOTE: These units are available with the IP54 option and will be the same enclosure dimensions as shown above.

© 1986–2017 Schneider Electric
All Rights Reserved

Circuit Breaker Bolt-On Units—600–1600 A

NOTE: Bolt-on units to be used only on plug-in busway (800–4000 A—except 800 A copper I-Line II) with the same number of poles (for example, do not use 3-pole unit on 3Ø4W busway).

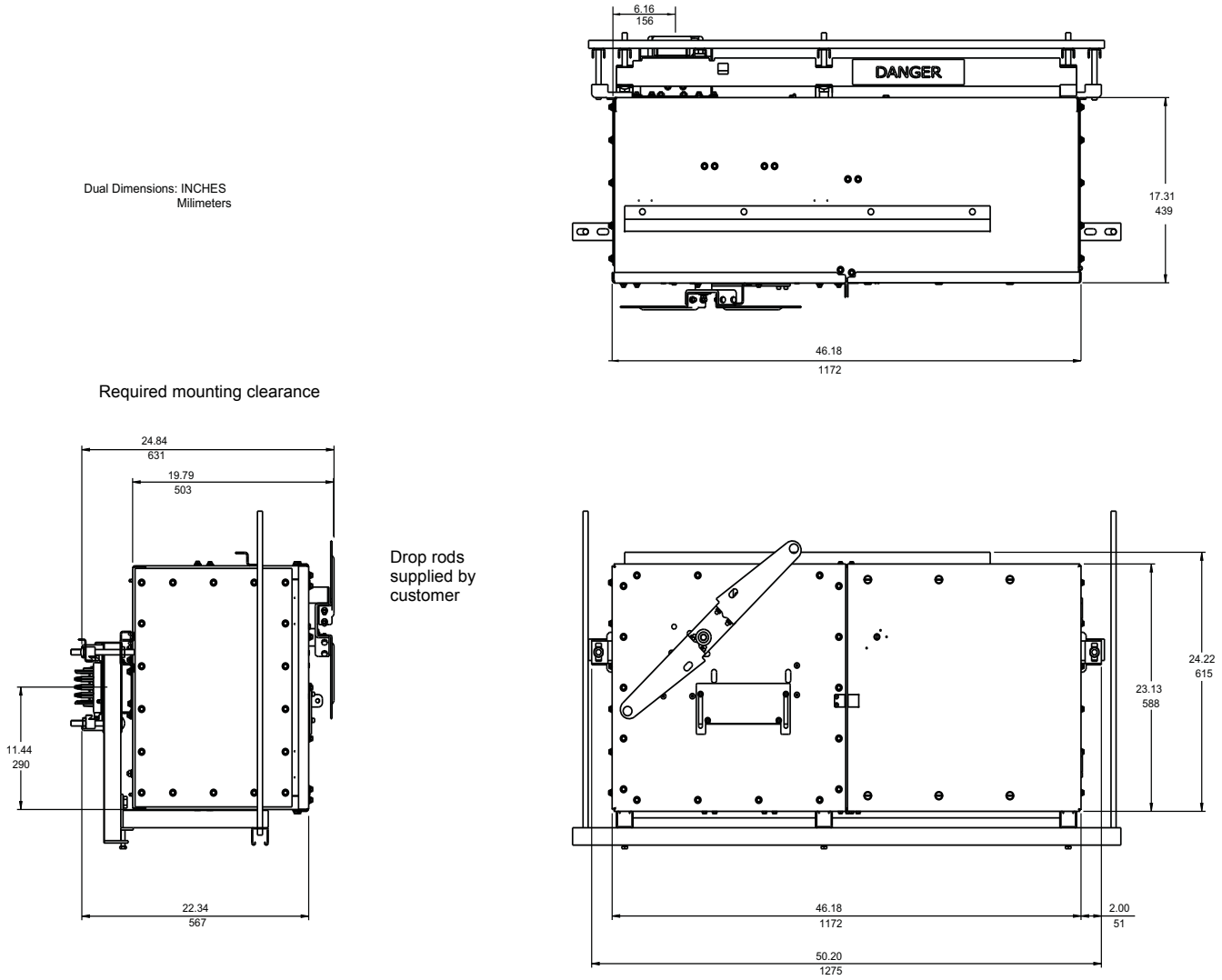

Figure 127: Circuit Breaker Bolt-On Units (Horizontally Mounted)—600–1600 A

© 1986–2017 Schneider Electric
All Rights Reserved

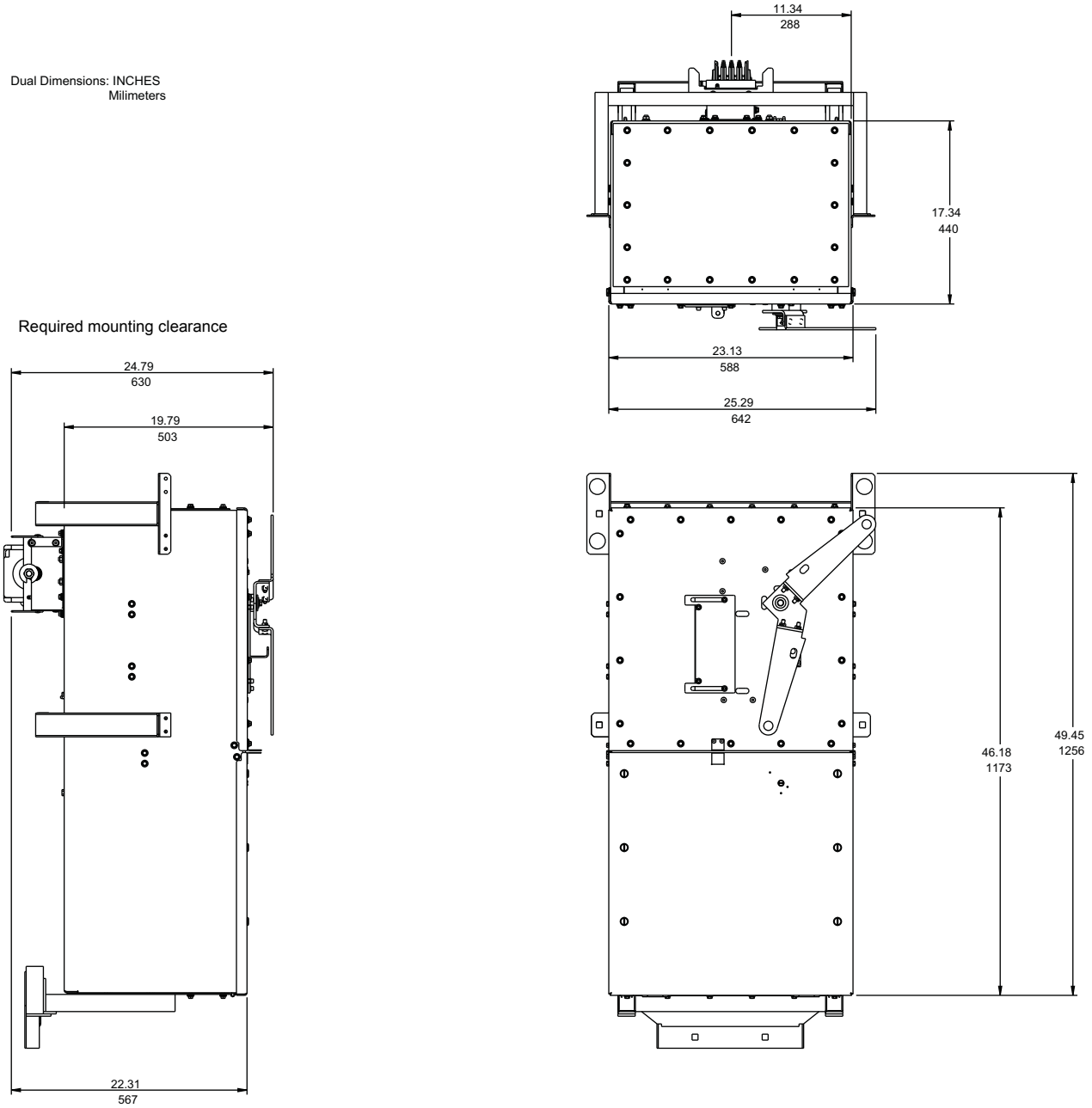

Figure 128: Circuit Breaker Bolt-On Units (Vertically Mounted)—600–1600 A

Table 82: Circuit Breaker Bolt-On Units—600–1600 A Specifications

Circuit Breaker		Weight (Approx.)		Lugs Per Phase and Neutral		Ground Lugs	
Cat. No. Prefix	**Trip Range (Amperes)**	**Lb**	**Kg**	**Qty.**	**Size**	**Qty.**	**Size**
PTRG, PTRJ, PTRL	600–1600	315	143	6	#1– 600 kcmil	6	#6 – 300 kcmil

NOTE: These units plug into one opening, but require space equal to two plug-in openings.

NOTE: These units are available with the IP54 option. Contact Schneider Electric for IP54 enclosure dimensions.

© 1986–2017 Schneider Electric
All Rights Reserved

Surge Protective Devices

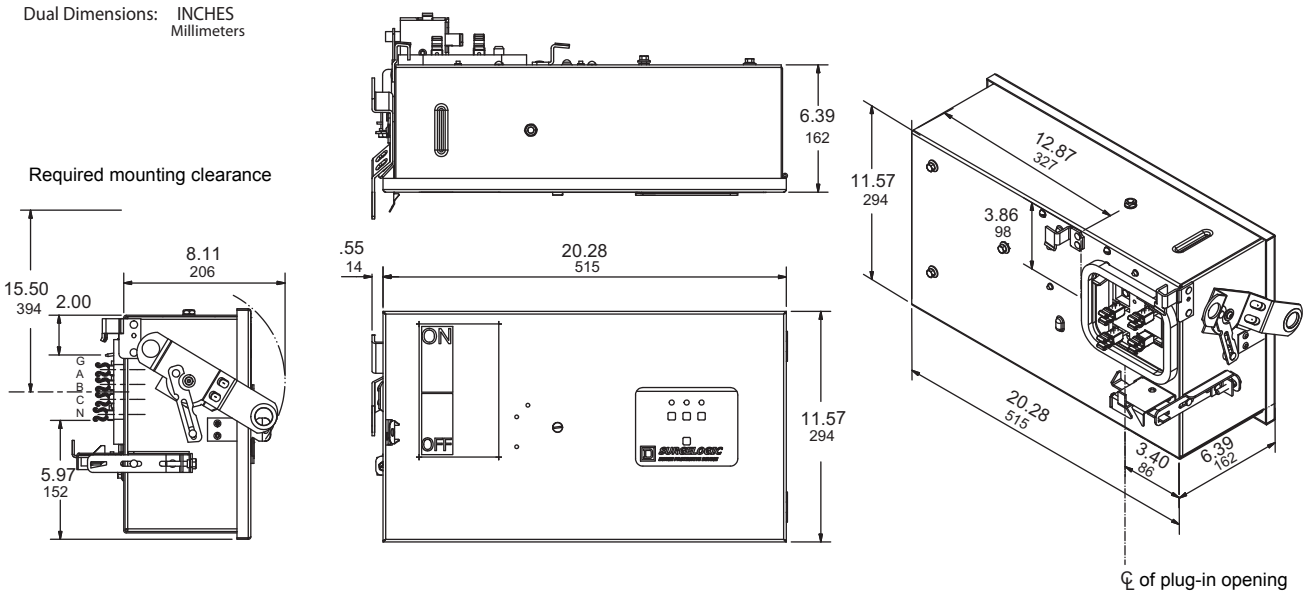

Figure 129: Surge Protective Devices-Dimensions, Required Mounting Clearance

Table 83: Surge Protective Devices—Surge Capacity

160,000 Amperes Per Phase			
Voltage Rating	**Catalog Number**	**Weight**	
		Lb	**Kg**
208Y/120 Vac	PIU2IMA16	34	16
240Y/120 Vac	PIU3IMA16	34	16
480Y/277 Vac	PIU4IMA16	34	16
600Y/347 Vac	PIU8IMA16	34	16
240,000 Amperes Per Phase			
Voltage Rating	**Catalog Number**	**Weight**	
		Lb	**Kg**
208Y/120 Vac	PIU2IMA24	34	16
240Y/120 Vac	PIU3IMA24	34	16
480Y/277 Vac	PIU4IMA24	34	16
600Y/347 Vac	PIU8IMA24	34	16

NOTE: These devices are available with the IP54 option.

© 1986–2017 Schneider Electric
All Rights Reserved

Combination Fusible Switch and Starter / Lighting Contactor / Contactor

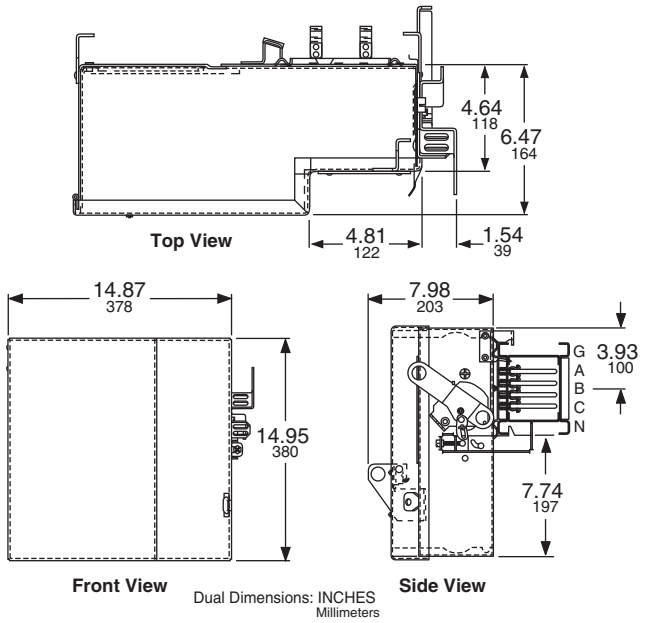

Table 84: Fusible Switch Starters / Lighting Contactors–Ratings and Dimensions

Fusible Switch Starter and Contactor			A		F		H	
Cat. No. Prefix	**Starter or Contactor Size**	**Switch Rating**	**IN**	**mm**	**IN**	**mm**	**IN**	**mm**
PSS, PSC	0 – 1	30-60 A	27.40	696	2.13	54	10.00	254
	2	60 A	29.58	751	3.38	86	10.00	254
	2	100 A	33.42	849	9.38	238	12.00	305

Table 85: Fusible Switch Lighting Contactor

Fusible Switch Lighting Contactor		A		F		H	
Cat. No. Prefix	**Contactor and Switch Rating**	**IN**	**mm**	**IN**	**mm**	**IN**	**mm**
PSL	30 A[1]	29.58	751	3.38	86	10.00	254
	30[2] – 60 – 100 A	33.42	849	9.38	238	12.00	305

[1] 30 A unit with electrically held contactor.

[2] 30 A unit with mechanically held contactor.

© 1986–2017 Schneider Electric
All Rights Reserved

Combination Circuit Breaker and Starter—Contactor

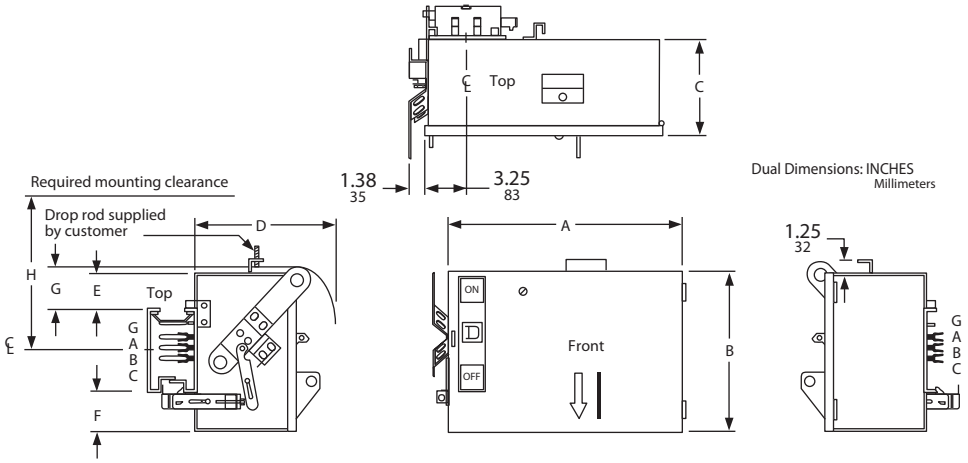

Table 86: Combination Circuit Breaker and Starter—Contactor Specifications

Circuit Breaker and Contactor			A		B		C		D		E		F		G		H	
Cat. No. Prefix	Starter or Contactor Size	Breaker Rating	IN	mm	IN	mm	IN	mm	IN	mm	IN	mm	IN	mm	IN	mm	IN	mm
PBS, PBC	0, 1, 2	15-90 A	20.42	519	9.76	248	6.19	157	8.50	216	1.00	25	2.75	70	1.63	41	10.00	254

© 1986–2017 Schneider Electric
All Rights Reserved

Ground Detector and Neutralizer

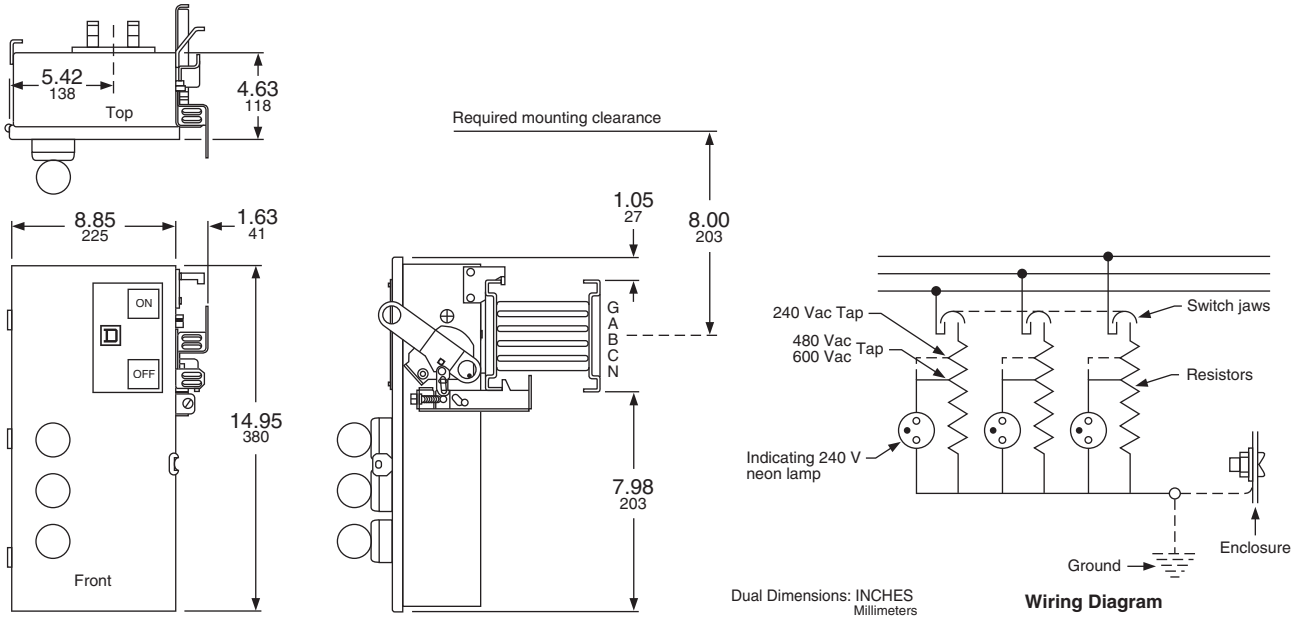

NOTE: The ground detector and neutralizer plug-in unit consists of a disconnect, a high resistance connection from each phase-to-ground, and neon indicating lights wired in parallel with the resistors. The resistors provide a discharge path for high transient voltages that can be impressed temporarily on the busway system.

The neon indicating lights provide visual indication of ground connections in a 3Ø3W ungrounded system. Operation of the lights is such that under normal conditions all three lights glow dimly under half voltage. If one phase goes to ground, the indicating light associated with that phase goes out while the other two assume full brilliance under full voltage conditions.

Table 87: Ground Detector and Neutralizer—Catalog Numbers and Approximate Weights

Voltage Rating	Catalog Number	Weight	
		Lb	Kg
240 Vac	PGD-3200G	16.0	35
600 Vac	PGD-3600G	16.0	35

© 1986–2017 Schneider Electric
All Rights Reserved

Section 10—Powerbus™ Plug-in Busway

Product Descriptions

Powerbus™ plug-in busway, manufactured by Schneider Electric, was designed specifically to address the low power distribution needs of industrial and commercial customers. Schneider Electric has applied over 50 years of experience in the busway business to develop a reliable low power distribution system that will reduce installation time and cost, as well as provide the flexibility to make future modifications quickly and easily to processes and facilities.

Powerbus Busway System

General Information

Powerbus construction consists of a lightweight electrical grade, all-aluminum housing with silver-plated copper conductor bars for maximum electrical efficiency. The total product offering includes straight sections, fittings, accessories, and plug-in units for a total installation. The busway is available in 400 A, 225 A, and 100 A for system voltages to 600 V. The standard offer includes a durable black powder coat paint finish.

Straight sections of busway are offered in 4 ft / 48 in. (1.2 m / 1200 mm) and 10 ft / 120 in. (3 m / 3000 m) lengths. Each opening is rated IP2X against solid object ingress (International Standards IP Protection Classification). Fittings include left and right elbows, tap boxes, and crosses, with accessory items such as hangers, end closures, and wall flanges completing the basic system. The enhanced plug-in offer provides 20 plug-in openings per 10 ft / 120 in. (3 m / 3048 mm) of straight length and 6 plug-in openings per 4 ft / 48 in. (1.2 m / 1200 mm) of straight length. Plug-in units are available in a wide variety of ready-to-assemble and factory-assembled devices.

The standard level of protection for the busway straight lengths and fittings is to International Standards IP Protection Classification IP40. For IP54 protection rating and seismic application, contact your local Schneider Electric representative.

Busbar Configuration

Powerbus can be supplied with up to five (5) conductor bars to accommodate a wide range of electrical systems. This includes 200% neutral capability to address applications where harmonic currents are a concern. Powerbus can also provide an isolated ground for electrical systems that require a “clean” ground, in addition to the standard 50% integral ground.

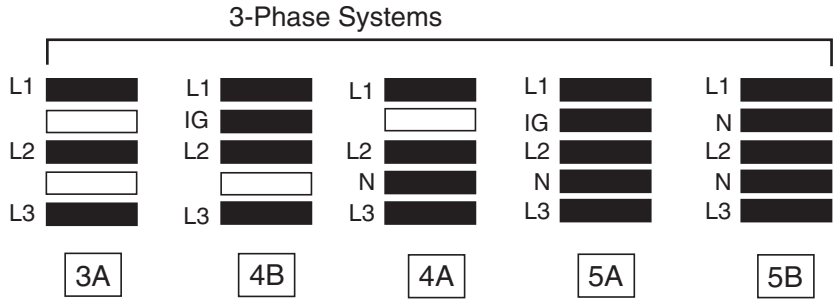

NOTE: Single-phase and DC systems are also available. Contact your local Schneider Electric representative.

© 1986–2017 Schneider Electric
All Rights Reserved

Maintenance-Free Joint

For maximum reliability, the Powerbus joint employs a high-pressure, spring-type, copper connection that requires no maintenance after installation.

Physical and Electrical Data

Table 88: Short-Circuit Rating

Product	Short-Circuit Current Rating KA, RMS Symmetrical		Impedance[1] Line-to-Neutral (milliohms / 100 ft)			DC Resistance [1] of Aluminum Housing Ground (milliohms / 100 ft)
	UL 3-Cycle Test	Series-Connected with Fuse[2]	R	X60 Hz	X50 Hz	
100 A	14 kA	200 kA	15.34	7.59	6.32	1.25
225 A	22 kA	200 kA	6.40	4.00	3.33	1.15
400 A	35 kA	200 kA	3.74	2.19	1.83	0.54

1 Busway impedance and housing ground resistance are at 176 °F (80 °C) operating temperature

2 Busway connected in series with a Class J or Class T fuse

Table 89: Short Circuit Ratings: RMS Symmetrical (Series Rated with an Upstream Circuit Breaker)[1]

Voltage, VAC	Capacity	Breaker Type[2]	RMS SYM Amps
240	100 A	HG or JG	65,000
	225 A	HG or JG	
	400 A	HG, JG, or LG	
480	100 A	HJ or JJ	65,000
	225 A	HJ or JJ	
	400 A	HJ, JJ, or LJ	
600	100 A	HL or JL	50,000
	225 A	HL or JL	
	400 A	HL, JL, or LL	

1 Interrupt rating of the busway system is limited to the lowest rated plug-in unit installed on the bus unless the plug-in unit carries a series rating with the main breaker used or unless a short circuit study has been completed and shows otherwise.

2 See Powerbus Plug-in Units in Table 90 for available equipment with series ratings with these breakers.

© 1986–2017 Schneider Electric
All Rights Reserved

A series rating of the busway system may be achieved when the equipment listed in Table 90 is used with the indicated breaker at the voltage listed.

When protected by the indicated circuit breaker, the following Powerbus products listed in Table 90 are rated for use on a circuit capable of delivering not more than the RMS symmetrical amperes at the voltage shown.

Table 90: Powerbus Plug-In Unit Short Circuit Series Ratings[1]

Catalog Prefix	Voltage	Short Circuit Rating (RMS SYM. AMPS) with no receptacle or drop cord	Short Circuit Rating (RMS SYM. AMPS) with receptacle or drop cord	Main Breaker
PBPFA	600	50,000	14,000	HL, JL, or LL
	480	65,000	18,000	HJ, JJ, or LI
	240	65,000	25,000	HG, JG, or LG
	120	65,000	25,000	HG, JG, or LG
PBPQO	240	65,000	10,000	HG or JG
PBPQOR		65,000	10,000	HG or JG
PBPQOD		65,000	10,000	HG or JG
PBPQHD		65,000	10,000	HG, JG, or LG
PBPEDU	120	65,000	10,000	HG, JG, or LG
	240	65,000	10,000	HG, JG, or LG
	480	65,000	10,000	HJ, JJ, or LI
PBPEGU	120	65,000	10,000	HG, JG, or LG
	240	65,000	10,000	HG, JG, or LG
	480	65,000	10,000	HJ, JJ, or LI

[1] The series rating information in this table is taken from the UL Yellowbook information for breakers used in the plug-in units listed under Catalog Prefix.

Table 91: Voltage Drop

Product	Voltage Drop (60 Hz @ Rated Load) (Average Phase Line-to-Line Voltage Drop in Volts / 100 ft for Varying Power Factors)					
	100%	90%	80%	70%	60%	50%
100 A	2.657	2.964	2.914	2.799	2.646	2.467
225 A	2.494	2.923	2.929	2.858	2.742	2.596
400 A	2.590	2.992	2.984	2.898	2.770	2.610

NOTES:

1. Values shown are based on single concentrated load at the end of a busway run. For distributed loading, divide the values shown by two (2).
2. For balanced 3-phase line-to-line voltage drop of 4-wire busway, use values from the table above.
3. For balanced 3-phase line-to-neutral voltage drop, multiply values by 0.577.
4. For single-phase voltage drop, multiply values by 1.15.
5. For other than rated current, multiply values by the ratio of: Actual Current ÷ Rated Current
6. For total voltage drop, multiply values by the ratio of: Actual Length ÷ 100 ft
7. Voltage drop calculations for 50 Hz can be made by substituting the appropriate value from Table 1. For other frequency values, contact Schneider Electric at 1-888-778-2733.

© 1986–2017 Schneider Electric
All Rights Reserved

Table 92: Physical Data

Product	Weights (Based on Busbar Configuration)					Busbar Size
	3 bar	4 bar		5 bar		(The same bar size is used for all configurations.)
	3A	4B	4A	5A	5B	
100 A	2.9 lbs/ft (4.32 kg/m)	3.2 lbs/ft (4.76 kg/m)		3.4 lbs/ft (5.06 kg/m)		0.125 x 0.50 inches (3.18 x 12.70 mm)
225 A	4.5 lbs/ft (6.70 kg/m)	5.1 lbs/ft (7.59 kg/m)		5.8 lbs/ft (8.63 kg/m)		0.125 x 1.38 inches (3.18 x 35.05 mm)
400 A	6.9 lbs/ft (10.27 kg/m)	8.0 lbs/ft (11.91 kg/m)		9.0 lbs/ft (13.39 kg/m)		0.125 x 2.25 inches (3.18 x 57.15 mm)

Catalog Numbering System

Table 93: Busway Catalog Numbering System

PB	CE	4A	225A	ST	120	Housing Color
		Busbar Configuration	Amperage Rating	Type of Device	Length	
PB = Powerbus	CE = Copper Plug-In Enhanced (20 openings per 10 ft / 120 in. (3 m / 3048 mm) CF = Copper Fitting	Refer to Figure 130.	100 A= 100 A 225 A= 225 A 400 A = 400 A All rated to 600 V max	ST = Straight Length	120 = 10 ft 048 = 4 ft	B = Black[1]
				LL = Elbow Left		
				LR = Elbow Right		
				CR = Cross		
				TB = Tap Box / Power Feed Unit		

[1] The 100 A busway and 225 A busway are also available in the natural aluminum color.

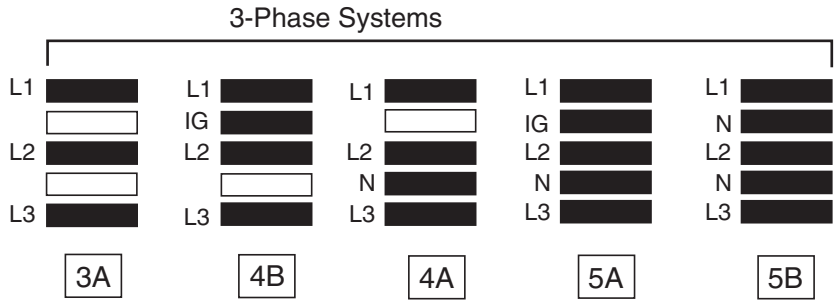

Figure 130: Busbar Configuration

© 1986–2017 Schneider Electric
All Rights Reserved

Dimensions—Straight Lengths, Fittings, and Accessories

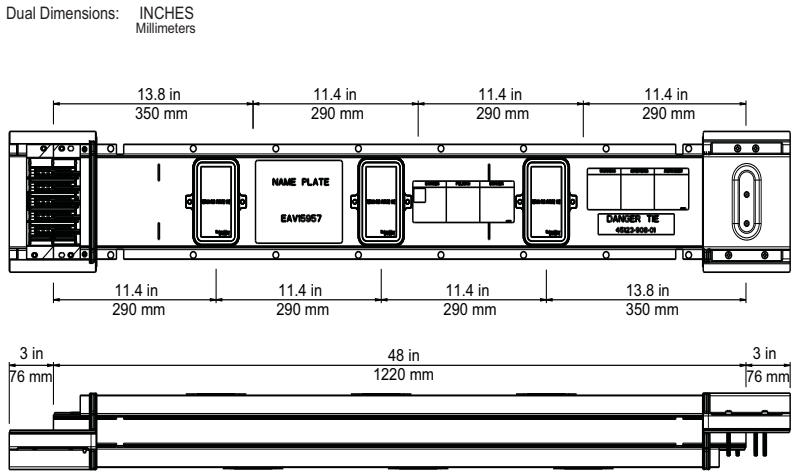

Catalog Numbers: PBCE[‡]400AST048B, PBCE[‡]225AST048B, PBCE[‡]100AST048B

Figure 131: Four-Foot Straight Lengths—Enhanced Plug-In Offer

‡ To complete the catalog number, insert the configuration type from Figure 130 on page 129.

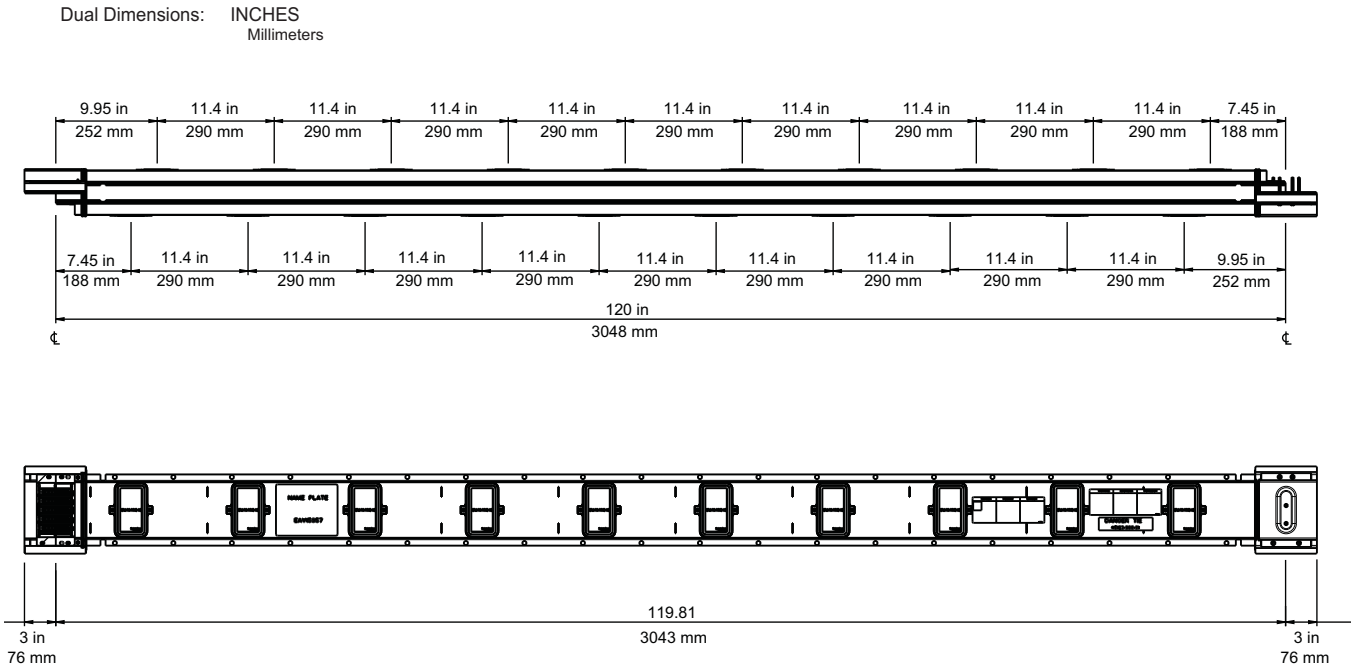

Catalog numbers are PBCE[‡]400AST120B, PBCE[‡]225AST120B, and PBCE[‡]100AST120B

Figure 132: Ten-Foot Straight Lengths—Enhanced Plug-In Offer

‡ To complete the catalog number, insert the configuration type from Figure 130 on page 129.

© 1986–2017 Schneider Electric
All Rights Reserved

Joint Detail

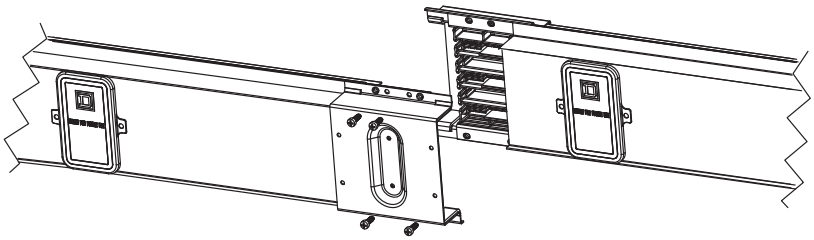

Cross Sections

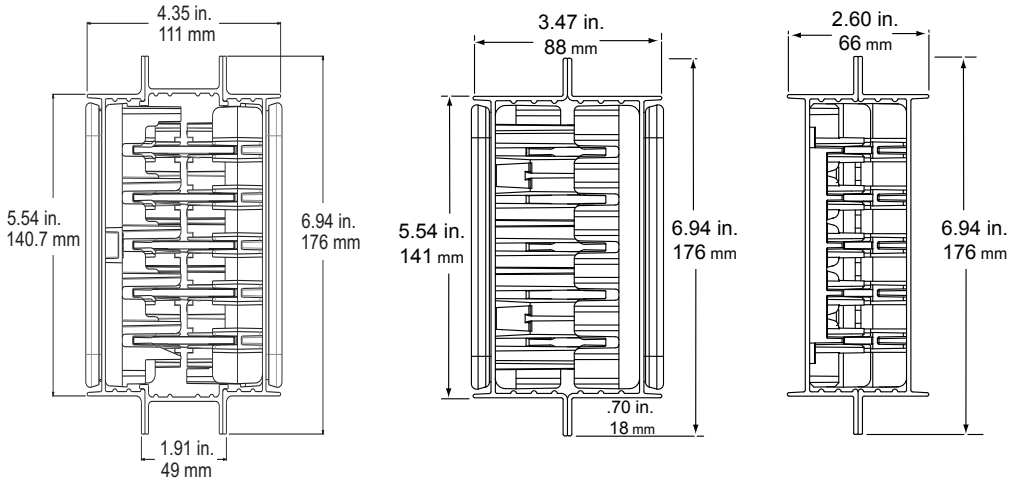

400 A **225 A** **100 A**

© 1986–2017 Schneider Electric
All Rights Reserved

Elbow Left

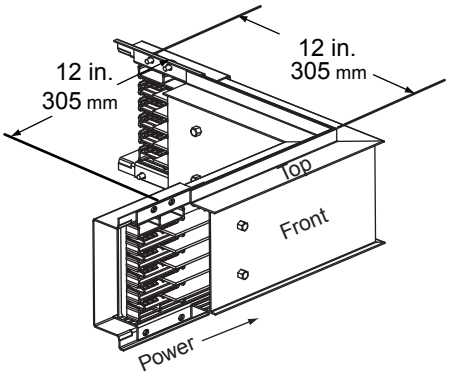

Catalog Number: 400 A = PBCF[‡]400ALLB,
225 A = PBCF[‡]225ALLB, 100 A = PBCF[‡]100ALLB

Elbow Right

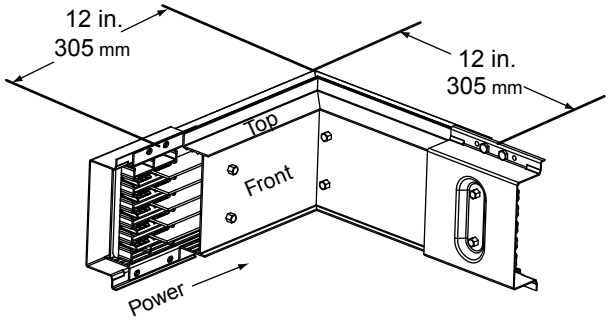

Catalog Number: 400 A = PBCF[‡]400ALRB,
225 A = PBCF[‡]225ALRB, 100 A = PBCF[‡]100ALRB

Cross

NOTE: For applications that require a tee, a cross should be used and the unused end should be capped off.

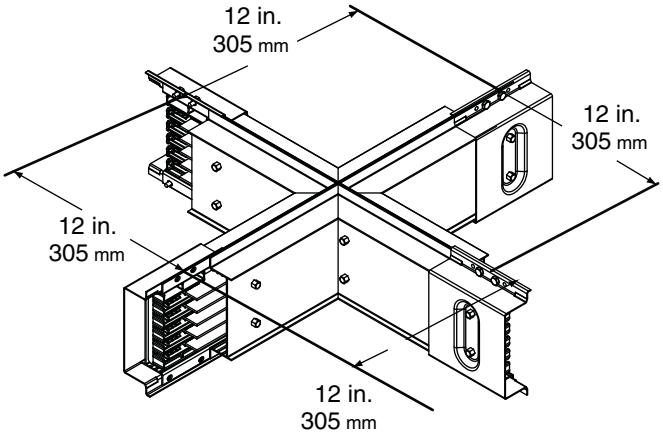

Catalog Number: 400 A = PBCF[‡]400ACRB,
225 A = PBCF[‡]225ACRB, 100 A = PBCF[‡]100ACRB

‡ To complete the catalog number, insert the configuration type from Figure 130 on page 129.

© 1986–2017 Schneider Electric
All Rights Reserved

Tap Box / Power Feed Unit

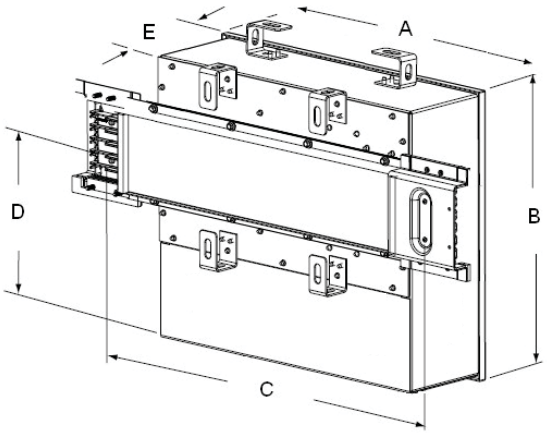

Catalog Number:
400 A = PBCF[‡]400ATBB, 225 A = PBCF[‡]225ATBB,
100 A = PBCF[‡]100ATBB

‡ To complete the catalog number, insert the configuration type from Figure 130 on page 129.

Table 94: Tap Box/Power Feed Unit: Specifications

Product	Lugs per Phase and Neutral		Ground Lugs	
	Quantity	Size	Quantity	Size
100 A	1	#6 - 300 kcmil	1	#10 - 2/0
225 A	1	#6 - 300 kcmil	1	#10 - 2/0
400 A	2	#1 - 600 kcmil	2	#10 - 2/0

Table 95: Tap Box/Power Feed Unit: Dimensions

Product	Weight	A		B		C		D		E	
		IN	mm	IN	mm	IN	mm	IN	mm	IN	mm
100 A	50 lbs	16.6	422	14.5	368	24	762	9.5[1]	241	6.5	165
225 A	65 lbs	31	787	14.5	368	38	965	6.5	165	8	178
400 A	95 lbs	35.5	902	14.5	368	43	1092	6.5	165	8	178

[1] For 100 A only, could be the dimension of the enclosure above or below the busway depending on preference.

© 1986–2017 Schneider Electric
All Rights Reserved

Tap Box / Power Feed Unit with Metering and Communication

The Powerbus™ tap box is available with an optional Powerlogic™ PM5350 meter and gateway. The power meter provides an integrated display and offers all the power and energy measurement capabilities required to monitor the busway run in a single 3.8 x 3.8 in. (96 x 96 mm) unit. The meter is easy to operate with intuitive navigation and self-guided menus. The gateway is an integrated, web-based gateway-server that provides the ability to remotely monitor the meter through an Ethernet connection. An Ethernet port is available on the enclosure for integration into any power monitoring and control system.

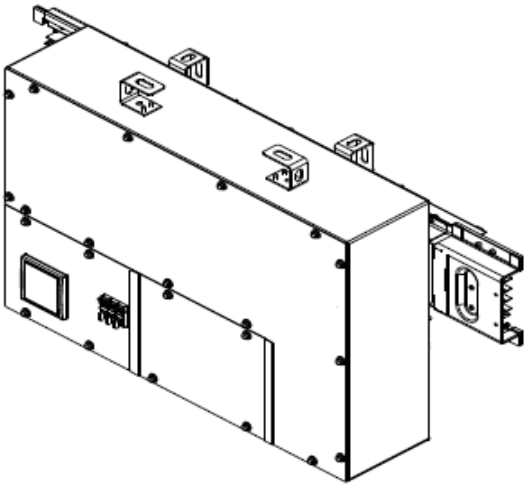

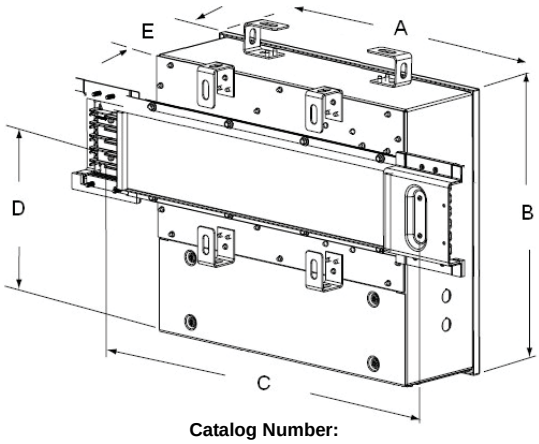

Catalog Number:
400 A = PBCF[‡]400ATBM( )B, 225 A = PBCF[‡]225ATBM( )B,
Top Cable Access: 100 A = PBCF[‡]100ATBM( )LB,
Bottom Cable Access: 100 A = PBCF[‡]100ATBM( )UB

‡ To complete the catalog number, insert the configuration type from Figure 135 on page 145.

The PM5350 meter will be tested at the factory before shipment, so the catalog suffix will vary based on the system voltage. Replace the "( )" in the catalog numbers shown above with the meter suffix number in Table 98 that corresponds to the system voltage of the busway.

Table 96: Tap Box/Power Feed Unit with Metering and Communications: Specifications

Product	Lugs per Phase and Neutral		Ground Lugs	
	Quantity	Size	Quantity	Size
100 A	1	#6 - 300 kcmil	1	#10 - 2/0
225 A	1	#6 - 300 kcmil	1	#10 - 2/0
400 A	2	#1 - 600 kcmil	2	#10 - 2/0

Table 97: Tap Box/Power Feed Unit with Metering and Communications: Dimensions

Product	Weight	A		B		C		D		E	
		IN	mm	IN	mm	IN	mm	IN	mm	IN	mm
100 A	70 lbs	23.5	597	21	533	30	762	13	330	8	178
225 A	90 lbs	31	787	21	533	38	965	14.6	371	8	178
400 A	120 lbs	35.5	902	21	533	43	1092	14.6	371	8	178

Table 98: Meter Suffix

Meter Suffix	System Voltage
1	208Y/120 V 3Ø4W
2	240 V 3Ø3W
4	415/240V 3Ø4W
5	480Y/277V 3Ø4W

NOTE: Contact your local Schneider Electric representative for additional system voltages.

© 1986–2017 Schneider Electric
All Rights Reserved

End Closure

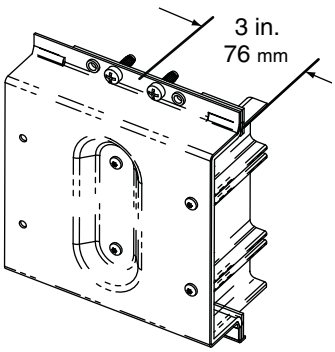

Catalog Number:
400 A = PB400AEC
225 A = PB225AEC
100 A = PB100AEC

Wall Flange

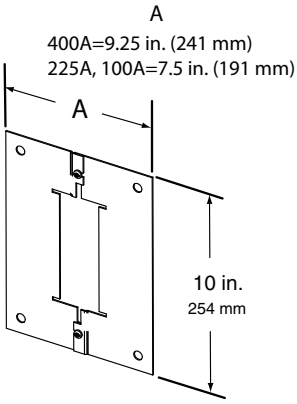

Catalog Number:
400 A = PB400WF
225 A = PB225WF
100 A = PB100WF

Standard Hanger■

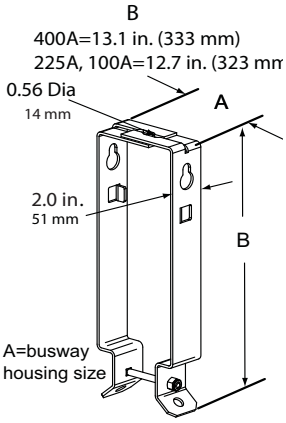

Catalog Number:
400 A = PB400FH
225 A = PB225FH
100 A = PB100FH

Support Clamp

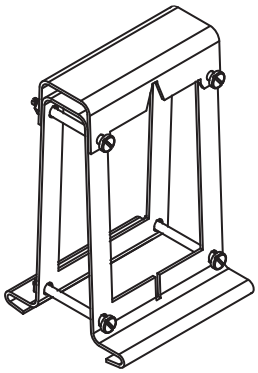

Catalog Number:
PB225SC_
(Suitable for 225 A and 100 A busway. Insert 4 or 6 for fastening clamp to 4-inch or 6-inch I-Beam)

Side-Mount Hanger■

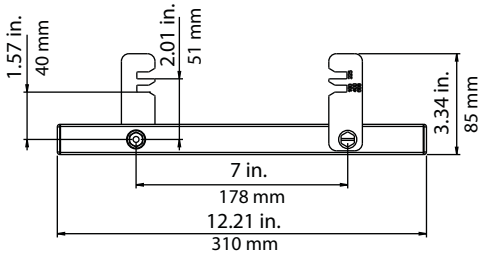

Catalog Number:
400 A = PB400HFW
225 A = PB225HFW
100 A = PB100HFW

Vertical Sway Brace■

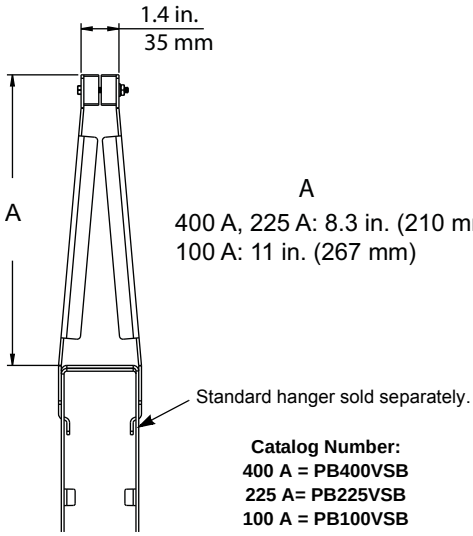

Catalog Number:
400 A = PB400VSB
225 A= PB225VSB
100 A = PB100VSB

■ Maximum hanger spacing is 5 ft (1.5 m). Nuts and drop rods provided by customer.

NetShelter™ IT Rack-Mounting Brackets

Bracket Type	Catalog Number
PB Busway Rack Mounting Bracket, Single Run	PBRMKS
PB Busway Rack Mounting Bracket, Double Run	PBRMKD
PB Busway Rack Mounting Sway Braces	PBRMSB
PB Busway Rack Mounting Drop-in Trough and Partition Brackets	PBRMDB
PB Busway Rack Mounting Skirt, 11.8 in. (300 mm) wide	PBRMSKT300
PB Busway Rack Mounting Skirt, 23.6 in. (600 mm) wide	PBRMSKT600
PB Busway Rack Mounting Skirt, 29.5 in. (750 mm) wide	PBRMSKT750
PB Busway Rack Mount Extra Hardware	PBRMHW

NOTE: The Busway Rack Mounting Kits are compatible with 100 A, 225 A, and 400 A Busway solutions.

© 1986–2017 Schneider Electric
All Rights Reserved

Powerbus Plug-In Units

General Information

Powerbus plug-in units provide a safe, reliable, and easy-to-use method for tapping power off the busway exactly where it is needed. FA units are rated for a maximum of 100 A / 600 V, EDU/EGU units are rated for a maximum of 480Y / 277 V, and QO/QOR/QOU units are rated for a maximum of 100 A / 240 V. All units are protected to NEMA 1. The EDU/EGU units have optional metering capabilities available. An optional kit can raise the level of protection to IP54 on FA/QO units; the same kit raises a receptacle-type unit (QOR) to IPX3.

Ready-to-Assemble Plug-In Units

These “enclosure only” devices have provisions for field-mounting a variety of FA or QO type circuit breakers and receptacles, if required:

- Tap Box (Plug-In): for cabling power from busway
- FA Plug-In Unit: with provisions to accommodate field-installed FA circuit breakers
- QO Plug-In Unit: with provisions to accommodate field-installed QO circuit breakers
- QOR Plug-In Units: with provisions to accommodate field-installed QO circuit breakers plus receptacles

NOTE: Only three breaker spaces are available for all the units listed above.

Factory-Assembled Plug-In Units

As a convenient option, Schneider Electric will factory install the FA or QO circuit breakers (and receptacles, if desired) into the enclosure and completely wire them so the units are ready for immediate installation onto the busway as soon as they arrive in the field.

EDU/EGU and QOU/QOD plug-in units are factory-installed with circuit breakers, drop cords, and connectors.

NOTES:

— The QOU and EDU/EGU devices are only available as factory-assembled and include a cover-type front. The QOD unit is available with a door front.

— Six breaker spaces are available for the QOU/QOD unit.

— Three breaker spaces are available for the EDU/EGU unit.

Table 99: Circuit Breakers

Circuit Breaker	Ampere Rating	Interrupting Ratings			Number of Poles
		240 V	480 Y/277 V	600 V	
QO	15–100	10 kA	—	—	1[1], 2, or 3
QOB		10 kA	—	—	
QOU		10 kA	—	—	
QOU-VH	15-60	22 kA	—	—	1, 2, or 3[2]
EDB	15–100	25 kA	18 kA	—	1[1], 2, or 3
EGB		35 kA	35 kA	—	
FA		25 kA	18 kA	14 kA	3

[1] 1-pole breakers may not be available in all amperage ratings.

[2] 3-pole breaker available up to 30 A max.

The short circuit ratings of plug-in units are limited by the mounted busway rating. Receptacles and connectors have a 10 kA short circuit rating.

© 1986–2017 Schneider Electric
All Rights Reserved

Table 100: Receptacles

Receptacle	Ampere Rating	Number of Poles
Duplex—Commercial	15–30	1, 2, or 3
Duplex—Industrial		
Duplex—Isolated Ground		
Locking		
Locking—240 V		
Locking—480 V		

Table 101: Enclosure Ratings

Plug-In Device	Standard Rating	Optional Rating[1]
Tap Box[2]	NEMA 1	IP54
QOR		IPX3 using optional kit, PBP54100QO IP54 using optional kit, PBP54100QO IP54 using optional kit, PBP54100FA
QO		
FA		
EDB		None
EGB		None
QOU		None
QOD		IP54

1 The degree of protection can be increased to IP43 or IP54 using the appropriately rated receptacles.

2 100 A tap box rated IP54 only.

Catalog Numbering System

Table 102: Ready-to-Assemble[1] / Factory-Assembled Plug-In Unit Catalog Numbering System— Devices with Receptacle / Circuit Breaker

PBP	QOR Type of Device	5A Plug-In Jaw Configuration	100 Maximum Amperage Rating	P54 IP Rating	M1 Receptacle Configuration	15B Circuit Breaker and Rating
Powerbus plug-in device	QO = QO circuit breaker only	Refer to the “Busbar Configuration Table” on page 138.	100	Blank = NEMA 1	Refer to the “Receptacle/Circuit Breaker Type Configuration” table on 138 and the “Plug-In Units (Factory-Assembled)” tables on page 140.	15 = 15 Amp QO
	QOR = QO circuit breaker and receptacle			PX3 = IPX3 (QOR only)		15B = 15 Amp QOB
	FA = FA circuit breaker			P43 = IP43		20 = 20 Amp QO
	TB = Tap Box			P54 = IP54		20B = 20 Amp QOB

1 The circuit breakers and receptacles are provided by others.

Table 103: Factory-Assembled Plug-In Unit Catalog Numbering System—Devices with Drop Cords and Connectors

PBP	QOU Type of Device	4A Plug-In Jaw Configuration	100 Maximum Amperage Rating	O 1st Circuit Breaker Position	F 2nd Circuit Breaker Position	O 3rd Circuit Breaker Position	L5 Connector Type	15 Circuit Breaker Amperage Rating	M1 Meter	Carry Handle
Powerbus plug-in device	QOU = QOU circuit breaker unit EDU = EDB circuit breaker unit EGU = EGB circuit breaker unit	Refer to the “Busbar Configuration Table” on page 138.	100 A	Phase connection and drop cord length Refer to “Drop Cord Lengths” on page 138.	Phase connection and drop cord length Refer to “Drop Cord Lengths” on page 138.	Phase connection and drop cord length Refer to “Drop Cord Lengths” on page 138.	Refer to Table 112 on page 142.	15–60 A	M( )= Meter Option Refer to meter suffixes in Table 105 on page 138.	T = Carry Handle Option

© 1986–2017 Schneider Electric
All Rights Reserved

Figure 133: Busbar Configuration Table

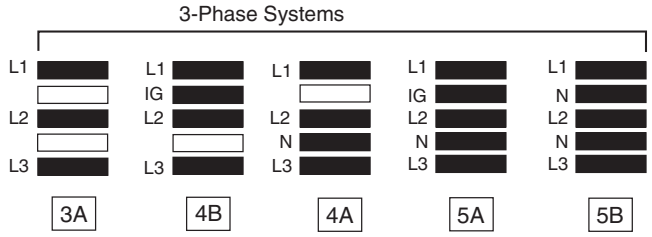

Figure 134: Receptacle/Circuit Breaker Type Configuration

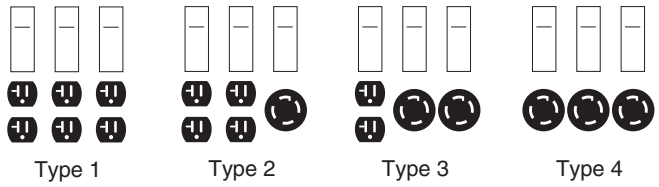

Table 104: Drop Cord Lengths[1]

Positions											
B	**C**	**D**	**E**	**F**	**G**	**H**	**I**	**J**	**K**	**L**	**O**
2 ft (0.6 m)	3 ft (0.9 m)	4 ft (1.2 m)	5 ft (1.5 m)	6 ft (1.8 m)	7 ft (2.0 m)	8 ft (2.4 m)	9 ft (2.7 m)	10 ft (3.0 m)	11 ft (3.4 m)	12 ft (3.7 m)	OPEN (No breaker/drop cord for this position)

1 One 1-pole breaker in the 1st circuit breaker position will be wired on the A phase. One 1-pole breaker in the 2nd circuit breaker position will be wired on the B phase. One 2-pole breaker in the 1st circuit breaker position will be wired on the A and B phases.

Table 105: Metering[1]

Meter Suffix	System Voltage
1	208Y/120 V 3Ø4W
2	240 V 3Ø3W
4	415/240 V 3Ø4W
5	480Y/277 V 3Ø4W

1 Metering only available in EDU/EGU units with drop cords and connectors.

© 1986–2017 Schneider Electric
All Rights Reserved

Plug-In Units (Ready-to-Assemble)

Tap Box (For 225 A and 100 A Busway Only)
Weight: 10 lbs. (5 kg)

NOTE: Conductor lugs–1 #14-1/0 per bar (e.g., "4A" configuration would have four lugs) Ground lugs–1 #14-1/0

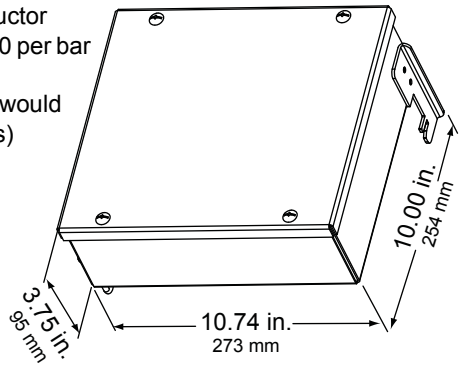

Busbar Configurations	Catalog Number
3A	PBPTB3A100
4B	PBPTB4B100
4A	PBPTB4A100
5A	PBPTB5A100

FA Unit (Provision for One 3-Phase FAP Breaker)
Weight: 13 lbs. (6 kg)

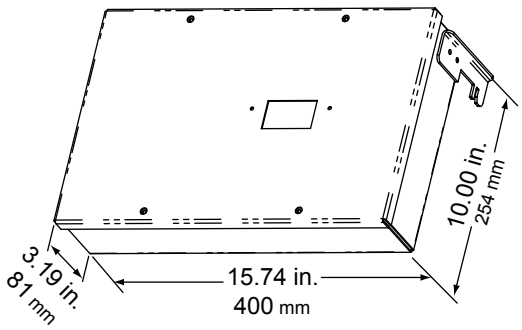

Busbar Configurations	Catalog Number
3A	PBPFA3A100
4B	PBPFA4B100
4A	PBPFA4A100
5A	PBPFA5A100

QO Unit (Provision for Three QO/QOB Breakers)
Weight: 13 lbs. (6 kg)

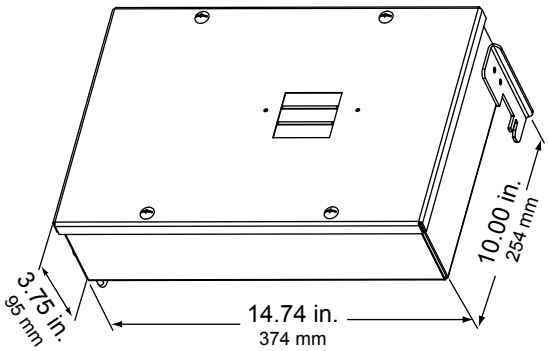

Busbar Configurations	Catalog Number
3A	PBPQO3A100
4B	PBPQO4B100
4A	PBPQO4A100
5A	PBPQO5A100

QOR Unit (Provision for Three QO/QOB Breakers and Three Receptacles)
Weight: 13 lbs. (6 kg)

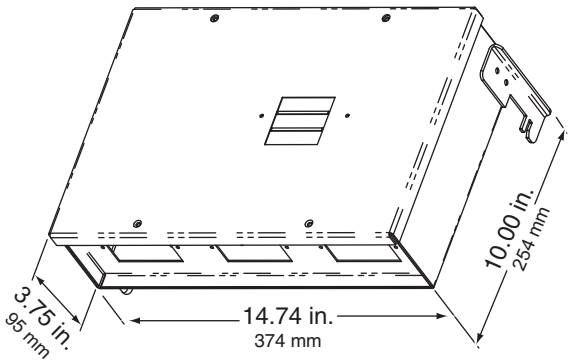

Busbar Configurations	Catalog Number
3A	PBPQOR3A100
4B	PBPQOR4B100
4A	PBPQOR4A100
5A	PBPQOR5A100

© 1986–2017 Schneider Electric
All Rights Reserved

Plug-In Units (Factory-Assembled)

Table 106: FA Unit with Circuit Breaker—600 V Max

FA Unit with Circuit Breaker
Weight: 17 lbs. (8 kg)

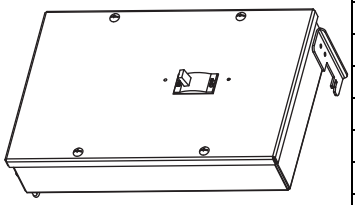

Breaker Rating	Catalog Number				
	3A Configuration	4B Configuration	4A Configuration	5A Configuration	5B Configuration
15	PBPFA3A100A015	PBPFA4B100A015	PBPFA4A100A015	PBPFA5A100A015	PBPFA5B100A015
20	PBPFA3A100A020	PBPFA4B100A020	PBPFA4A100A020	PBPFA5A100A020	PBPFA5B100A020
30	PBPFA3A100A030	PBPFA4B100A030	PBPFA4A100A030	PBPFA5A100A030	PBPFA5B100A030
40	PBPFA3A100A040	PBPFA4B100A040	PBPFA4A100A040	PBPFA5A100A040	PBPFA5B100A040
50	PBPFA3A100A050	PBPFA4B100A050	PBPFA4A100A050	PBPFA5A100A050	PBPFA5B100A050
60	PBPFA3A100A060	PBPFA4B100A060	PBPFA4A100A060	PBPFA5A100A060	PBPFA5B100A060
70	PBPFA3A100A070	PBPFA4B100A070	PBPFA4A100A070	PBPFA5A100A070	PBPFA5B100A070
80	PBPFA3A100A080	PBPFA4B100A080	PBPFA4A100A080	PBPFA5A100A080	PBPFA5B100A080
90	PBPFA3A100A090	PBPFA4B100A090	PBPFA4A100A090	PBPFA5A100A090	PBPFA5B100A090
100	PBPFA3A100A100	PBPFA4B100A100	PBPFA4A100A100	PBPFA5A100A100	PBPFA5B100A100

Table 107: QO/QOR Units with Circuit Breakers and Receptacles—120 V[1]

QO Unit with Circuit Breaker
Weight: 14 lbs. (6 kg)

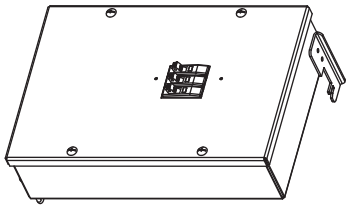

QOR Unit with Circuit Breaker and Receptacles
Weight: 15 lbs. (7 kg)

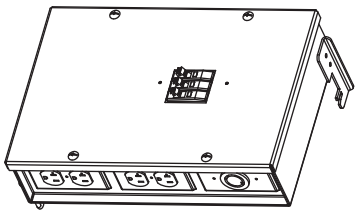

Circuit Breaker		Catalog Number		
Rating	Type	4A Configuration	5A Configuration	5B Configuration
Type 1—Three (3) Circuit Breakers Plus (3) Duplex Receptacles				
15	QO	PBPQOR4A100M115	PBPQOR5A100M115	PBPQOR5B100M115
15	QOB	PBPQOR4A100M115B	PBPQOR5A100M115B	PBPQOR5B100M115B
20	QO	PBPQOR4A100M120	PBPQOR5A100M120	PBPQOR5B100M120
20	QOB	PBPQOR4A100M120B	PBPQOR5A100M120B	PBPQOR5B100M120B
Type 2—Three (3) Circuit Breakers Plus (2) Duplex Receptacles and (1) Single Locking Receptacle				
15	QO	PBPQOR4A100M215	PBPQOR5A100M215	PBPQOR5B100M215
15	QOB	PBPQOR4A100M215B	PBPQOR5A100M215B	PBPQOR5B100M215B
20	QO	PBPQOR4A100M220	PBPQOR5A100M220	PBPQOR5B100M220
20	QOB	PBPQOR4A100M220B	PBPQOR5A100M220B	PBPQOR5B100M220B
Type 3—Three (3) Circuit Breakers Plus (1) Duplex Receptacle and (2) Single Locking Receptacles				
15	QO	PBPQOR4A100M315	PBPQOR5A100M315	PBPQOR5B100M315
15	QOB	PBPQOR4A100M315B	PBPQOR5A100M315B	PBPQOR5B100M315B
20	QO	PBPQOR4A100M320	PBPQOR5A100M320	PBPQOR5B100M320
20	QOB	PBPQOR4A100M320B	PBPQOR5A100M320B	PBPQOR5B100M320B
Type 4—Three (3) Circuit Breakers and (3) Single Locking Receptacles				
15	QO	PBPQOR4A100M415	PBPQOR5A100M415	PBPQOR5B100M415
15	QOB	PBPQOR4A100M415B	PBPQOR5A100M415B	PBPQOR5B100M415B
20	QO	PBPQOR4A100M420	PBPQOR5A100M420	PBPQOR5B100M420
20	QOB	PBPQOR4A100M420B	PBPQOR5A100M420B	PBPQOR5B100M420B

[1] Additional circuit breakers include QO-GFI, QO-HID, QO-K, and QO-EPD. Other factory-assembled units are available using receptacles shown in Table 112 on page 142. Consult your local Schneider Electric representative.

© 1986–2017 Schneider Electric
All Rights Reserved

Table 108: QOU Units with Circuit Breakers, Drop Cords, and Connectors (240 V Max)

QOU Unit with Circuit Breaker
Weight: 15 lbs. (7.5 kg [1])

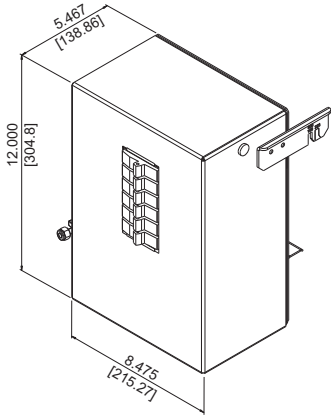

Circuit Breaker		NEMA Connector	Drop Cord Length (ft)	Catalog Number[2]		
Amps	Poles			4A	5A[3]	5B
One circuit breaker plus drop cord and connector						
15	1	L5-15	3	PBPQOU4A100COOL515	PBPQOU5A100COOL515	PBPQOU5B100COOL515
20	1	L5-20	3	PBPQOU4A100COOL520	PBPQOU5A100COOL520	PBPQOU5B100COOL520
30	1	L5-30	3	PBPQOU4A100COOL530	PBPQOU5A100COOL530	PBPQOU5B100COOL530
15	2	L6-15	3	PBPQOU4A100COOL615	PBPQOU5A100COOL615	PBPQOU5B100COOL615
20	2	L6-20	3	PBPQOU4A100COOL620	PBPQOU5A100COOL620	PBPQOU5B100COOL620
30	2	L6-30	3	PBPQOU4A100COOL630	PBPQOU5A100COOL630	PBPQOU5B100COOL630
20	3	L21-20	3	PBPQOU4A100COOL2120	PBPQOU5A100COOL2120	PBPQOU5B100COOL2120
30	3	L21-30	3	PBPQOU4A100COOL2130	PBPQOU5A100COOL2130	PBPQOU5B100COOL2130
15	1	L5-15	6	PBPQOU4A100FOOL515	PBPQOU5A100FOOL515	PBPQOU5B100FOOL515
20	1	L5-20	6	PBPQOU4A100FOOL520	PBPQOU5A100FOOL520	PBPQOU5B100FOOL520
30	1	L5-30	6	PBPQOU4A100FOOL530	PBPQOU5A100FOOL530	PBPQOU5B100FOOL530
15	2	L6-15	6	PBPQOU4A100FOOL615	PBPQOU5A100FOOL615	PBPQOU5B100FOOL615
20	2	L6-20	6	PBPQOU4A100FOOL620	PBPQOU5A100FOOL620	PBPQOU5B100FOOL620
30	2	L6-30	6	PBPQOU4A100FOOL630	PBPQOU5A100FOOL630	PBPQOU5B100FOOL630
20	3	L21-20	6	PBPQOU4A100FOOL2120	PBPQOU5A100FOOL2120	PBPQOU5B100FOOL2120
30	3	L21-30	6	PBPQOU4A100FOOL2130	PBPQOU5A100FOOL2130	PBPQOU5B100FOOL2130

1 Weight will vary based on the connector and length and number of drop cords.

2 Up to three drop cords can be ordered per device for 1-pole and 2-pole breakers. Up to two drop cords can be ordered for 3-pole breakers. Drop cord lengths range from 2 to 12 feet (.610 to 3.658 meters), and lengths can be combined in same device.

3 Drop cord ground terminals are connected to the IG and are marked accordingly.

QOU catalog numbers are for cover front units. Units are also available with door fronts (QOD).

Table 109: EDU Units with Circuit Breakers, 3 ft Drop Cords with NEMA Connectors (240 V Max), and PM5350 Meter

EDU Unit with Circuit Breaker and Meter
Weight: 18 lbs. (8 kg)

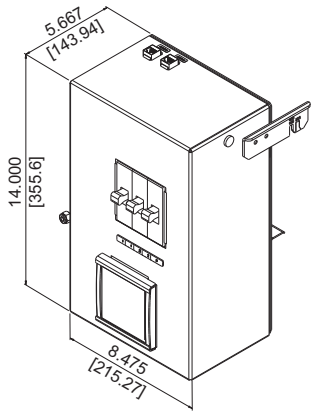

Circuit Breaker		NEMA Connector[1]	Drop Cord Length (ft)	Catalog Number[2]		
Amps	Poles			4A	5A[3]	5B
One ED circuit breaker, drop cord, connector and PM5350 meter (208Y/120 V)						
15	1	L5-15	3	PBPEDU4A100COOL515M1	PBPEDU5A100COOL515M1	PBPEDU5B100COOL515M1
20	1	L5-20	3	PBPEDU4A100COOL520M1	PBPEDU5A100COOL520M1	PBPEDU5B100COOL520M1
30	1	L5-30	3	PBPEDU4A100COOL530M1	PBPEDU5A100COOL530M1	PBPEDU5B100COOL530M1
15	2	L6-15	3	PBPEDU4A100COOL615M1	PBPEDU5A100COOL615M1	PBPEDU5B100COOL615M1
20	2	L6-20	3	PBPEDU4A100COOL620M1	PBPEDU5A100COOL620M1	PBPEDU5B100COOL620M1
30	2	L6-30	3	PBPEDU4A100COOL630M1	PBPEDU5A100COOL630M1	PBPEDU5B100COOL630M1
20	3	L15-20	3	PBPEDU4A100COOL1520M1	PBPEDU5A100COOL1520M1	PBPEDU5B100COOL1520M1
30	3	L15-30	3	PBPEDU4A100COOL1530M1	PBPEDU5A100COOL1530M1	PBPEDU5B100COOL1530M1
20	3	L21-20	3	PBPEDU4A100COOL2120M1	PBPEDU5A100COOL2120M1	PBPEDU5B100COOL2120M1
30	3	L21-30	3	PBPEDU4A100COOL2130M1	PBPEDU5A100COOL2130M1	PBPEDU5B100COOL2130M1

1 Other NEMA Connectors are available.

2 Up to three drop cords can be ordered per device for a 1-pole breaker. One drop cord is available for 2-pole and 3-pole breakers. Circuit breaker and drop cord positions are configurable. Based on system voltage of the busway, the catalog number meter suffix would change.

3 Drop cord ground terminals are connected to the IG and are marked accordingly.

© 1986–2017 Schneider Electric
All Rights Reserved

Table 110: EDU Units with Circuit Breakers, 3 ft Drop Cords with IEC Connectors (480Y/ 277 V Max.), and PM5350 Meter

Circuit Breaker		IEC 60309 Connector[1]	Drop Cord Length (ft)	Catalog Number[2]		
Amps	Poles			4A	5A[3]	5B
One (1) ED circuit breaker, drop cord, connector, and PM5350 Meter (480Y/277 V Max.)						
20	2	2-Pole, 3-Wire Grounding	3	PBPEDU4A100COOS3420M5	PBPEDU5A100COOS3420M5	PBPEDU5B100COOS3420M5
30	2	2-Pole, 3-Wire Grounding	3	PBPEDU4A100COOS3430M5	PBPEDU5A100COOS3430M5	PBPEDU5B100COOS3430M5
60	2	2-Pole, 3-Wire Grounding	3	PBPEDU4A100COOS3460M5	PBPEDU5A100COOS3460M5	PBPEDU5B100COOS3460M5
20	3	3-Pole, 4-Wire Grounding	3	PBPEDU4A100COOS4420M5	PBPEDU5A100COOS4420M5	PBPEDU5B100COOS4420M5
30	3	3-Pole, 4-Wire Grounding	3	PBPEDU4A100COOS4430M5	PBPEDU5A100COOS4430M5	PBPEDU5B100COOS4430M5
60	3	3-Pole, 4-Wire Grounding	3	PBPEDU4A100COOS4460M5	PBPEDU5A100COOS4460M5	PBPEDU5B100COOS4460M5
20	3	4-Pole, 5-Wire Grounding	3	PBPEDU4A100COOS5420M5	PBPEDU5A100COOS5420M5	PBPEDU5B100COOS5420M5
30	3	4-Pole, 5-Wire Grounding	3	PBPEDU4A100COOS5430M5	PBPEDU5A100COOS5430M5	PBPEDU5B100COOS5430M5
60	3	4-Pole, 5-Wire Grounding	3	PBPEDU4A100COOS5460M5	PBPEDU5A100COOS5460M5	PBPEDU5B100COOS5460M5

1 Other IEC Connectors are available.
2 Up to three drop cords can be ordered per device for a 1-pole breaker. One drop cord is available for 2-pole and 3-pole breakers. Circuit breaker and drop cord positions are configurable. Based on system voltage of the busway, the catalog number meter suffix would change.
3 Drop cord ground terminals are connected to the IG and are marked accordingly.

Gateway Unit

The gateway plug-in unit includes one integrated, web-based gateway-server that provides the ability to remotely monitor metered plug-in units through an Ethernet connection. For remote monitoring capabilities, a gateway is required (in the feed unit or in a plug-in unit). Units with metering can be daisy-chained together via modbus back to a gateway. Modbus and ethernet ports are available on the enclosure for the integration of metered plug-in units into any power monitoring and control system. A maximum of 32 units should be modbus daisy-chained together to one gateway unit.

Table 111: Gateway Unit

Gateway Unit Weight: 15 lbs. (7.5 kg)	Catalog Number				
	3A	4B	4A	5A	5B
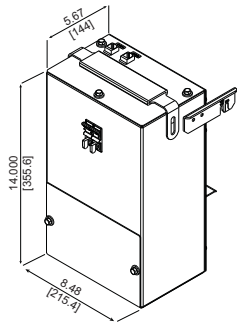	PBPEGX3A100T	PBPEGX4B100T	PBPEGX4A100T	PBPEGX5A100T	PBPEGX5B100T

Table 112: NEMA Receptacles (R) and Connectors (C)

Non-Locking Devices

Wiring	Voltage	15 A	20 A
2-Pole, 3-Wire, Grounding	120	5-15	5-20
2-Pole, 3-Wire, Grounding	240	6-15	6-20
3-Pole, 3-Wire, Grounding	120 / 240	14-15	14-20
3-Pole, 3-Wire, Grounding	3Ø 240	15-15	15-20

Locking Devices

Wiring	Voltage	15 A	20 A	30 A
2-Pole, 3-Wire, Grounding	120	L5-15	L5-20	L5-30
2-Pole, 3-Wire, Grounding	240	L6-15	L6-20	L6-30
3-Pole, 4-Wire, Grounding	120 / 240	—	L14-20	L14-30
3-Pole, 4-Wire, Grounding	3Ø 240	—	L15-20	L15-30
4-Pole, 5-Wire, Grounding	3ØY 120 / 208	—	L21-20	L21-30

NOTES: QOR plug-in units have 1.82 in. x 2.82 in. (46 mm x 72 mm) openings for receptacle bodies and 3.28 in. (83 mm) spacing for #6-32 mounting holes. Additional NEMA connectors may be available. Contact your local Schneider Electric representative.

© 1986–2017 Schneider Electric
All Rights Reserved

Table 113: IEC 60309 Connectors[1]

Wiring	Voltage	20 A	30 A	60 A
2-pole, 3-wire, Grounding	240	320C6	330C6	360C6
	415	320C9	330C9	360C9
3-pole, 4-wire, Grounding	3Ø 240	420C9	430C9	460C9
	3Ø 415	420C6	430C6	460C6
4-pole, 5-wire Grounding	3ØY 120 / 208	520C9	530C9	560C9
	3ØY 415 / 240	520C6	530C6	560C6
	3ØY 480 / 277	520C7	530C7	560C7

1 Additional connectors may be available. Consult your local Schneider Electric representative.

Plug-In Unit Accessories

IP54 Kit (Water-Tight Boot for Circuit Breaker Opening)

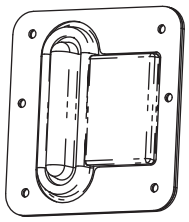

Catalog Number:
FA Unit = PBP54100FA
QO Unit = PBP54100QO

Floor Operator Attachment

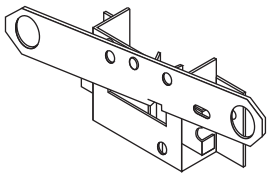

Catalog Number:
FA Unit = PBFO100FA
QO Unit = PBFO100QO

Plug-In Opening Cover

Catalog Number:
PBPIOCVR

Additional Accessories

Table 114: Additional Accessories

Description	Catalog Number
Reverse Feed Label Kit (FA unit only)	PBRFLKIT
Hookstick 8 ft (2.4 m)	515608
Hookstick 14 ft (4.3 m)	515614

© 1986–2017 Schneider Electric
All Rights Reserved

Section 11—Power-Zone™ Metal-Enclosed Busway

General

Power-Zone™ metal-enclosed, non-segregated phase medium and low voltage bus systems are custom-designed and manufactured. Standard sizes and ratings and a complete line of components allow each system to be tailored to suit the requirements of each application, while at the same time provide the reliability that Schneider Electric products are known for providing.

Standard bus systems are available in four basic voltage classes: 600 V, 5 kV, 15 kV, and 38 kV with a full range of continuous self-cooled current ratings and momentary current ratings. Other voltage classes are available upon request.

The following components are also available for all sizes and ratings:

- equipment terminations
- horizontal and vertical elbows
- tee-taps
- phase transpositions
- expansion joints
- vibration joints
- misalignment joints
- wall and floor penetration assemblies
- fire and smoke barriers
- bus supports

Power-Zone bus design and construction is in strict accordance with ANSI Standard C37.23. It can be supplied with full, round edge 98% IACS copper or 57% IACS aluminum bars. Copper contact surfaces are silver-plated. Aluminum contact surfaces are tin-plated. All aluminum electrical connections are fitted with conical washers to maintain a constant contact pressure.

Standard hardware for conductor joints is plated steel for bare connections not exposed to weather or insulated connections where the bus rating does not exceed 5000 A. Hardware is stainless steel for bare connections exposed to weather and all connections where the bus ratings exceeds 5000 A.

With the exception of 600 V class, which is normally uninsulated, the bus conductors are insulated with a flame-retardant, non-hygroscopic, high dielectric strength fluidized bed epoxy insulation rated 266 °F (130 °C). The 5000 V and 15000 V busway joints are insulated with removable insulating boots, while the 38,000 V busway joints are taped.

The 5 kV and the 15 kV bus conductors are mounted and secured against short circuit forces in molded, track resistant, flame-retardant, non-hygroscopic support blocks of glass-reinforced polyester. The UL molded support insulators are ribbed to maximize both tracking distance and mechanical strength. They are spaced as appropriate to maintain the required short circuit strength of the bus. Semi-conducting silicone rubber corona suppression inserts are used between the conductor and support blocks. Porcelain is optional for 5 kV and 15 kV and is standard for 38 kV. The 600 V supports are glass-reinforced polyester.

The bus conductors are completely enclosed in a grounded metal housing for the protection of both personnel and property. The housings are fabricated from painted aluminum, steel, or stainless steel. Aluminum housings are standard and are recommended for current ratings above 2000 A due to the effects of hysteresis associated with ferrous, magnetic housing materials, such as steel.

On outdoor applications, bottom covers are equipped with screened breathers to eliminate the accumulation of moisture within the housing. In addition, manually or themostatically controlled electric strip heaters are provided to aid condensation control.

To complete the system, a line of steel structural supports is also available for both indoor and outdoor applications.

© 1986–2017 Schneider Electric
All Rights Reserved

Standard Construction

- Housing Construction: totally enclosed indoor or outdoor
- Housing Material: aluminum standard; galvanized or stainless steel optional
- Conductors: silver-plated copper or tin-plated aluminum
- Conductor Supports: glass-reinforced polyester or porcelain
- Insulation: fluidized bed epoxy, rated to 266 °F (130 °C)

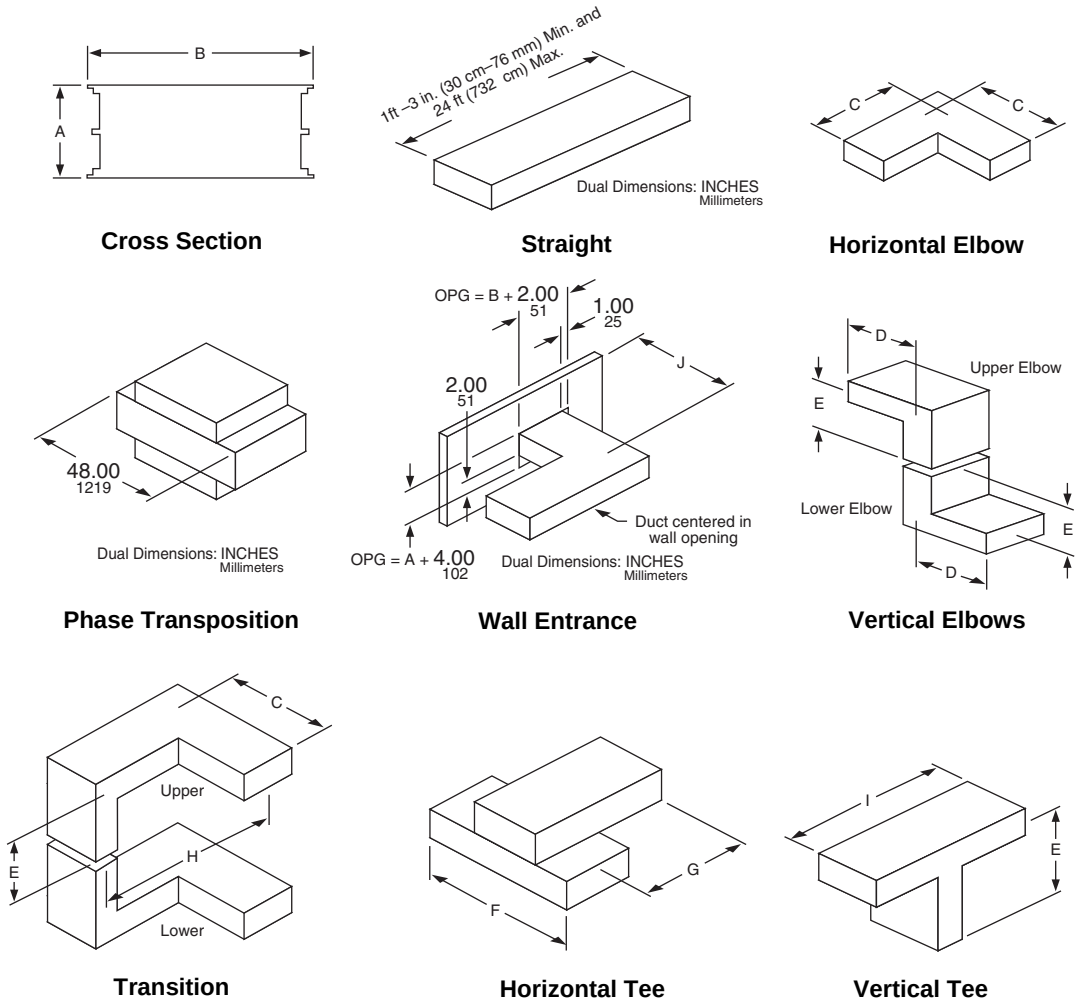

Figure 135: Standard Construction Installation (for weights/dimensions, see Table 115 on page 146)

© 1986–2017 Schneider Electric
All Rights Reserved

Table 115: Power-Zone™ Metal-Enclosed Busway—Minimum Dimensions and Other Specifications

Voltage and Material	Ampere Rating	Wt (Lb)	Dimensions										Resistance Microhms Per Phase Per Foot	Watt Loss Per 3-Phase Foot	Reactance Microhms Per Foot	Impedance Microhms Per Foot
			A		B		C		D		E					
			IN	mm	IN	mm	IN	mm	IN	mm	IN	mm				
Copper 600	1200	29	8.00	203	21.00	533	22.00	559	11.38	289	15.00	381	10.76	46	44.29	45.58
	1600	33	8.00	203	21.00	533	22.00	559	11.38	289	15.00	381	8.50	65	43.46	44.28
	2000	47	10.00	254	21.00	533	22.00	559	12.38	314	16.00	406	5.79	70	37.05	37.50
	2500	54	14.00	356	21.00	533	22.00	559	14.38	365	18.00	457	4.71	88	29.23	29.61
	3200	75	14.00	356	27.00	686	25.00	635	14.38	365	18.00	457	3.91	120	31.84	32.08
	4000	111	14.00	356	36.00	914	30.00	762	14.38	365	18.00	457	3.47	166	41.93	42.07
	5000	131	24.00	610	42.00	1067	33.00	838	19.38	492	23.00	584	2.78	209	42.54	42.63
	6000	147	28.00	711	42.00	1067	33.00	838	21.38	543	25.00	635	2.41	260	24.76	24.88
Aluminum 600	1200	21	8.00	203	21.00	533	22.00	559	11.38	289	15.00	381	13.41	58	43.46	45.48
	1600	26	10.00	254	21.00	533	22.00	559	12.38	314	16.00	406	8.76	67	37.05	38.07
	2000	32	14.00	356	21.00	533	22.00	559	14.38	365	18.00	457	6.16	74	28.79	29.44
	2500	37	14.00	356	27.00	686	25.00	635	14.38	365	18.00	457	5.61	105	31.84	32.33
	3200	47	14.00	356	27.00	686	25.00	635	14.38	365	18.00	457	4.10	126	41.93	42.13
Copper 5000 and 15000	1200	34	14.00	356	27.00	686	25.00	635	14.38	365	18.00	457	15.09	65	56.50	58.48
	1600	41	14.00	356	27.00	686	25.00	635	14.38	365	18.00	457	8.50	65	54.37	55.03
	2000	55	14.00	356	30.00	762	27.00	686	14.38	365	18.00	457	5.79	70	51.20	51.53
	2500	64	14.00	356	36.00	914	30.00	762	14.38	365	18.00	457	4.71	88	48.76	48.98
	3000	85	14.00	356	36.00	914	30.00	762	14.38	365	18.00	457	4.03	109	42.88	43.07
	4000	125	14.00	356	36.00	914	30.00	762	14.38	365	18.00	457	3.47	166	41.93	42.07
	5000	143	24.00	610	42.00	1067	33.00	838	19.38	492	23.00	584	2.78	209	42.54	42.63
	6000	162	28.00	711	42.00	1067	33.00	838	21.38	543	25.00	635	2.41	260	24.76	24.88
Aluminum 5000 and 15000	1200	30	14.00	356	27.00	686	25.00	635	14.38	365	18.00	457	13.41	58	54.37	56.00
	1600	34	14.00	356	30.00	762	27.00	686	14.38	365	18.00	457	8.76	67	51.20	51.95
	2000	41	14.00	356	36.00	914	30.00	762	14.38	365	18.00	457	6.16	74	48.32	48.71
	2500	44	14.00	356	30.00	762	27.00	686	14.38	365	18.00	457	5.68	107	42.52	42.89
	3000	55	14.00	356	36.00	914	30.00	762	14.38	365	18.00	457	4.32	117	41.93	42.15
Copper 38000	600	84	24.00	610	51.00	1295	37.00	940	24.00	610	23.00	584	15.44	17	76.97	78.50
	1200	84	24.00	610	51.00	1295	37.00	940	24.00	610	23.00	584	15.44	67	76.97	78.50
	1600	89	24.00	610	51.00	1295	37.00	940	24.00	610	23.00	584	10.76	83	68.89	69.73
	2000	93	24.00	610	51.00	1295	37.00	940	24.00	610	23.00	584	8.37	100	62.93	63.48
	2500	111	24.00	610	51.00	1295	37.00	940	24.00	610	23.00	584	4.68	88	53.83	54.03
	3000	120	24.00	610	51.00	1295	37.00	940	24.00	610	23.00	584	3.99	108	53.39	53.54
Aluminum 38000	600	78	24.00	610	51.00	1295	37.00	940	24.00	610	23.00	584	25.46	27	76.97	81.07
	1200	79	24.00	610	51.00	1295	37.00	940	24.00	610	23.00	584	17.23	74	68.89	71.01
	1600	81	24.00	610	51.00	1295	37.00	940	24.00	610	23.00	584	13.41	58	68.06	69.36
	2000	82	24.00	610	51.00	1295	37.00	940	24.00	610	23.00	584	11.33	136	62.28	63.30

© 1986–2017 Schneider Electric
All Rights Reserved

Table 115: Power-Zone Metal-Enclosed Busway—Minimum Dimensions and Other Specifications *(continued)*

Voltage and Material	Ampere Rating	Wt (Lb)	Dimensions										Resistance Microhms Per Phase Per Foot	Watt Loss Per 3-Phase Foot	Reactance Microhms Per Foot	Impedance Microhms Per Foot
			F		G		H		I		J					
			IN	mm	IN	mm	IN	mm	IN	mm	IN	mm				
Copper 600	1200	29	48.00	1219	22.00	559	18.25	464	28.00	711	17.00	432	10.76	46	44.29	45.58
	1600	33	48.00	1219	22.00	559	18.25	464	28.00	711	17.00	432	8.50	65	43.46	44.28
	2000	47	48.00	1219	22.00	559	19.25	489	30.00	762	17.00	432	5.79	70	37.05	37.50
	2500	54	48.00	1219	22.00	559	21.25	540	34.00	864	17.00	432	4.71	88	29.23	29.61
	3200	75	60.00	1524	25.00	635	24.25	616	34.00	864	20.00	508	3.91	120	31.84	32.08
	4000	111	60.00	1524	30.00	762	28.75	730	34.00	864	25.00	635	3.47	166	41.93	42.07
	5000	131	60.00	1524	33.00	838	36.75	933	44.00	1118	28.00	711	2.78	209	42.54	42.63
	6000	147	60.00	1524	33.00	838	38.75	984	48.00	1219	28.00	711	2.41	260	24.76	24.88
Aluminum 600	1200	21	48.00	1219	22.00	559	18.25	464	28.00	711	17.00	432	13.41	58	43.46	45.48
	1600	26	48.00	1219	22.00	559	19.25	489	30.00	762	17.00	432	8.76	67	37.05	38.07
	2000	32	48.00	1219	22.00	559	21.25	540	34.00	864	17.00	432	6.16	74	28.79	29.44
	2500	37	60.00	1524	25.00	635	24.25	616	34.00	864	20.00	508	5.61	105	31.84	32.33
	3200	47	60.00	1524	25.00	635	24.25	616	34.00	864	20.00	508	4.10	126	41.93	42.13
Copper 5000 and 15000	1200	34	60.00	1524	25.00	559	24.25	616	34.00	864	20.00	508	15.09	65	56.50	58.48
	1600	41	60.00	1524	25.00	559	24.25	616	34.00	864	20.00	508	8.50	65	54.37	55.03
	2000	55	60.00	1524	27.00	686	25.75	654	34.00	864	22.00	589	5.79	70	51.20	51.53
	2500	64	60.00	1524	30.00	762	28.75	730	34.00	864	25.00	635	4.71	88	48.76	48.98
	3000	85	60.00	1524	30.00	762	28.75	730	34.00	864	25.00	635	4.03	109	42.88	43.07
	4000	125	60.00	1524	30.00	762	28.75	730	34.00	864	25.00	635	3.47	166	41.93	42.07
	5000	143	60.00	1524	33.00	838	36.75	933	44.00	1118	28.00	711	2.78	209	42.54	42.63
	6000	162	60.00	1524	33.00	838	38.75	984	48.00	1219	28.00	711	2.41	260	24.76	24.88
Aluminum 5000 and 15000	1200	30	60.00	1524	25.00	559	24.25	616	34.00	864	20.00	508	13.41	58	54.37	56.00
	1600	34	60.00	1524	27.00	686	25.75	654	34.00	864	22.00	589	8.76	67	51.20	51.95
	2000	41	60.00	1524	30.00	762	28.75	730	34.00	864	25.00	635	6.16	74	48.32	48.71
	2500	44	60.00	1524	27.00	686	25.75	654	34.00	864	22.00	589	5.68	107	42.52	42.89
	3000	55	60.00	1524	30.00	762	28.75	730	34.00	864	25.00	635	4.32	117	41.93	42.15
Copper 38000	600	84	84.00	2134	37.00	940	45.88	1165	48.00	1219	33.00	838	15.44	17	76.97	78.50
	1200	84	84.00	2134	37.00	940	45.88	1165	48.00	1219	33.00	838	15.44	67	76.97	78.50
	1600	89	84.00	2134	37.00	940	45.88	1165	48.00	1219	33.00	838	10.76	83	68.89	69.73
	2000	93	84.00	2134	37.00	940	45.88	1165	48.00	1219	33.00	838	8.37	100	62.93	63.48
	2500	111	84.00	2134	37.00	940	45.88	1165	48.00	1219	33.00	838	4.68	88	53.83	54.03
	3000	120	84.00	2134	37.00	940	45.88	1165	48.00	1219	33.00	838	3.99	108	53.39	53.54
Aluminum 38000	600	78	84.00	2134	37.00	940	45.88	1165	48.00	1219	33.00	838	25.46	27	76.97	81.07
	1200	79	84.00	2134	37.00	940	45.88	1165	48.00	1219	33.00	838	17.23	74	68.89	71.01
	1600	81	84.00	2134	37.00	940	45.88	1165	48.00	1219	33.00	838	13.41	58	68.06	69.36
	2000	82	84.00	2134	37.00	940	45.88	1165	48.00	1219	33.00	838	11.33	136	62.28	63.30

NOTES:

1. Performance values are calculated using a maximum conductor temperature rise of 149 °F (65 °C) and the full rated continuous current in a 68 °F (20 °C) ambient.
2. All data is based upon standard 3-phase, totally enclosed, non-ventilated, aluminum enclosures.
3. The table information is based on standard Power-Zone bus construction. Other bus bar sizes and arrangements are available to meet the purchaser's required electrical characteristics and space considerations. Use of steel housing could require a derating of the busway. Consult your local Schneider Electric representative for more information.

© 1986–2017 Schneider Electric
All Rights Reserved

Power-Zone™ Bus Standard Construction

- Bus Bar Material: copper and aluminum
- Bus Bar Plating:
  - — Copper-silver (contact)
  - — Aluminum-tin (contact)
- Insulation:
  - — 600 V Uninsulated; epoxy optional
  - — 5 kV, 15 kV, or 38 kV fluidized bed epoxy
- Bus Bar Supports: 5 kV, 15 kV Glass-reinforced polyester standard; porcelain optional; 38 kV porcelain standard
- Housing Material: aluminum standard (steel optional)

Bus Supports

Indoor trapeze hangers, outdoor single- or double-column supports, and wall-mounted knee braces are available. Outdoor structural steel supports are hot-dipped galvanized after fabrication or primed and painted after fabrication, as required. Indoor supports are primed and painted to match the bus housing color.

Power-Zone™ bus is designed and constructed for unbraced spans of 12–20 ft (366–610 cm). Consult your local Schneider Electric representative for longer unbraced spans.

Recommended support heights, spacing, and locations are determined by the factory and shown on the bus drawings. Information on moments, reactions, and foundation loading (due to rain, wind, and snow) can be furnished upon request.

The bus assemblies are mounted to their respective supports by means of hold-down clip angles that permit longitudinal movement of the bus duct to eliminate stresses from thermal expansion and contraction.

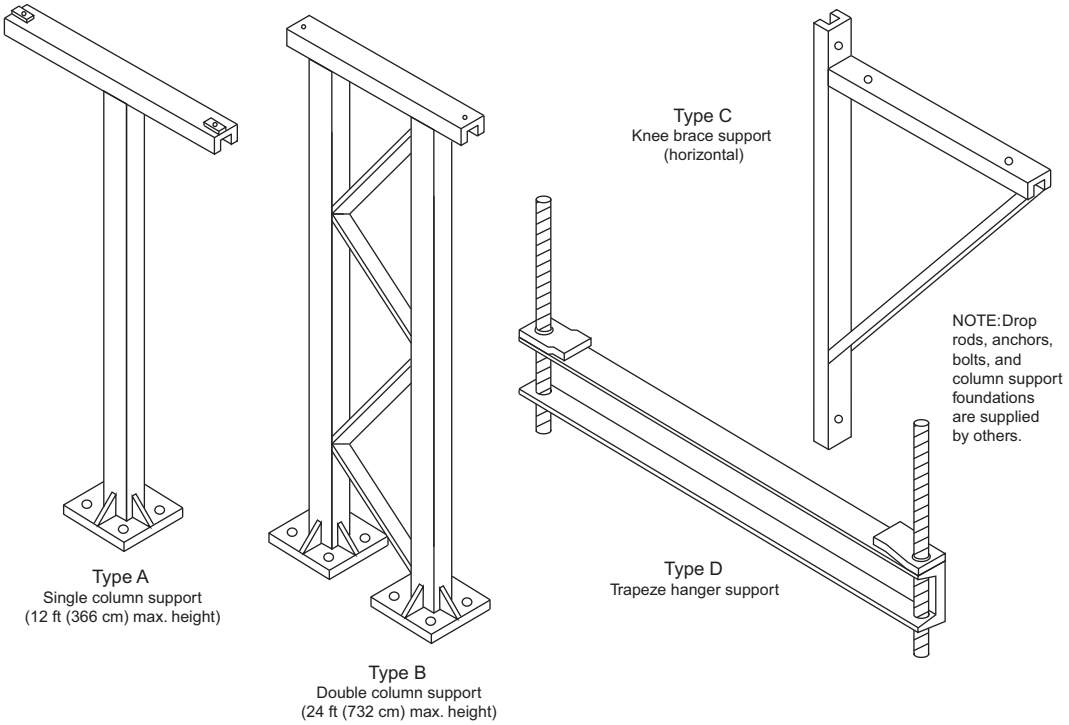

Figure 136: Bus Supports

© 1986–2017 Schneider Electric
All Rights Reserved

Layout and Instructions

Fitting Description

- Non-segregated phase bus
- 600 V through 15 kV (1200–5000 A)
- Aluminum, steel, or stainless steel housing
- Aluminum or copper bus bars
- Insulated with fluidized bed epoxy (5 kV–38 kV)
- Complete line of fittings provides for any configuration
- Indoor trapeze and outdoor column supports
- For use in utilities, industrial, and commercial facilities

Power-Zone bus is custom designed, manufactured, and tested per ANSI Standard C37.23 to meet customer specifications. It is a completely coordinated package of equipment with all the auxiliary material and supports for connecting transformers, switchgear, MCCs, and motors in all types of utility, industrial, and commercial facilities.

Transformer Connection

This type of termination should be used whenever the bus is connecting to a transformer, motor, switch, or any connection where the bus bars are connecting to porcelain-mounted equipment terminals. It will include the same components as a flanged end plus one set of flexible braid-type connectors and a terminal box (if required.)

Generator Connection

All "Transformer Connection" information above applies to general connection with the addition that enclosure bellows should be included when the busway attaches to a generator.

Bushing Box (Weatherhead)

A bushing box is used on a service entrance run where the cable connection to the bus must be made via porcelain bushings. It is comprised of the same components as a transformer connection plus three (3) through-stud type apparatus bushings, bushing stud connectors (lug pads), and a strip heater.

Ground Bus

The bus housing is designed and constructed to provide an electrically continuous ground path. The side rails of the bus housings are capable of carrying the full-rated phase current continuously and, under short circuit conditions, are capable of carrying fault current for three (3) seconds. Consequently, a separate ground bus is not necessary unless specified.

Wall Entrance Seal

A wall entrance seal consists of an external wall frame and a vapor barrier that prevents air or vapor from passing from one room to another or from outdoors to indoors. One-, two-, and three-hour fire ratings are optional.

Equipment Entrance Seal

An equipment entrance seal should be used whenever a barrier is required to prevent the passing of flame and or gasses between the bus housing and the terminating equipment.

Expansion Fittings

An expansion fitting is used to counteract the strain placed on the bus due to the expansion and contraction of the building or the bus itself. One should be used whenever the bus run crosses a building expansion joint and whenever a straight run of bus exceeds 80 feet (2438 cm).

Housing Bellows (Misalignment) Collar

Required at terminations or wall penetrations when equipment vibrations or seismic forces cause damage to the bus. It can also be used to adjust for the “settling” of terminating equipment after installation.

© 1986–2017 Schneider Electric
All Rights Reserved

Flanged Ends

A flanged end is used to terminate the bus into switchgear, motor control centers, switchboards, or any rigid bus-to-bus connection. It consists of a gasketed equipment flange, up to 1 foot (30 cm) of 3Ø-3W conductor (3Ø4W as applicable), necessary insulation tapes, and required bolting hardware. If additional conductor length is required, contact your local Schneider Electric representative.

Cable Tap Box

A cable tap box includes a gasketed and accessible termination box, lugs, necessary insulation tape (between bus and lugs only), and required bolting hardware. Lug sizes and quantity should be specified by purchaser.

Supporting Steel (Hangers)

Supports should be added on the basis of one for every 12 to 15 feet (366 to 457 cm) of busway. Indoor supports are a trapeze-type hanger while outdoor supports are a single- or double-column type support. Consult your local Schneider Electric representative for other type supports.

Hazardous Locations

Consult your local Schneider Electric representative for bus runs that are to be installed in a location that is classified as hazardous.

General Layout Instruction

1. Prepare a layout sketch (if applicable) of the run(s) showing all dimensions in feet and inches, all wall and floor locations, and thicknesses and all fittings such as elbows, tees, flanged ends, cable tap boxes, expansion fittings, transformer connections, etc.
2. Add all dimensions together using the center line of the bus and adjust the total to the higher whole foot.
3. Contact your local Schneider Electric representative for assistance in laying out or pricing this product.

Bus Footage

The per foot price of the bus can be a combination of several prices depending on the job specifications and requirements. Some of these options are special momentary rating, special housing material and/or finish, special conductor supports, heaters and thermostats, and ground bus.

Weatherproof Bus

Weatherproof bus is priced the same as indoor. In addition, all weatherproof runs must be equipped with strip heaters to eliminate condensation and, if applicable, a thermostat. A heater should be priced for every 7 feet (213 cm) of bus. No more than 20 heaters can be controlled by one thermostat. Also, each bus run should have its own thermostat. The heaters operate at 120 V.

© 1986–2017 Schneider Electric
All Rights Reserved

Typical Layout

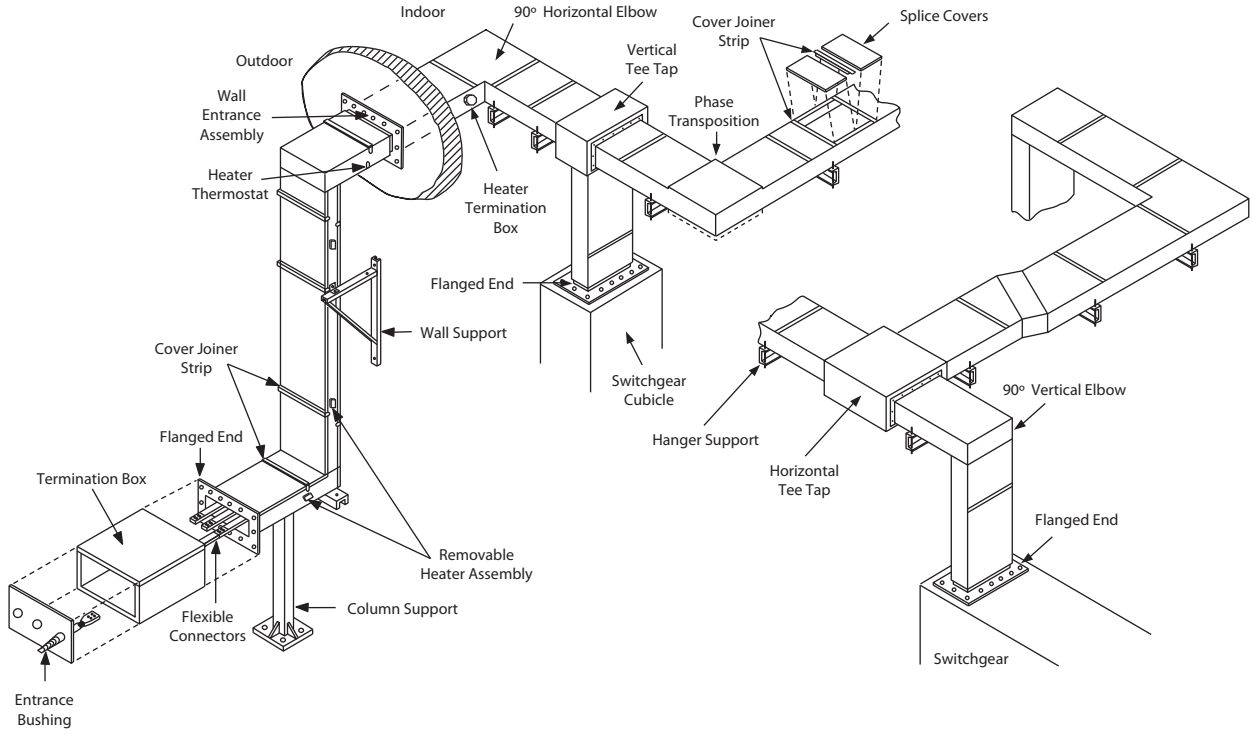

Figure 137: Typical Layout Example

© 1986–2017 Schneider Electric
All Rights Reserved

Schneider Electric USA, Inc.
800 Federal Street
Andover, MA 01810 USA
888-778-2733
www.schneider-electric.us

Importado en México por:
Schneider Electric México, S.A. de C.V.
Av. Ejercito Nacional No. 904
Col. Palmas, Polanco 11560 México, D.F.
55-5804-5000
www.schneider-electric.com.mx

Schneider Electric Canada, Inc.
5985 McLaughlin Road
Mississauga, ON L5R 1B8 Canada
800-565-6699
www.schneider-electric.ca

Schneider Electric, I-Line, Micrologic, Powerlogic, Powerpact, Power-Zone, Square D, and Visi-Tite are trademarks and the property of Schneider Electric SE, its subsidiaries, and affiliated companies. All other trademarks are the property of their respective owners.

Schneider Electric, I-Line, Micrologic, Powerlogic, Powerpact, Power-Zone, Square D, y Visi-Tite son marcas comerciales y propiedad de Schneider Electric SE, sus filiales y compañías afiliadas. Todas las otras marcas comerciales son propiedad de sus respectivos propietarios.

Schneider Electric, I-Line, Micrologic, Powerlogic, Powerpact, Power-Zone, Square D, et Visi-Tite sont des marques commerciales et la propriété de Schneider Electric SE, ses filiales et compagnies affiliées. Toutes les autres marques commerciales sont la propriété de leurs propriétaires respectifs.

5600CT9101R03/17
Replaces / Reemplaza / Remplace 5600CT9101R08/15, 10/2016
© 1986–2017 Schneider Electric All Rights Reserved / Reservados todos los derechos / Tous droits réservés

06/2017