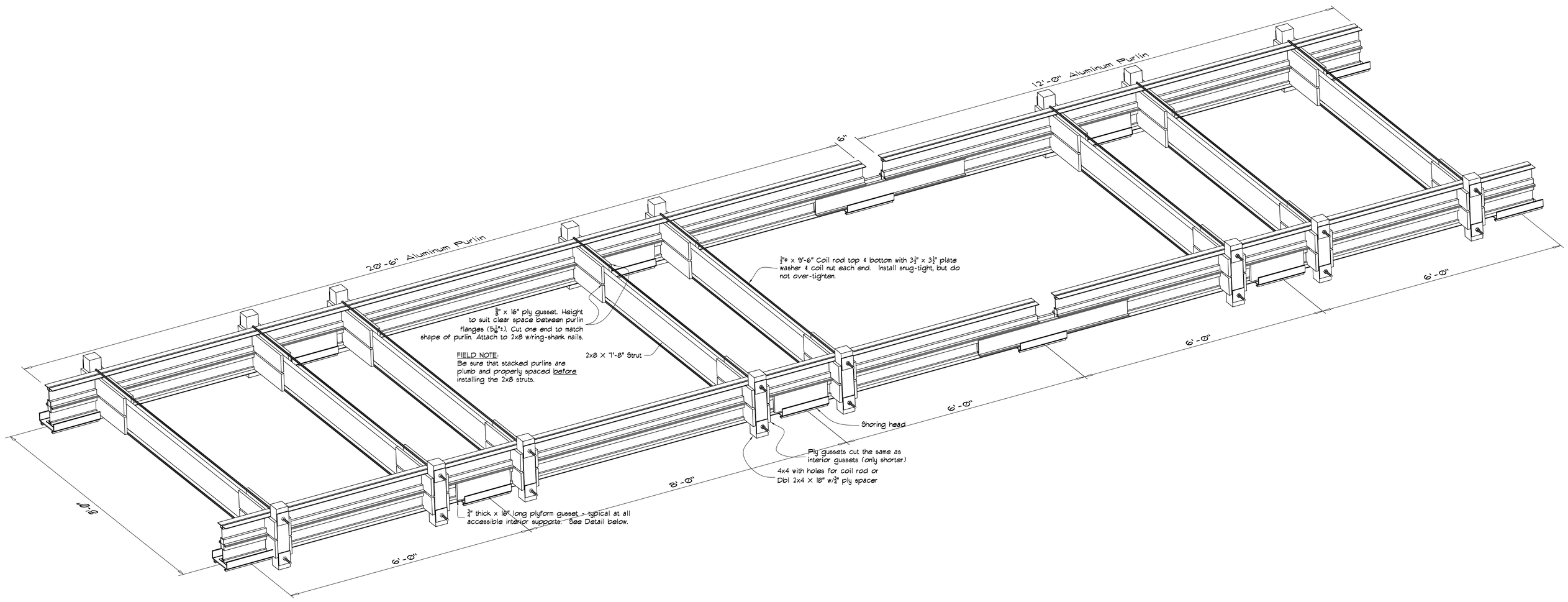
12'-0" Aluminum Purlin
6"
20'-6" Aluminum Purlin
½"ϕ x 9'-6" Coil rod top & bottom with 3½" x 3½" plate washer & coil nut each end. Install snug-tight, but do not over-tighten.
⅝" x 16" ply gusset. Height to suit clear space between purlin flanges (5 1/16"±). Cut one end to match shape of purlin. Attach to 2x8 w/ring-shank nails.
FIELD NOTE:
Be sure that stacked purlins are plumb and properly spaced before installing the 2x8 struts.
2x8 X 7'-8" Strut
6'-0"
6'-0"
6'-0"
Shoring head
Ply gussets cut the same as interior gussets (only shorter)
4x4 with holes for coil rod or Dbl 2x4 X 18" w/¾" ply spacer
8'-0"
¾" thick x 16" long plyform gusset - typical at all accessible interior supports. See Detail below.
8'-0"
6'-0"

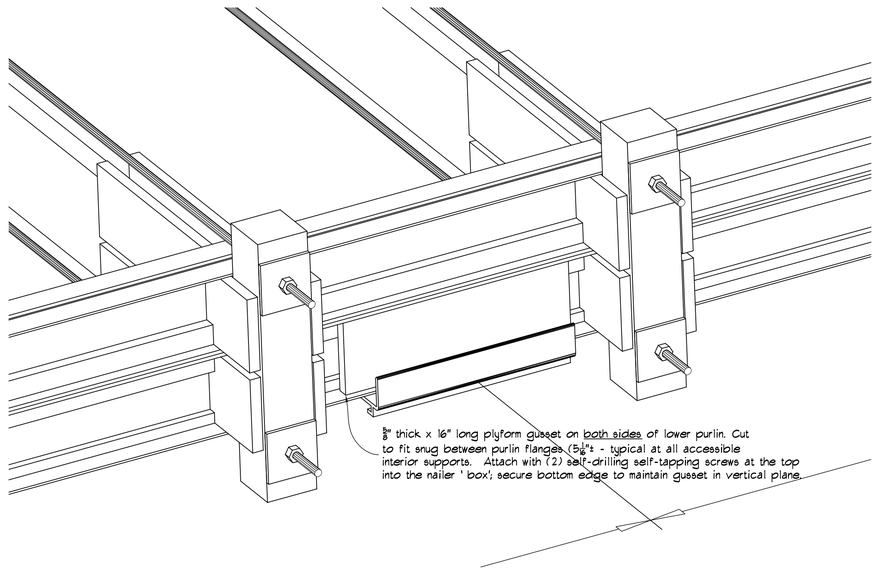
⅝" thick x 16" long plyform gusset on both sides of lower purlin. Cut to fit snug between purlin flanges (5 1/16"± - typical at all accessible interior supports. Attach with (2) self-drilling self-tapping screws at the top into the nailer 'box'; secure bottom edge to maintain gusset in vertical plane.