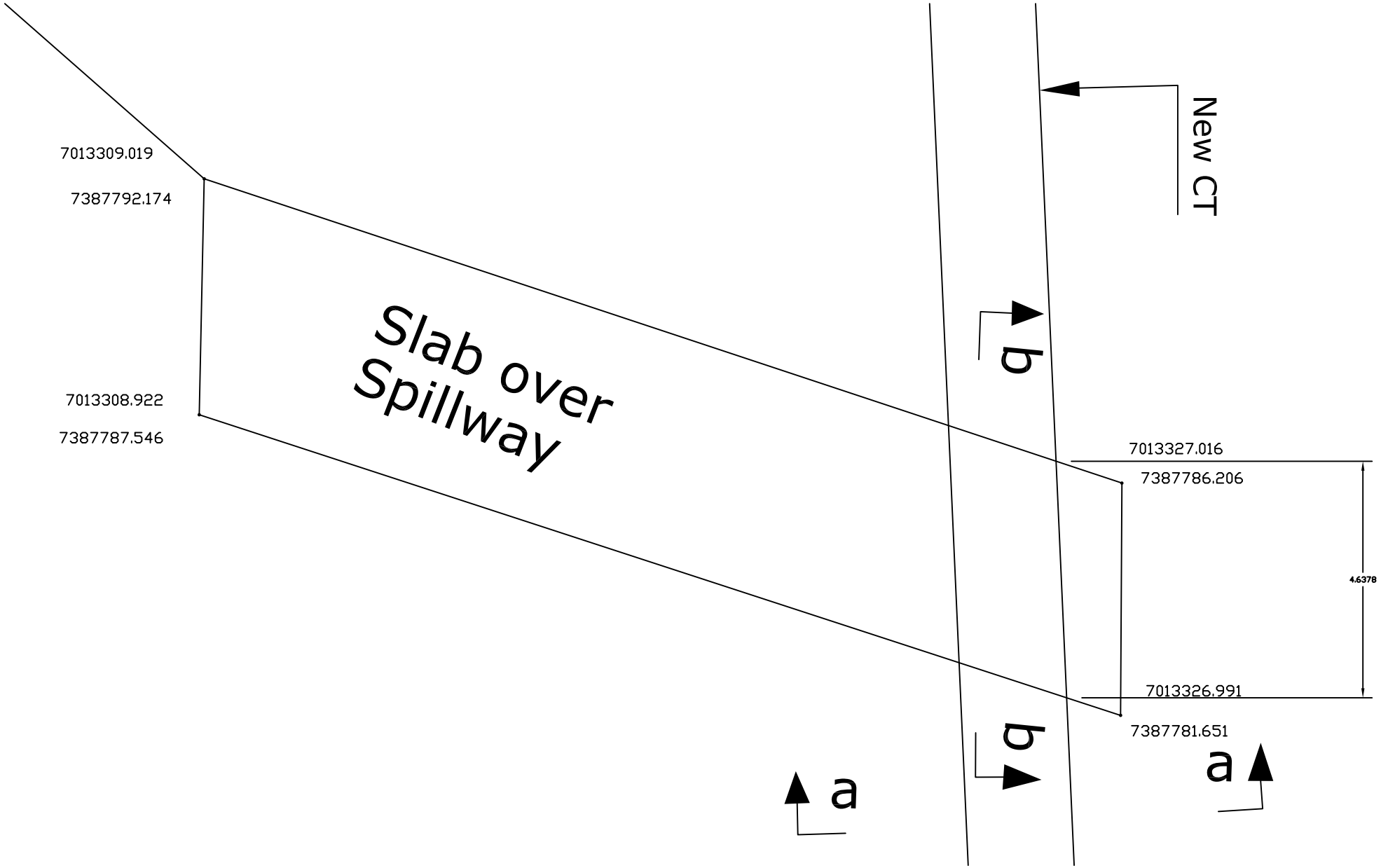
7013309.019
7387792.174
7013308.922
7387787.546
Slab over
Spillway
New CT
b
b
a
a
7013327.016
7387786.206
4.6378
7013326.991
7387781.651

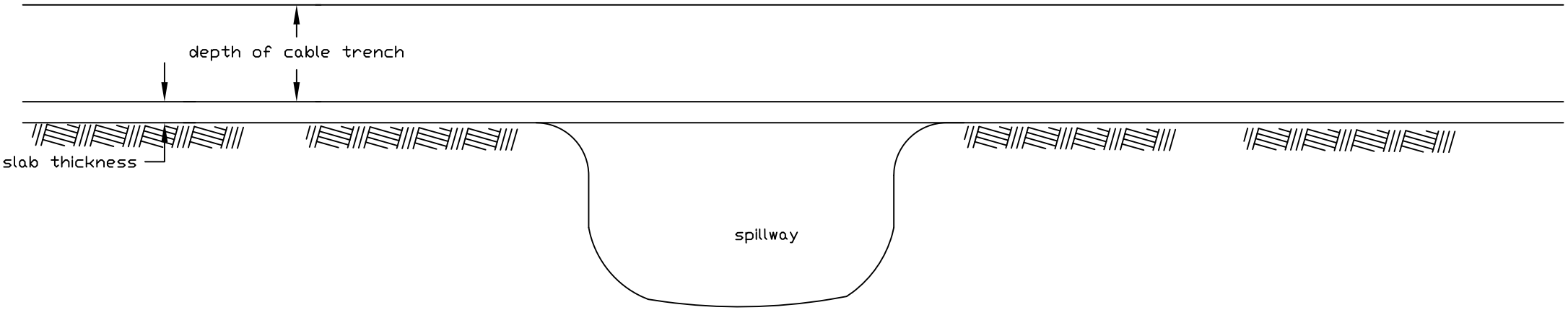

section b-b

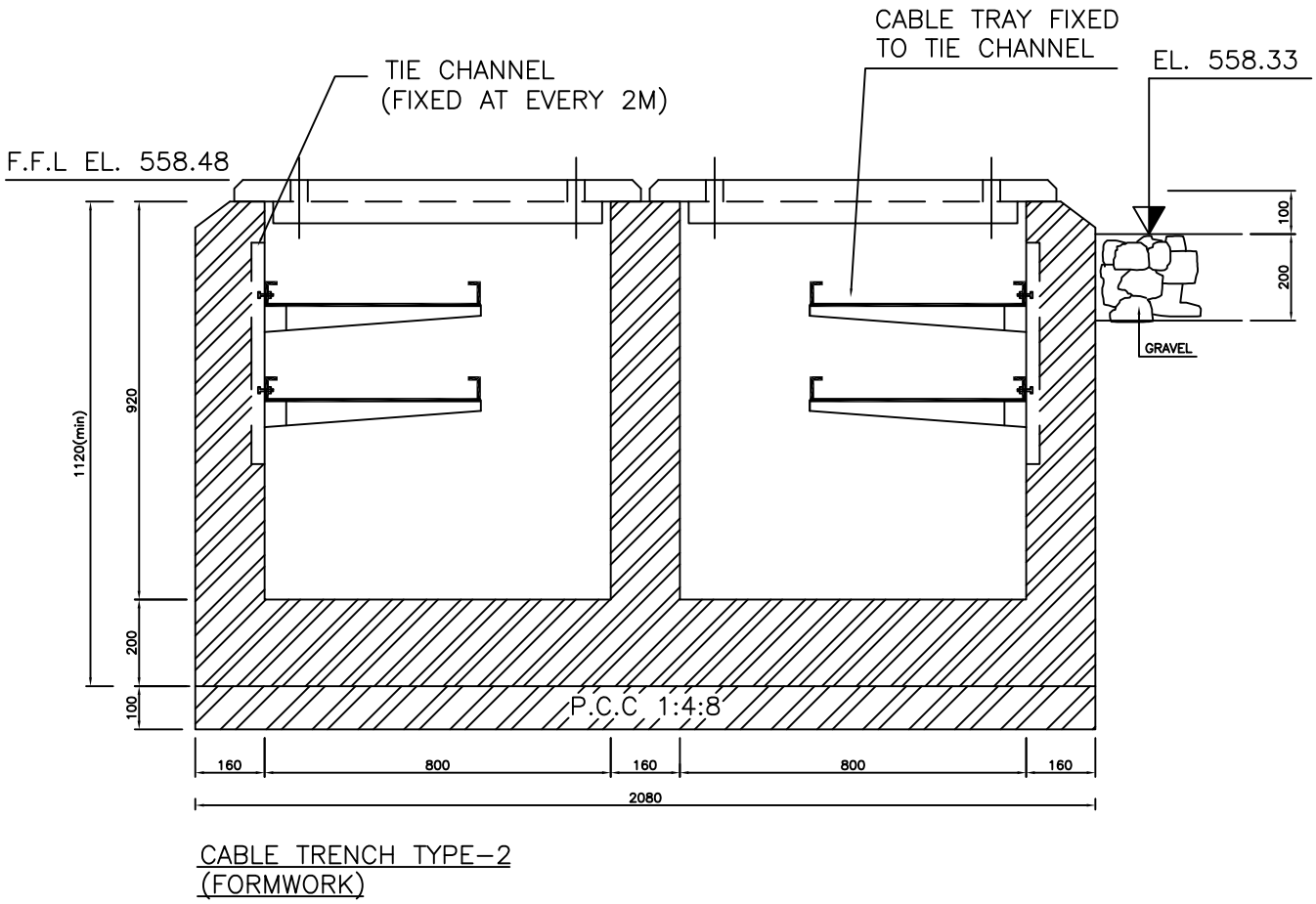
CABLE TRAY FIXED
TO TIE CHANNEL
EL. 558.33
TIE CHANNEL
(FIXED AT EVERY 2M)
F.F.L EL. 558.48
100
200
GRAVEL
1120(min)
920
200
100
P.C.C 1:4:8
160
800
160
800
160
2080
CABLE TRENCH TYPE-2
(FORMWORK)

section a-a