Fin Connections: Cantilevered Fin

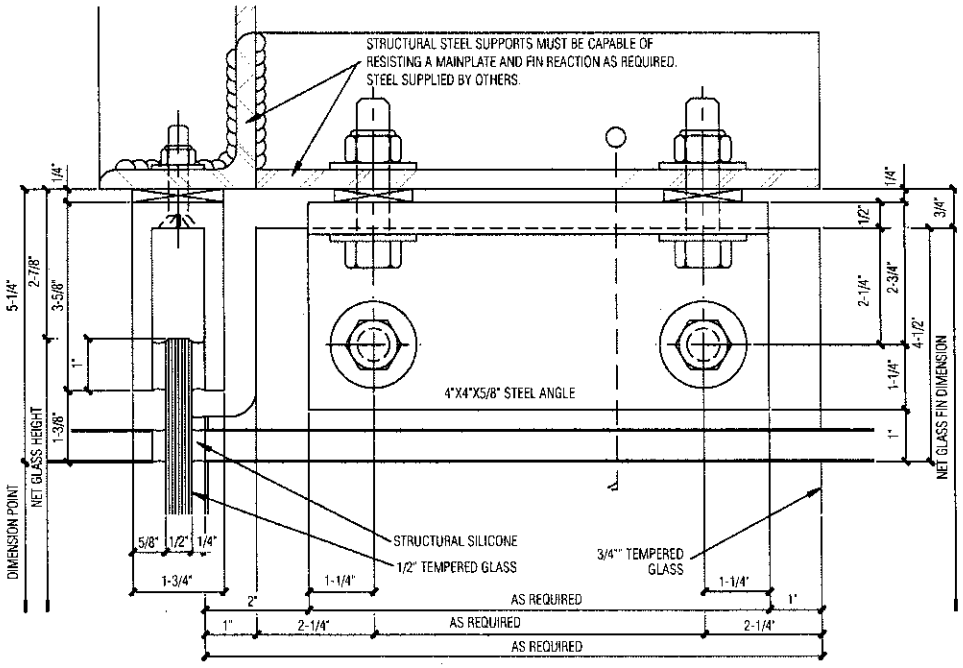

SECTION THROUGH FACADE

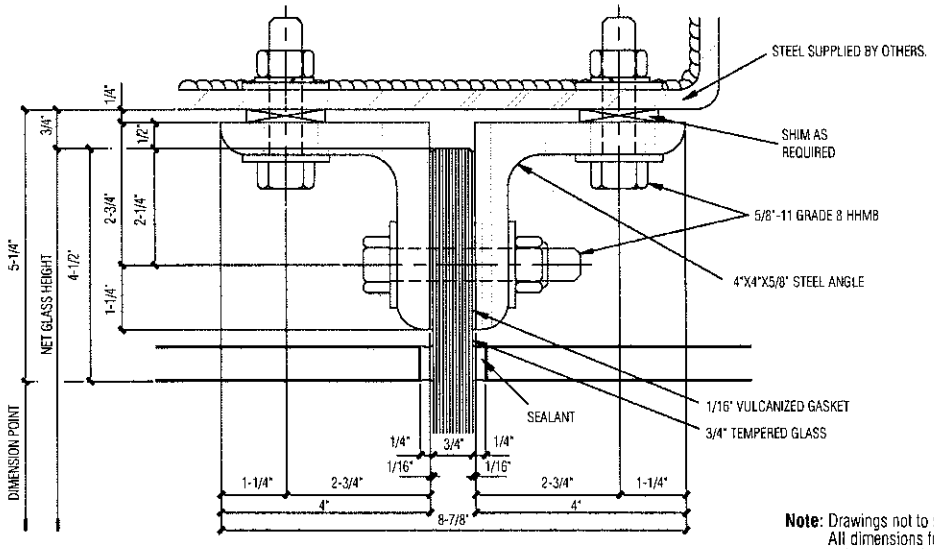

SECTION THROUGH FIN

Note: Drawings not to scale. All dimensions for reference only. Actual values based on project design and conditions.