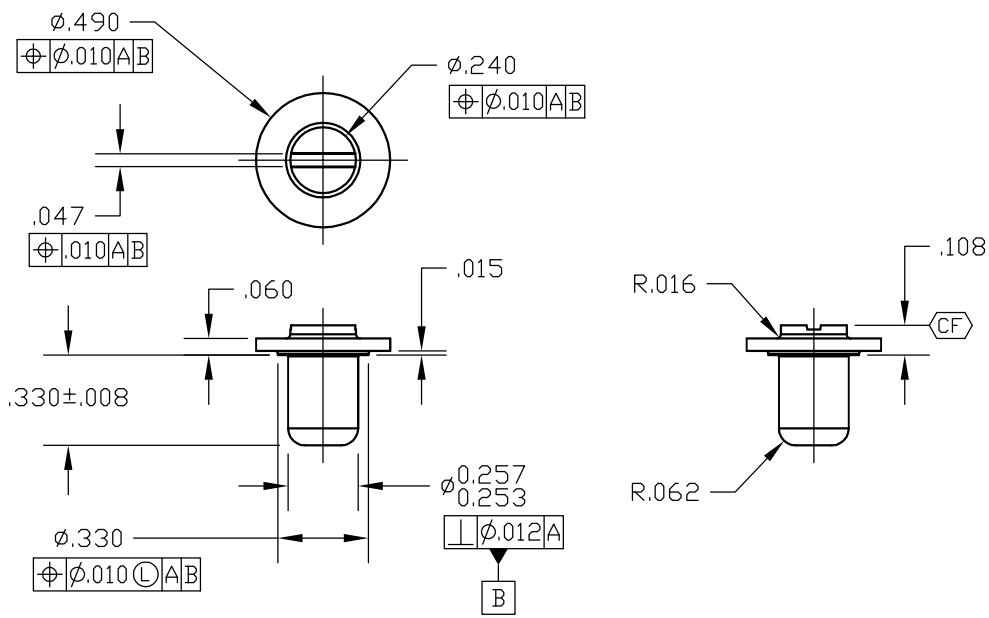

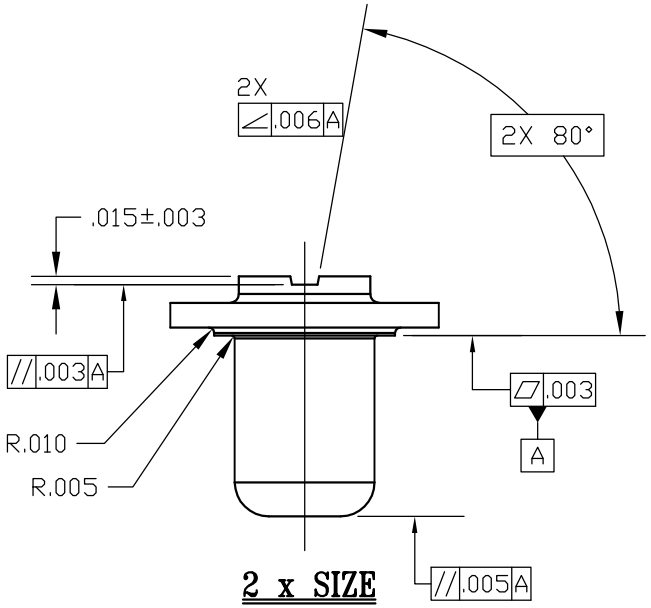

NOTES:

1) DRAWING PREPARED IN ACCORDANCE WITH ASME Y14.5-2009.
2) MODEL P-08429.PRT.4

NO.	REVISION	BY	DATE	APP. BY

MATERIAL		PROTOTYPE PART NO.	
		CASTING NO.	MAT'L. SPEC. NO.
DRAWN BY	DATE 10/18/16	NAME	
CHECKED BY	DATE		
APP. BY	DATE	SCALE 2:1	DWG. SIZE B / MODEL NO.
FRACTIONS ± 1/64 X.X ± X.XX ± X.XXX ± .005 ANGLE ± 1° UNLESS OTHERWISE SPECIFIED	UNITS INCH PROJECTION	PART NO. P-08429	