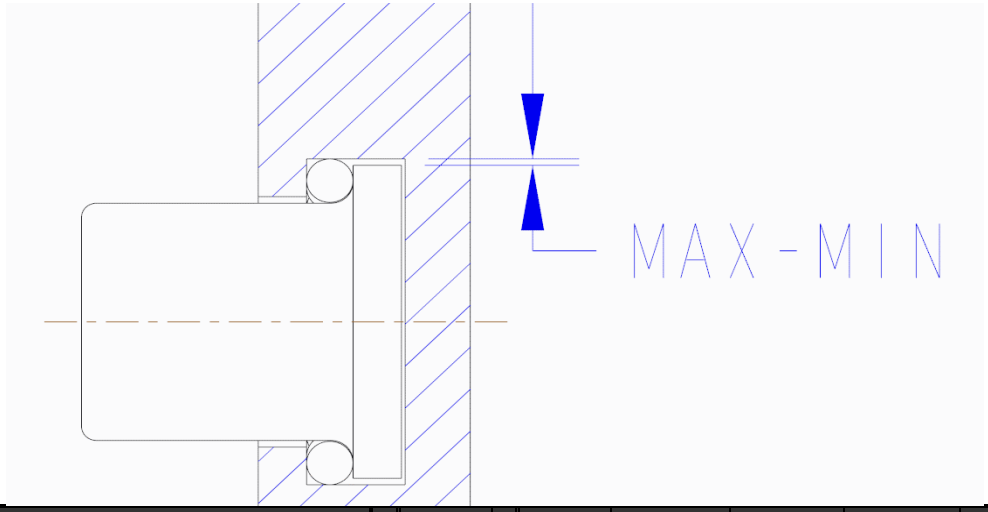

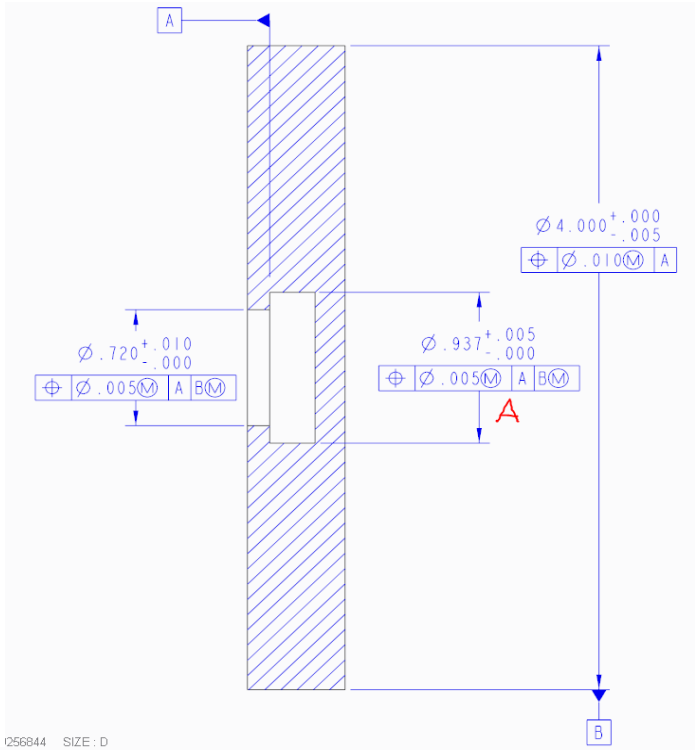

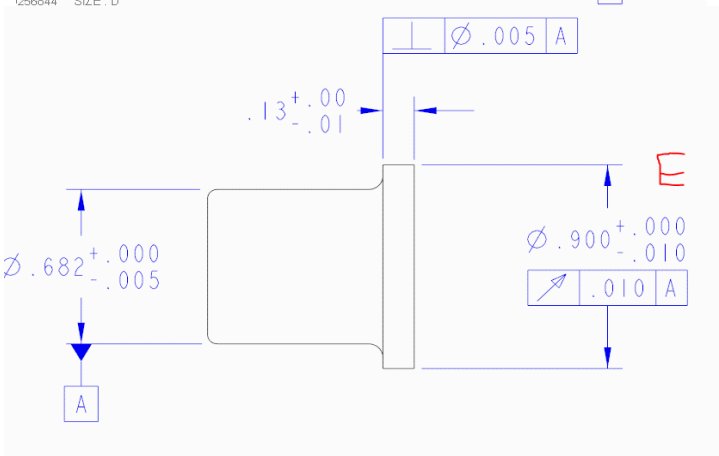

STEP ID		DESCRIPTION FROM/TO		MAXIMUM		MINIMUM				
			+	MAX	+	MIN				
			-	MIN	-	MAX				
A		Cavity	+	0.471	+	0.4685				
B		Position Tolerance	+	0.0025	-	0.0025				
C		Bonus Tolerance	+	0.0025						
D		Datum Shift	+		-					
E		Swivel	-	0.445	-	0.45				
F		Runout Tolerance	+	0.005	-	0.005				
H										
COMMENTS:		SUB TOTALS		0.036		0.011				
		ANSWER								
		DESIGN GOAL:								