FOUNDATION PLAN AND ELEVATION S:\13120085-02 OCC\CIVIL\ENGINEERING CALCULATIONS\VESSELS\CHANDRA\38-T 201\38-T-201 FND FINAL 03-06-08.VVS

Proj. No.: 13-120085-03 Engr: Chandra Date: 5/29/2008 Checker: _____ Date: _____

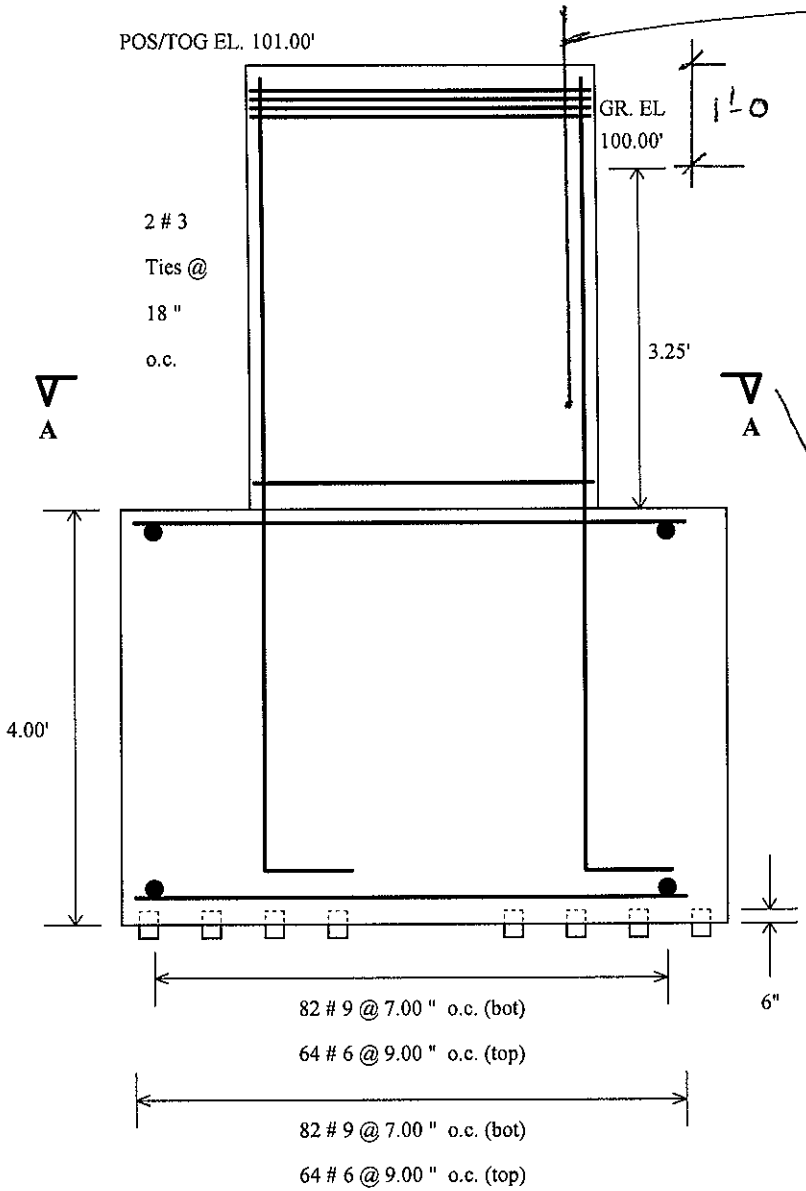

ELEVATION LOOKING NORTH

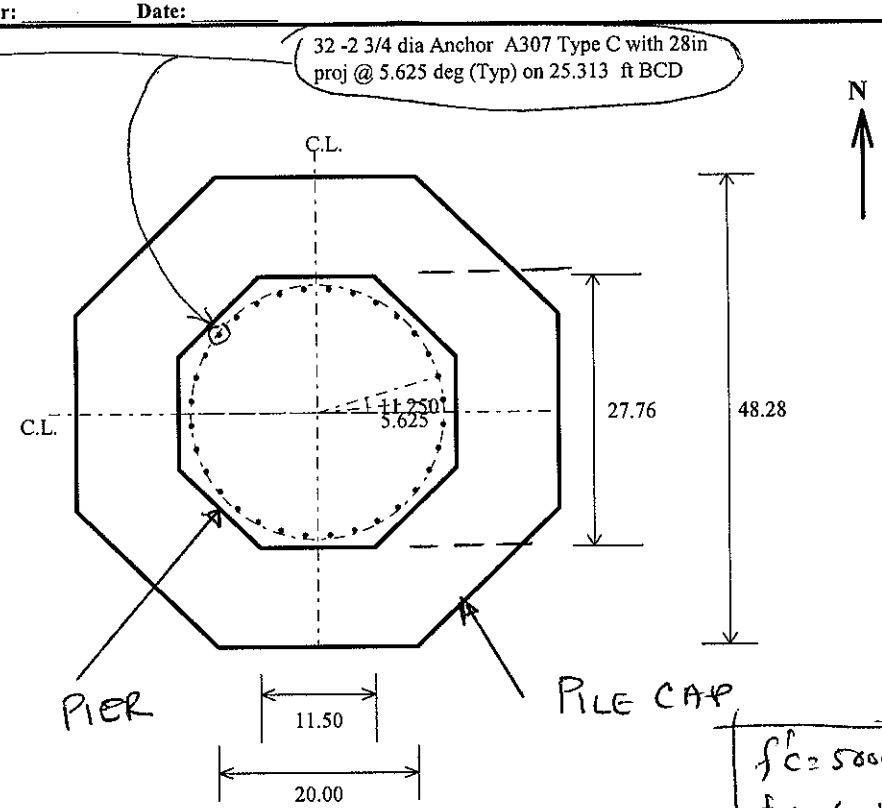

PLAN (1 REQD.) (All dimensions in ft)

$f'_c = 5000$ psi
$f_y = 60$ ksi

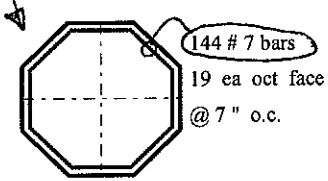

SECT A-A

PIER

MATERIAL QUANTITIES		
CONCRETE	384.6	(CY)
FORMWORK	1030.9	(SF)
REINF. STEEL	35094.6	(LB)
EXCAVATION	832.7	(CY)

FOUNDATION PLAN & ELEV FOR
38-T-201

38-T-201

ANCHOR BOLT DESIGN

EDGE DIMENSIONS FOR TENSION
ASSUMED # OF ANCHORS IN TENSION = 1

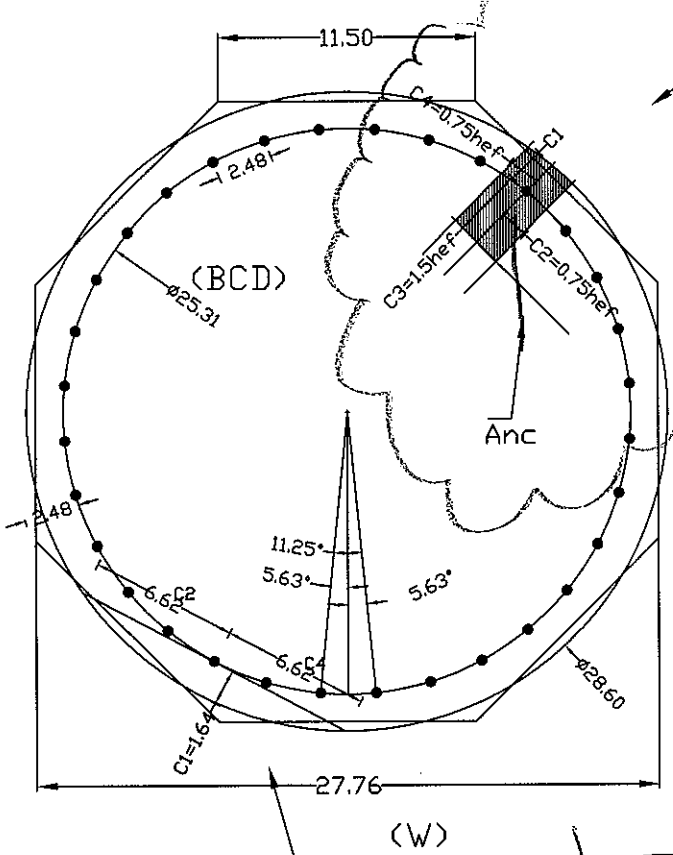

hef = embedment length= ~~36"=3'~~ 46".

C1= (W*BCD)/2 =

C2=C4=(PI)*BCD/n = = 0

Anc= (1.5hef+C1)*(C2+~~C2~~+C4) =

~~Conservatively use bolt spacings for C2, C4~~

EDGE DIMENSIONS FOR SHEAR
(PIPSTE-0251 /2003 p A-6

PIER

BY : CHANDRA 03-03-2008
CHK:

21

38-T-201

ANCHOR BOLT DESIGN

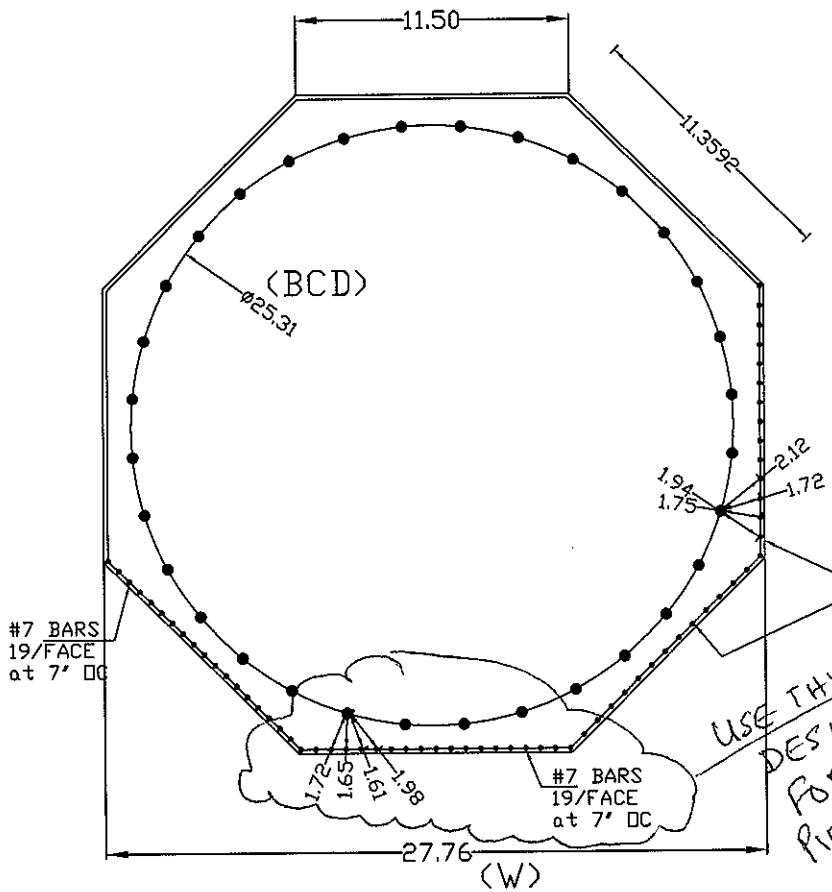

USE THIS DESIGN FOR PIER REINF

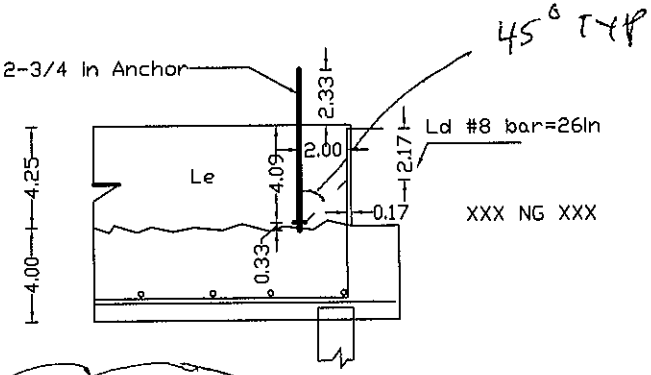

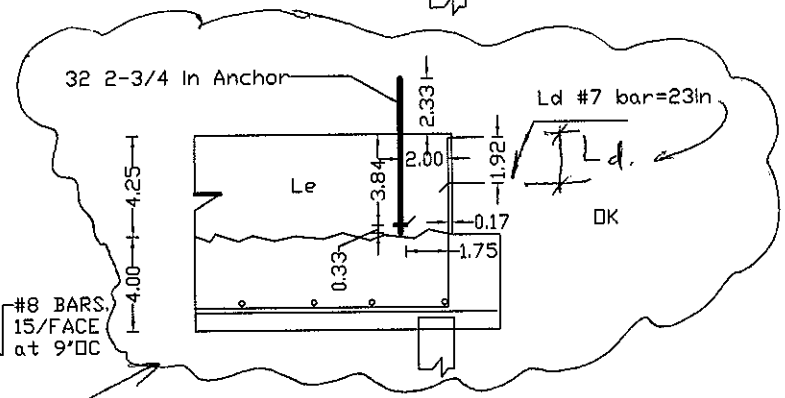

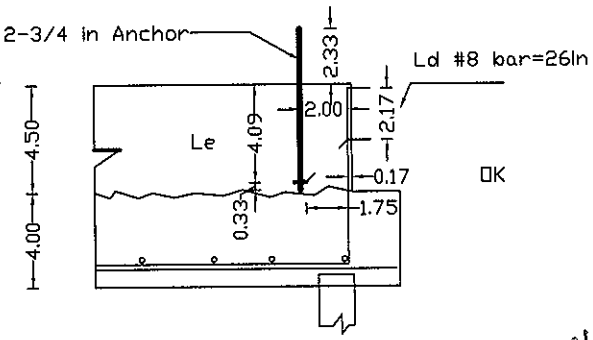

$f'_c = 5000$ psi

F'c= 5000 psi
fy = 60 ksi
ANCHOR BOLT: ASTM A307 TYPE -C

BY : CHANDRA 03-03-2008
CHK: