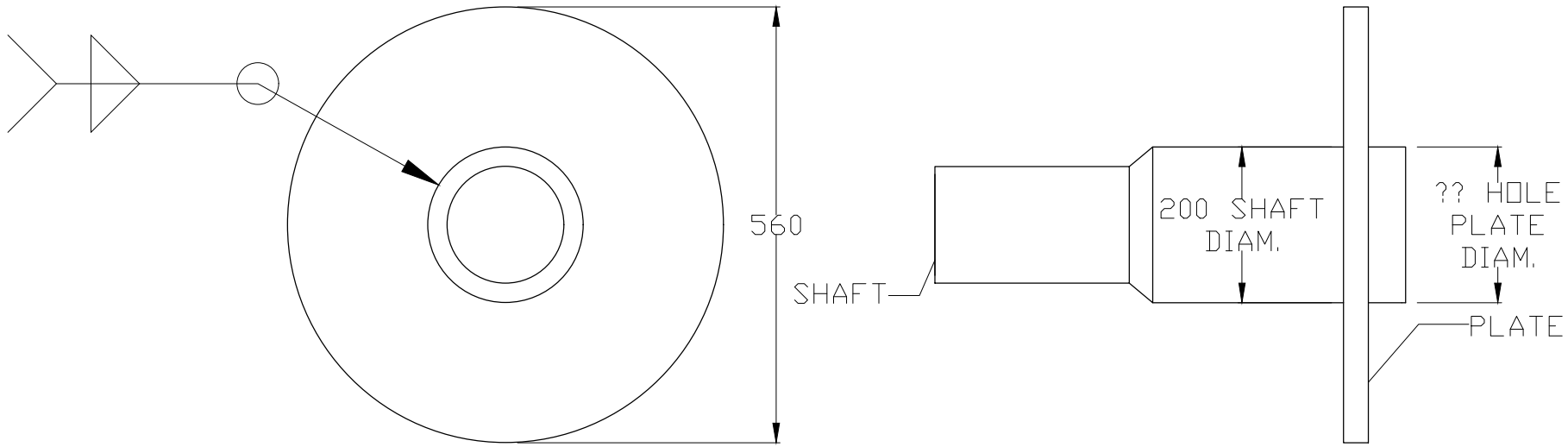
560
SHAFT
200 SHAFT
DIAM.
?? HOLE
PLATE
DIAM.
PLATE