macc @ cmtco.com

No. 802,495. PATENTED OCT. 24, 1905.

M. F. CHRISTENSEN.

MACHINE FOR MAKING SPHERICAL BODIES OR BALLS.

APPLICATION FILED DEC. 19, 1902. RENEWED MAR. 29, 1905.

2 SHEETS—SHEET 1.

Marble Sizes

1/2 inch

3/4 inch

1 inch

1 1/4 inch

1 1/2 inch

1 3/4 inch

2 inch

FIG. 1.

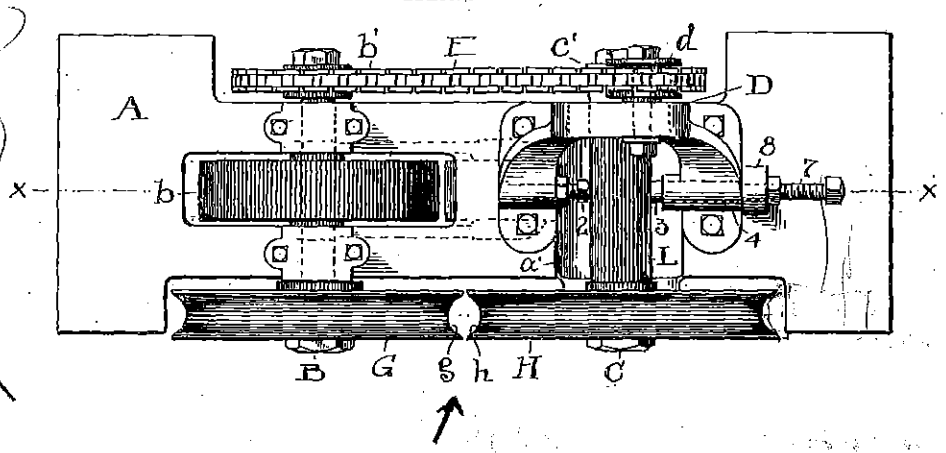


FIG. 2.

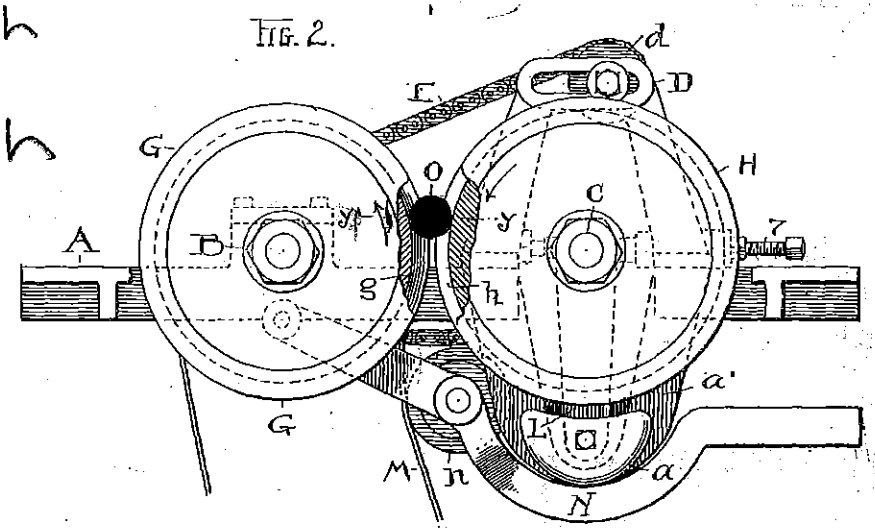


Roller H:
. Larger
. wider

Key to sizing parts

FIG. 5.

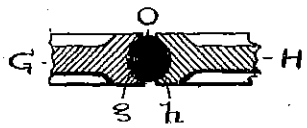


ATTEST

R. B. Moore

A. M. Moser

INVENTOR.

Martin F. Christensen

BY H. T. Fisher ATTY

No. 802,495. PATENTED OCT. 24, 1905.

M. F. CHRISTENSEN.

MACHINE FOR MAKING SPHERICAL BODIES OR BALLS.

APPLICATION FILED DEC. 19, 1902. RENEWED MAR. 20, 1905.

2 SHEETS—SHEET 2.

FIG. 3.

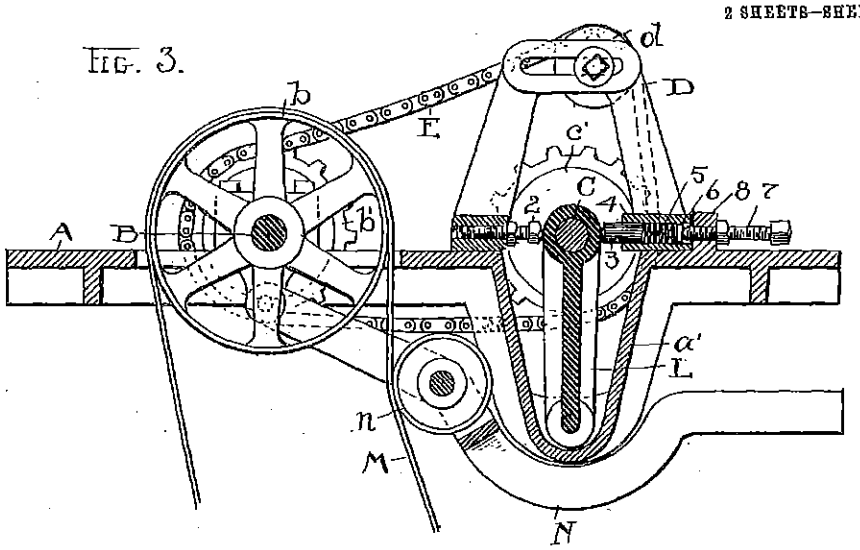


FIG. 6.

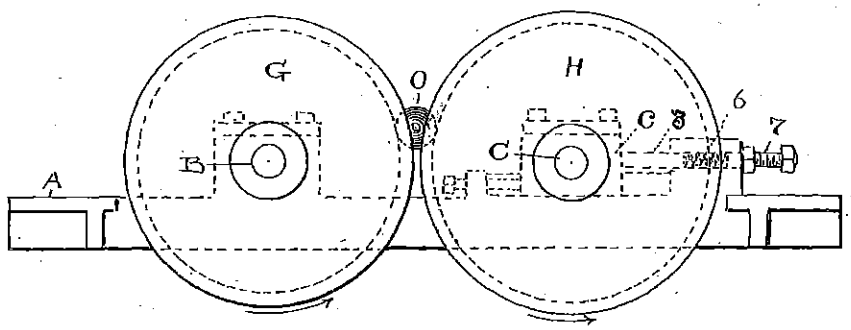


FIG. 4.

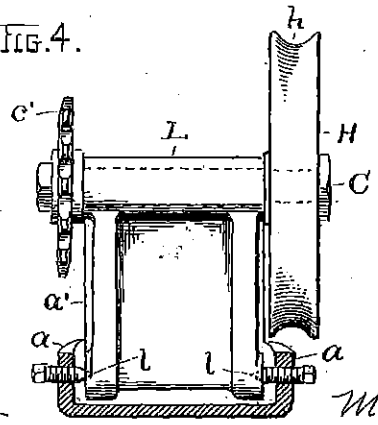


ATTEST

W. B. Moore

A. M. Moore

INVENTOR.

Martin F. Christensen

BY H. S. Fraser ATTY

# UNITED STATES PATENT OFFICE.

MARTIN F. CHRISTENSEN, OF AKRON, OHIO.

## MACHINE FOR MAKING SPHERICAL BODIES OR BALLS.

No. 802,495. Specification of Letters Patent. Patented Oct. 24, 1905.

Application filed December 19, 1902. Renewed March 29, 1905. Serial No. 252,076.

*To all whom it may concern:*

Be it known that I, MARTIN F. CHRISTENSEN, a citizen of the United States, residing at Akron, in the county of Summit and State of Ohio, have invented certain new and useful Improvements in Machines for Making Spherical Bodies or Balls; and I do declare that the following is a full, clear, and exact description of the invention, which will enable others skilled in the art to which it appertains to make and use the same.

My invention relates to a machine for making spherical bodies or balls; and the object of the invention is to provide a machine which is adapted to receive plastic materials of different kinds and in varying quantities, according to the size of sphere wanted, and to roll the same into the form of a perfect sphere or ball, all substantially as shown and described, and particularly pointed out in the claims.

In the accompanying drawings, Figure 1 is a plan view of my machine in a complete and operative condition, and Fig. 2 is a side elevation thereof. Fig. 3 is a longitudinal sectional elevation of the machine on line *x x*, Fig. 1. Fig. 4 is an elevation of the rocking support, which carries one of the rollers or rolling wheels with the roller or wheel and its shaft thereon and showing a cross-section of the main frame carrying said support, as hereinafter more fully described. Fig. 5, Sheet 1, is a cross-section of the adjacent portions of the two rollers, taken on line *y y*, Fig. 2, and showing a ball lodged between the rollers as occurs in actual practice. Fig. 6, Sheet 2, is a side elevation of a modification of the machine.

The machine thus shown is adapted to produce perfect spheres without other or further finishing or dressing than the machine itself gives to the article in the place where and at the time the sphere or ball is rolled, and while the machine can be successfully employed to convert many different kinds of materials into balls or ball shape it is especially well adapted to the production of glass balls or spheres, and for the purposes of this description it may be assumed that the machine is used especially for the manufacture of glass balls of different sizes, from small marbles to balls of an inch or more in diameter, the matter of size not being material. It may be further observed in this connection that the machine is comparatively small in size, since the original drawings in this case are about half the full size of a machine adapted to produce balls over an inch in diameter.

A represents the main frame, which may be provided with any suitable means of support, such as a table or the like, and on which a series of machines may be placed, if desired.

B is a drive-shaft carrying a pulley *b*, through which power is applied and which may be substituted by gear or other well-known connections, according to convenience, and C is a driven shaft connected with shaft B by sprocket-chain E, running over sprocket-wheels *b'* and *c'* on said shafts B and C, respectively, and over idler *d* on standard or bracket D, erected upon frame A and standing far enough above the same to give the desired elevation to idler-wheel *d*, as hereinafter more fully described.

G and H represent the two forming wheels, rolls, or rollers, and they are preferably referred to herein as "rolls" or "rollers," because they roll the ball into shape. Roller G is mounted on shaft B and roller H on shaft C and both have uniformly-grooved peripheries *g* and *h*, respectively. These grooves are segmental in cross-section in their forming portion and flared outwardly at each side outside of the said forming portion, and the two rollers are set in the same vertical plane with their peripheries directly opposite each other and in such relation as to just avoid contact at their nearest point or about as seen in Fig. 2.

Roller H is purposely larger or of greater diameter than roller G, and for this reason is the master roll or roller of the pair, dominating roller G by means of its greater peripheral speed and at last controlling the discharge of the ball or sphere O, as will be seen.

Shaft B, carrying roller G, is supported in fixed bearings on frame A, while shaft C, carrying roller H, is mounted in or upon the rocking support L, which itself is carried, preferably, on needle-point pivots *l l*, Fig. 4, or their equivalents, engaged through flanges *a* in or upon main frame A. This or any like or equivalent pivot for said rocking support L may be used, and shaft C is exclusively carried by said rocking support and has no direct connection with frame A. The said frame A is shown as having a substantially U-shaped depression or drop *a'* of about the same height as support L, while the top of

the support comes on a plane somewhat above the top of frame A and about on a level with shaft C, this bringing shafts B and C on the same level. This construction and arrangement of parts affords room for the necessary to-and-fro play or rocking movement of shaft C and roller H, as will be seen, and such play or automatic accommodation of the shaft and its roller to the work is provided for by means of a set-screw 2 at one side of said support and a spring-pressed bolt 3 on the other side. The said bolt is carried in barrel 4, in which is a spring 5, a short follower 6, and a screw 7, engaged through a stud 8 on the main frame and bearing against follower 6. By these simple means I am enabled to increase or diminish the tension of spring 5, according as more or less resistance to the backward rocking of support L is wanted, and this particular construction of details or any fair equivalent thereof may be adopted, to the end that support L, with its shaft and roller H, may automatically yield to permit the discharge of the finished ball and resume normal working position when the ball is passed.

N represents a swinging belt-tightening lever carrying an idler *n* for belt or band M, by which power is transmitted to shaft B to drive the machine.

In Fig. 6 I show a modification of the machine in which shaft C rests in bearings *c*, adapted to slide on frame A instead of resting on a rocking support, and roller-supports may be provided for these bearings if the friction be found objectionable.

Now having set forth the construction of the machine, the operation thereof will be readily understood.

It has been stated that a finished sphere or ball with a polished surface, if it be of glass, is produced by this machine and that no other or further work upon the ball is required to prepare it for the market. This result or effect is obtained through the novel and peculiar construction and arrangement of rollers G and H and the mounting of roller H especially. It is observed that the grooves in said rollers are segmental, but not semispherical in their forming portion, so that if a perfect sphere be dropped into said grooves it will find its proper resting-place where the space between the grooves is exactly proportioned to its own size, as seen in Fig. 2 and in plan, Fig. 5. At this point the curved surfaces of said grooves conform exactly to the rounded sphere; but this also leaves the edges of the two grooves apart from each other a distance double the amount that each groove is less in depth than the radius of a perfect circle in size or cross-section plus a distance determined by the distance of the ball above the central or median line of the rolls. Hence also when the said grooves come approximately together at the dead-center line between shafts B and C an oblong or oval formation results there, as clearly seen in plan, Fig. 1. Now observing these conditions and differences I have discovered that a perfect sphere can be rolled and finished at the place, and only at the place, where the two segmental grooves meet in perfectly circular outline, which is the location of ball O and which forms the mold of the machine, as will be shown further along. So, assuming that a lump or portion of prepared material has been dropped or fed into the machine, it will take its place between the rollers relatively at about the place or just above where it is to be finished and as indicated by ball O, and to facilitate operations I preferably, but not necessarily, fashion the material into something of a ball shape before feeding it to the machine. Then having the rollers and their shafts rotating at the same rate of speed in the same general direction it follows, first, that the said rollers travel in reverse directions at their point of work, and, secondly, that roller H travels proportionately faster than roller G at its periphery, as it is larger in diameter than said roller. With these conditions present and with a lump or ball of material of suitable consistency and of suitable size fed to the machine, it is rolled or fashioned into the form of a perfect sphere in the mold or pocket of the rollers above their diametrical center relatively at about the elevation occupied by ball O in Fig. 2, and experience has shown that the sphere or ball does not leave this place until it is perfectly formed, and, secondly, until it has hardened to pass down between the rolls at their otherwise closest point without endangering its shape. In this operation I have found that with two opposed segmental surfaces traveling reversely, as in this instance, and with space intervening the segments where no work can be done, the material is not rolled over and over in one direction only, as would seem probable, but the very fact that it is uneven of surface or not perfectly round to begin with causes it to engage or adhere more at one place than at another and to turn or to be turned in different directions and ways until it is equally exposed all around to the formative action of the rollers, and such turning goes on inevitably and by reason of its inequalities until at last and speedily all inequalities disappear and a perfect sphere is produced. At this time also, and especially in the manufacture of glass balls, is the ball found to be hard enough to be discharged, and the greater peripheral speed of roller H at the place of work comes into service now and the said roller itself takes charge of the ball and rolls it down and out of the machine. This action is accommodated or provided for in the rocking spring-pressed support L, and the said support and its shaft C and roller H have freedom enough to let the ball pass down and out without injury as it crosses the dia-