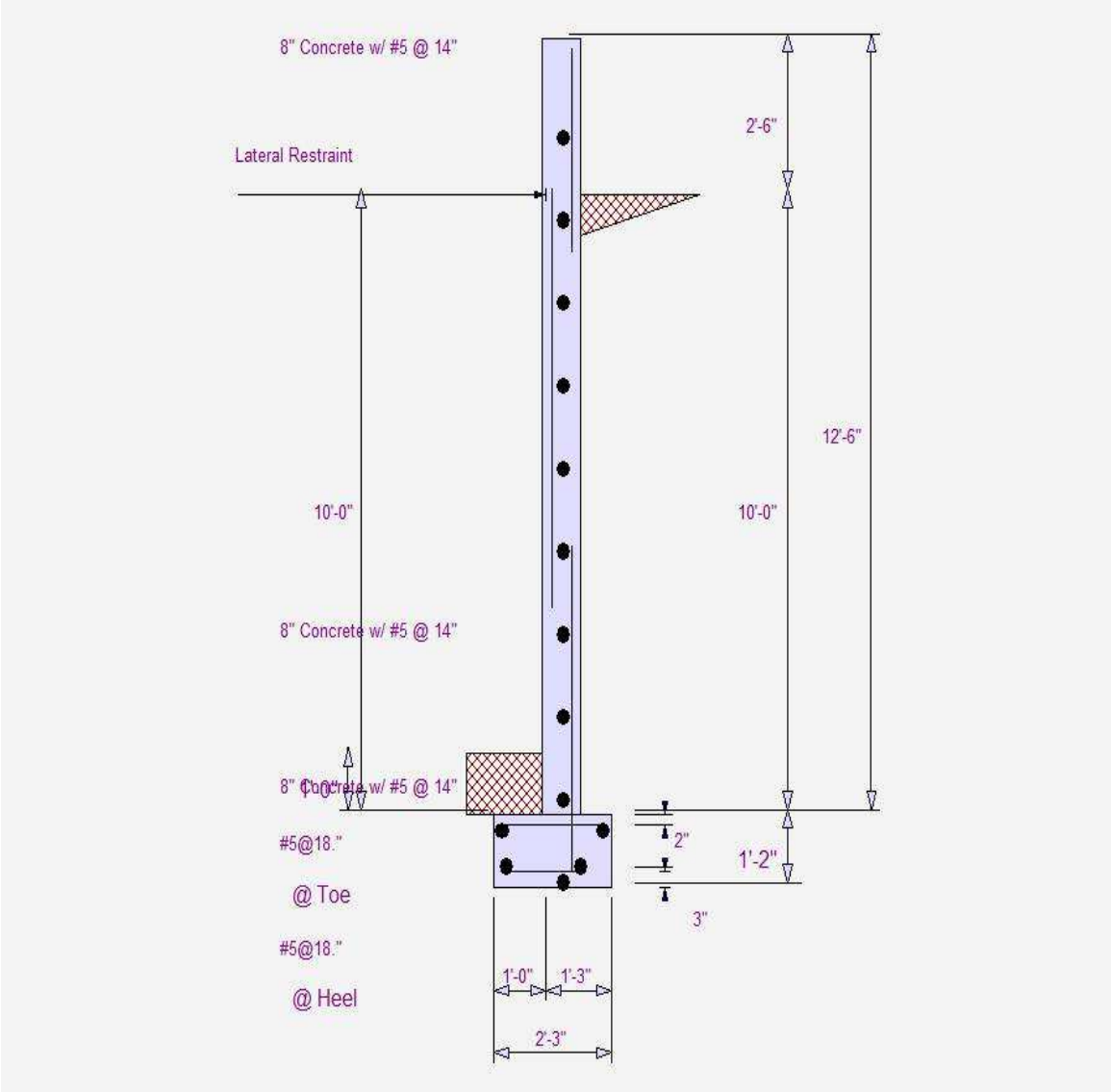
8" Concrete w/ #5 @ 14"
Lateral Restraint
2'-6"
12'-6"
10'-0"
10'-0"
8" Concrete w/ #5 @ 14"
8" Concrete w/ #5 @ 14"
2"
1'-2"
3"
#5@18."
@ Toe
#5@18."
@ Heel
1'-0"
1'-3"
2'-3"