Contents

Steel Design

Web Openings

AS4100:1998 Section 5.10.7 allows unreinforced web openings provided that the smallest dimension of the opening is $0.1*d_1$ for openings without longitudinal stiffeners and 0.33*d1 for openings with longitudinal stiffeners where d_1 is the distance between flanges.

Longitudinal and vertical stiffener plates should be added as required so the stresses within the cross-section are at acceptable limits.

Basic Detailing of web openings are:

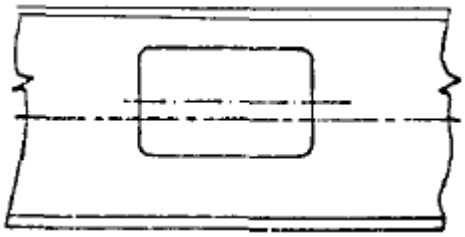

Web opening without longitudinal stiffeners

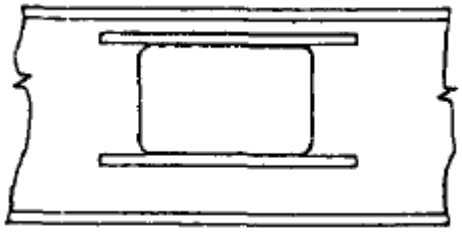

Web opening with longitudinal stiffeners

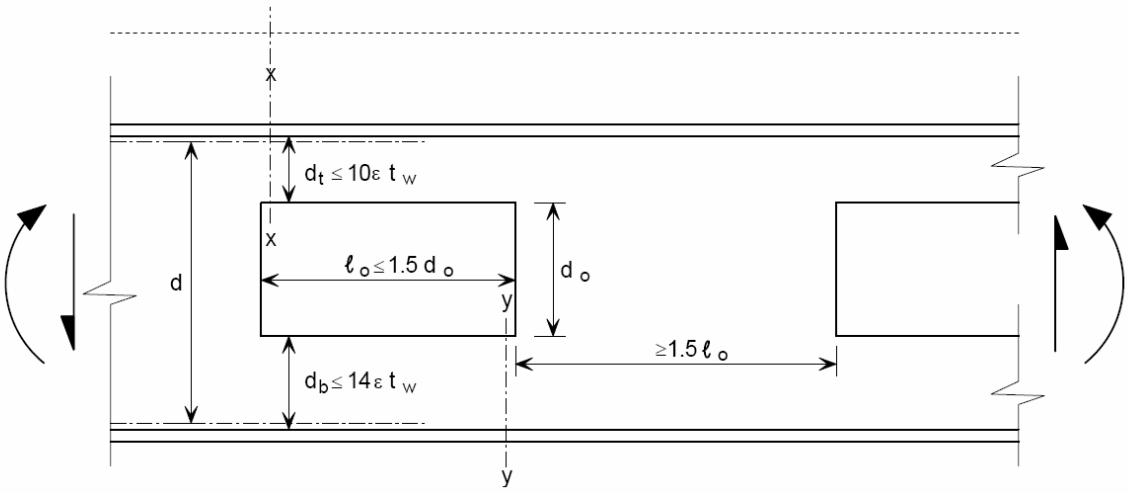

Dimension proportions for unreinforced openings

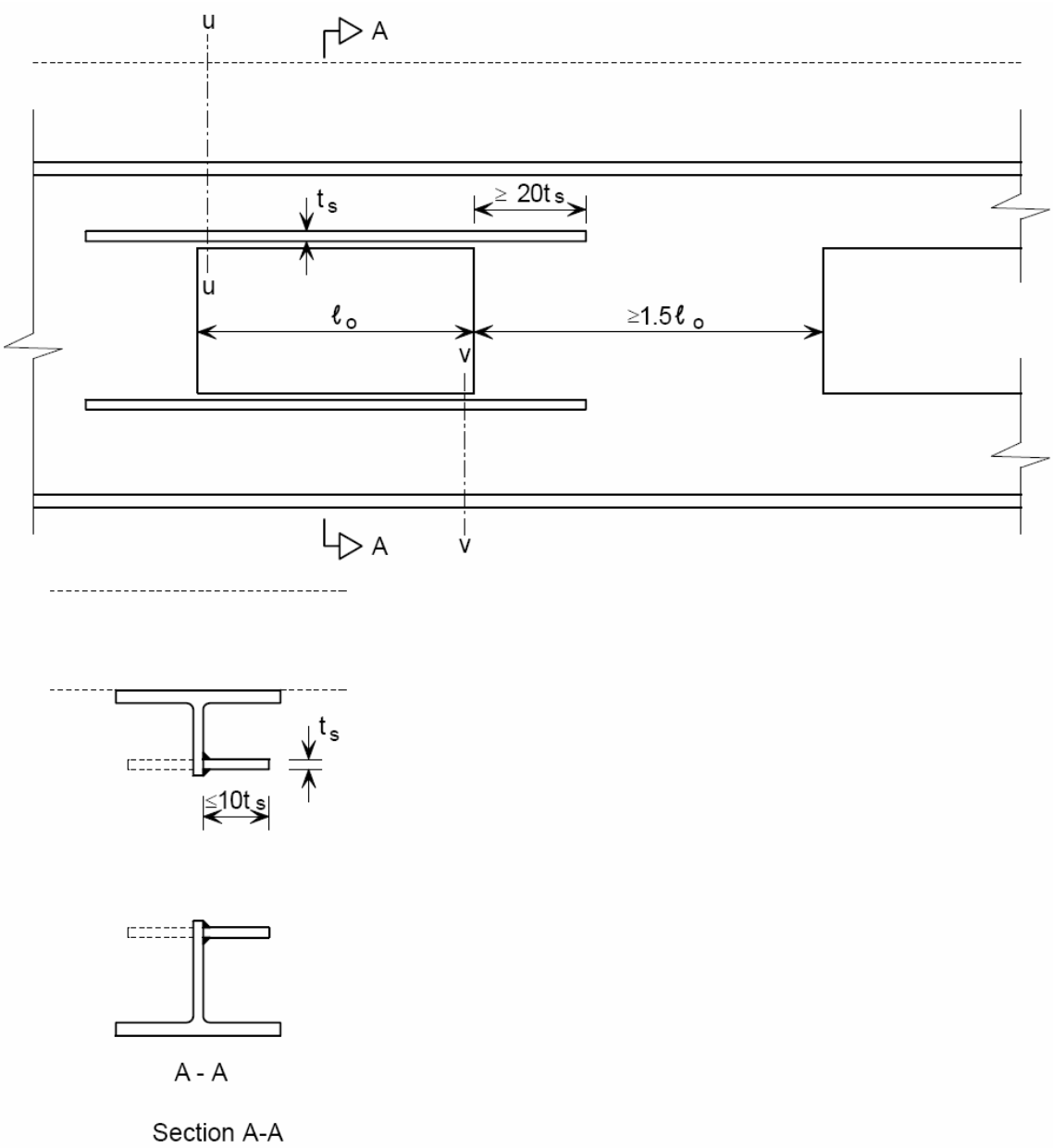

Dimensioning proportions for reinforced openings

Portal Frames

Base Stiffness

Rotational fixity at the base of portal frames can be modelled provided that the column base can transfer the moment assumed. Typically 20% of the column stiffness is assumed as a rotational spring stiffness at the base (column stiffness is 4*E*I/L).

Example: Calculate the rotational base stiffness of a 530UB82 portal frame column which has a height of 8,000mm (I_x = *477*10^6 mm*^{4}).

Base Rotational Spring Stiffness = 0.2*4*200,000*[MPa]*477*10^6*[mm^4]*/8,000*[mm]*

= 9,540 *kN-m/rad*

It is the structural engineer's responsibility to ensure that the moment restrained during from the analysis can be adequately transferred to the foundation.

For structures which are nominally pinned at the base, minor rotational fixity is only assumed for service and stability load checks where the forces transferred through the column baseplate are not at overload conditions. For ultimate limit states where the structure is being checked for stresses, no rotational fixity is assumed if the structure is nominally pinned.

Service and stability checks

Pinned Base	0.2*4*E*I/L
Rigid Base	0.9*4*E*I/L

Ultimate stresses check

Pinned Base	0
Rigid Base	Rotation Fully Restrained

Moment Connect – Knee Joint

Typical portal frame knee joint connections:

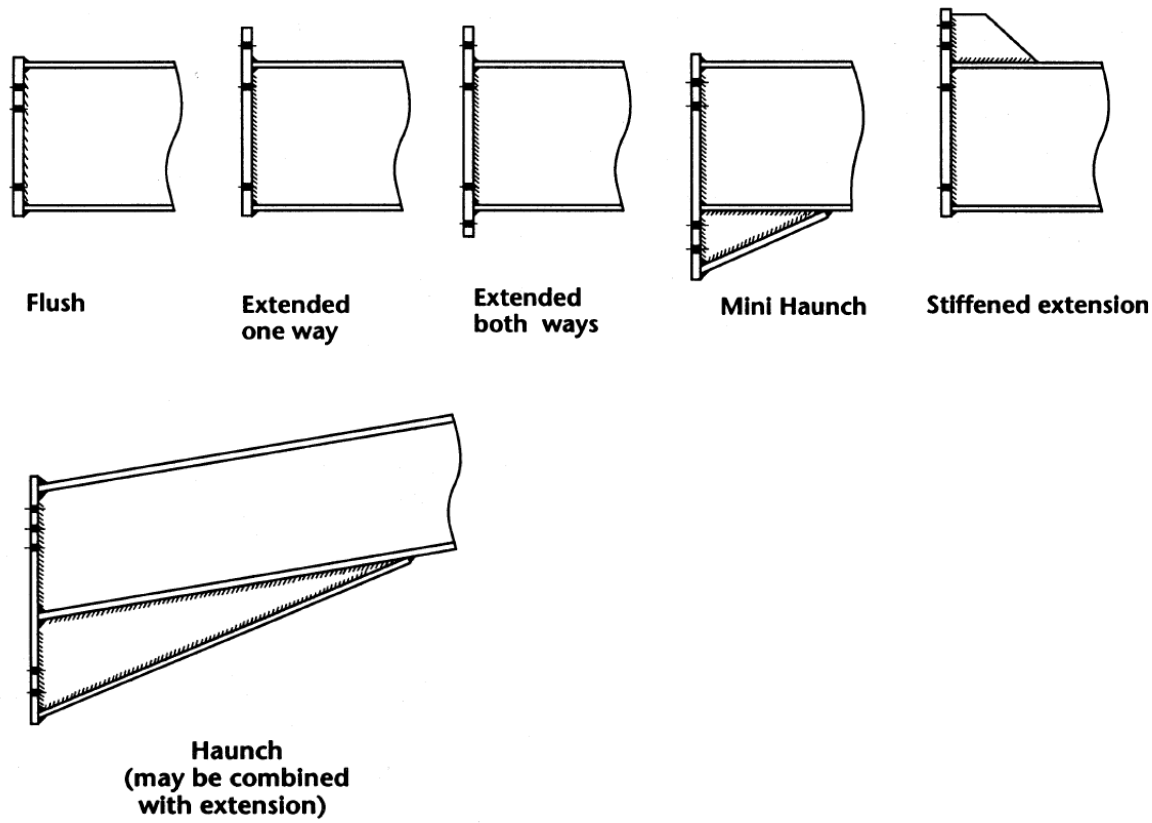

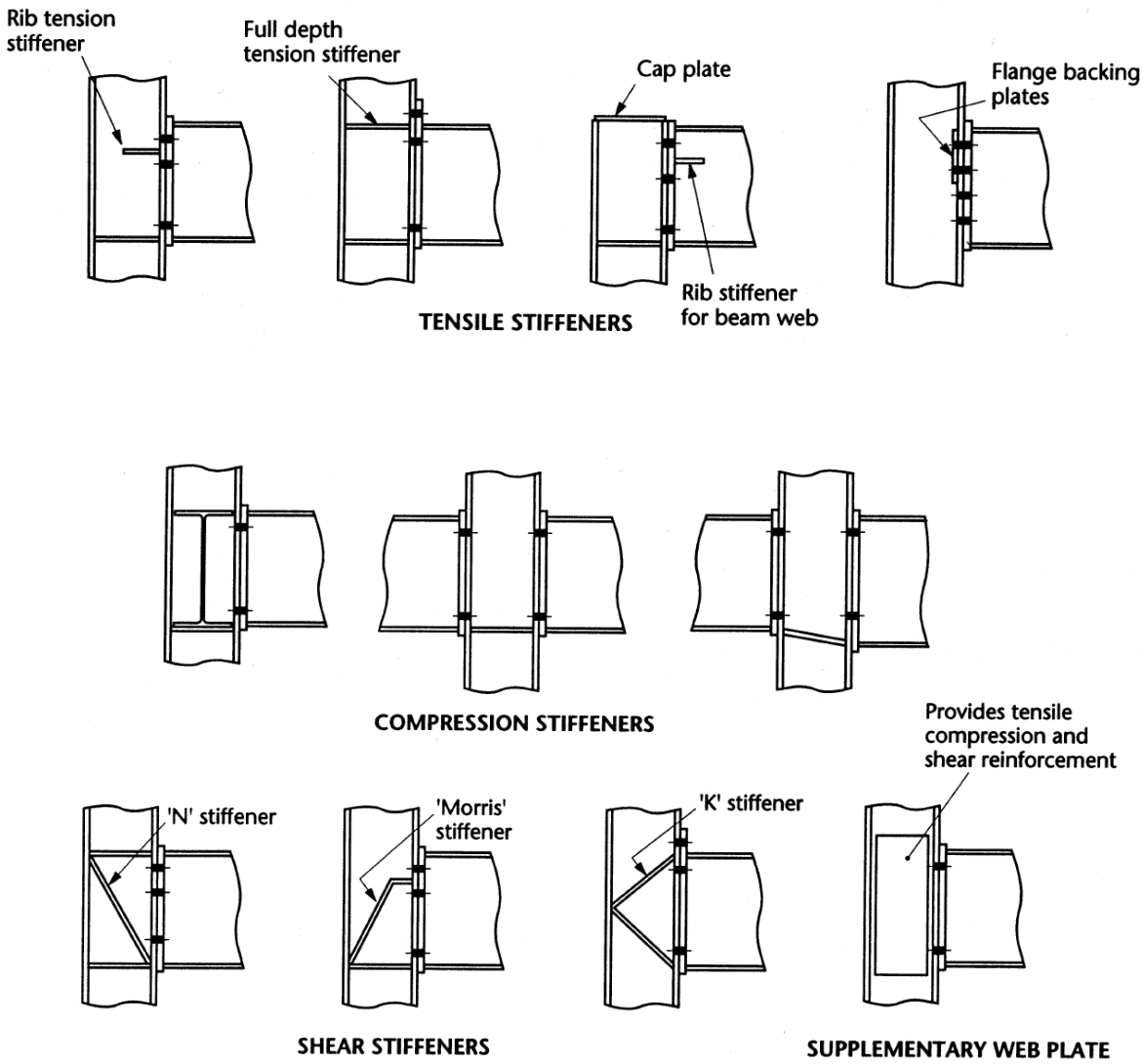

Fire Resisting for Steel

Concrete encased steel frame has a two-hour fire rating with 50mm (2”) of normal weight concrete on every face. Unsure which Australian code would deal with this.

Other fire-rating mechanisms involved drywall boxing the section. Refer to the gyprock red book for information regarding a fire-rated product.

Coating the steel with intumescent paint/spray can look like a coat of primer. Intumescent paint is a fire retardant which swells when subject to elevated temperatures and produces a insulating barrier which reduces the rate of increase of temperature for the substrate. Intumescent coatings can achieve up to two-hour fire rating. This fire-rating procedure will need to be run past the building official because it may not achieve fire-rating.

Fire-spraying the section with the fire-proofing material and then boxing the section with unrated drywall assembly.

Fire-rating will be subject to the building official.

It is highly unlikely that any fire-rating will be achievable with bare steel.

Some Prefabricated Fireproof Steel Building Columns may be available; these are standard steel sections that are encased in a fireproof material and encased in a sacrificial steel shell.

Filing a hollow section with grout can increase the fire-rating.

Section 12 of AS4100-1998 has equations on how to calculate the fire-resistance period of bare steel.

Mass effect, a heavier member will need more heat before it collapses.

Pyrocrete is sprayed on cementitious material that requires a mesh to be bonded to the steel.

A prime coat (paint) will negate the effects of a fire spray or fire paint.

Galvanizing

The most severe corrosive environment are industrial, tropical climate, temperate climate, suburban and rural.

Heavy and long columns should be field splicing, detail a splice every other floor.

Increase the size of a column so doubler plates and cover plates are not required at the web and flange to satisfy the loads.

Use shear plate connections, end-plate connections, seated connections and one sided clip connections instead of clip angles.

Ways to fabricate steel members to prepare against warping for members of unequal thickness.

Cropping for drainage.

Venting. External vent holes, internal vent holes and open end drains. Can be prepared with vent hole plugs. Non-venting steel can explode and explode out onto workers.

Flux and slag should be removed. Needs clean welds.

Do not want galavnizing for field welded shear studs, slip critical bolt surfaces and field welded splice areas. Masking materials include acid resistance high temperature tape, water-based pastes and paint on formulas, resin-based high temperature paints and high temperature greases and thread compounds.

Seal welds are required between closely spaced plates and overlapping surfaces to prevent the ingress of moisture.

Oversized holes are required for galvanizing.

Gas cut and drill holes instead of punching because hairline cracks will result from punching holes and moisture ingress will result in discoloration.

Stamped or marked welds. Do not use oil paint because it will peel of during preparation.

Touch up and repair is achieved by cold-galvanizing, involves wire brushing and paint on or spray require.

Painting

Requires surface preparation. May be solvent cleaned, blast cleaned or near-white blast cleaning.

Slip critical connection will need to be masked.

Steel Column in Soil

For steel columns that are exposed to soil it is best to galvanize the column and a plinth of impervious concrete and seal from water with silicon or bituminous paint up to the ground level. Helical piles are galvanized and perform well in soil.

Lateral Force Resisting Systems

Special Concentric Braced Frame (SCBF)

Braces shall be deployed in alternate directions such that, for either direction of force parallel to the bracing, at least 30%, but no more than 70% of the total horizontal force along that line is resisted by braced in tension.

Therefore no tension only braces are allowed in SCBF's. A single brace may need to be used but will need to be designed as a compression strut.

Sometimes 'X' bracing may interfere with windows or doors.

Torsion

Torsion in open shapes will cause warping which results in stresses that are additive to the bending stresses. Good references for torsion include the AISC design guide for torsion and Salmon and Johnson.

Design of Webs

Web Yielding

Web Crippling

Compression Buckling

Concrete Design

Punching Shear

Drop Panels

Correctly dimensioned drop panels will be L/6 to either side of the column for relatively square column grids. For rectangular column grids, a band system would be more economical.

Studrails

Studrails are manufactured by Dencon and Nelson's in the U.S and Reids and Ancon in Australia. To develop full yield strength of the studs, an anchor head is welded to a steel base rail. The steel anchor head must be at least 10 times the cross-sectional area of the stud stem to be fully developed.

Studrails are seen in post-tensioned flat slab construction.

British Concrete Standards limits the total shear stress at a slab-column joint to 2*Vuc.

Reids Studrails correct detailing for punching shear reinforcement

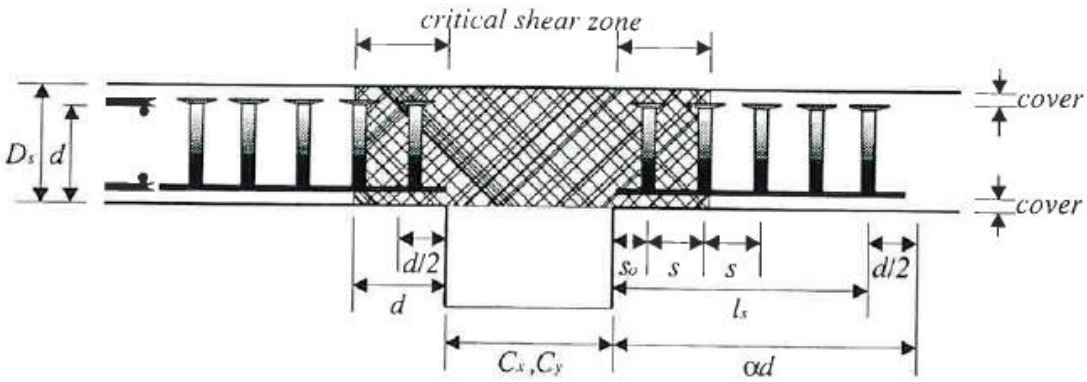

The first studrail must be located within 0.25*d to 0.5*d from the column face, the recommended spacing is 0.35*d. Successive studs must be spaced at less than the slab thickness (that is spacing <= D) however closer spacing improves the ductility and strength of the slab. Optimal spacing is 0.5*d to 0.75*D. In severe seismic locations, the spacings (s) should be limited to 0.5*d with the first stud to be located 0.35*d from the column face. The last stud should be located greater than 2.5*d from the column face, ideally 2.5*d to 3*d.

Studrails are typically located around the column face in the direction of the torsion strip.

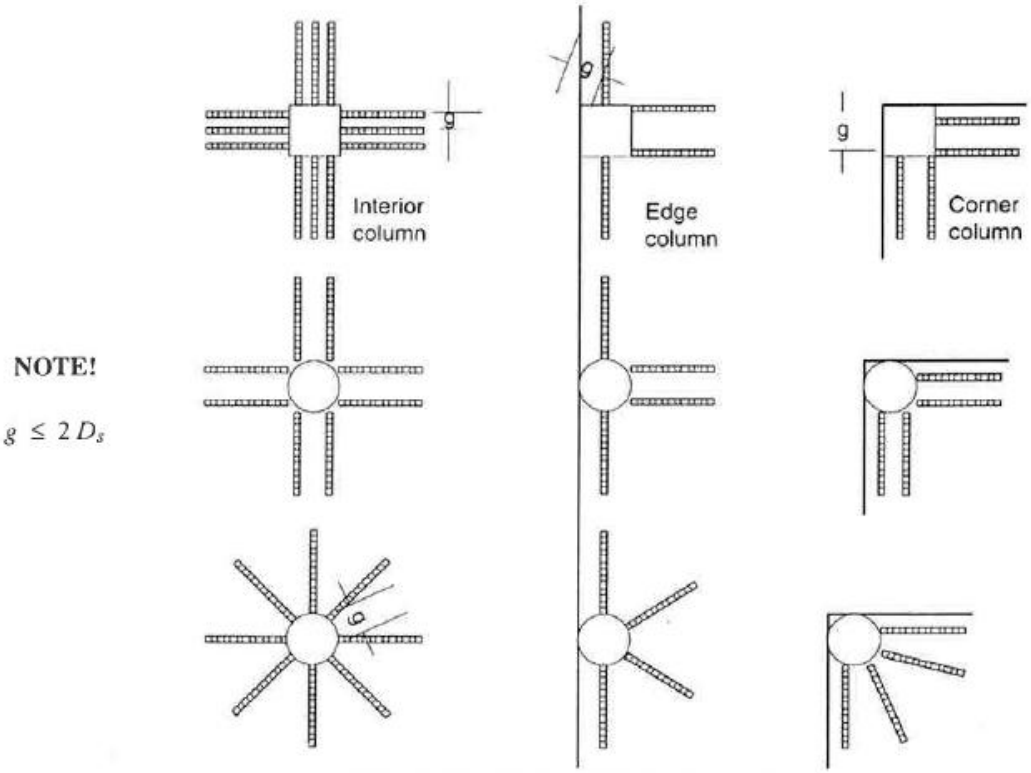

Typical arrangements of Studrails around columns

Column Capitals

Analysis of Concrete Structures

The torsional stiffness of concrete needs to be accounted for when analysing beams. The torsion constant (J) of a rectangular cross-section can be estimated by J=β*x*y^3 where x is the dimension of the long side and y is the dimension of the short side. β varies with the ratio of x/y and is given in the following table:

x/y	β
1.0	0.141
1.5	0.196
2.0	0.229
2.5	0.249
3.0	0.263
4.0	0.281
5.0	0.291
6.0	0.299
10.0	0.312
∞	0.333

Or likewise, the torsion constant can be estimated by the equation:

J=x*y^3*(1/3-0.21*y/x*(1-y^4/(12*a^4)))

The torsional stiffness of reinforced concrete should be reduced by 90% to account for the rapid decline in stiffness that results from cracking.

For example, consider a 900 wide by 300 deep edge beam. The torsional stiffness of the rectangular section would be:

J=900*300^3*(1/3-0.21*300/900*(1-300^4/(12*900^4)))

J=6.45*10^9 mm^4

To account for cracking, the torsional stiffness is multiplied by 0.1. So the torsion constant of the edge beam becomes 6.45*10^8 mm^4.

Concrete Subject to Fire

The most common affect that fire or elevated temperatures has on concrete is spalling due to the moisture expansion in the pores and carbonation of the surface usually to a depth of less than 4mm (1/8”).

Slabs on Ground

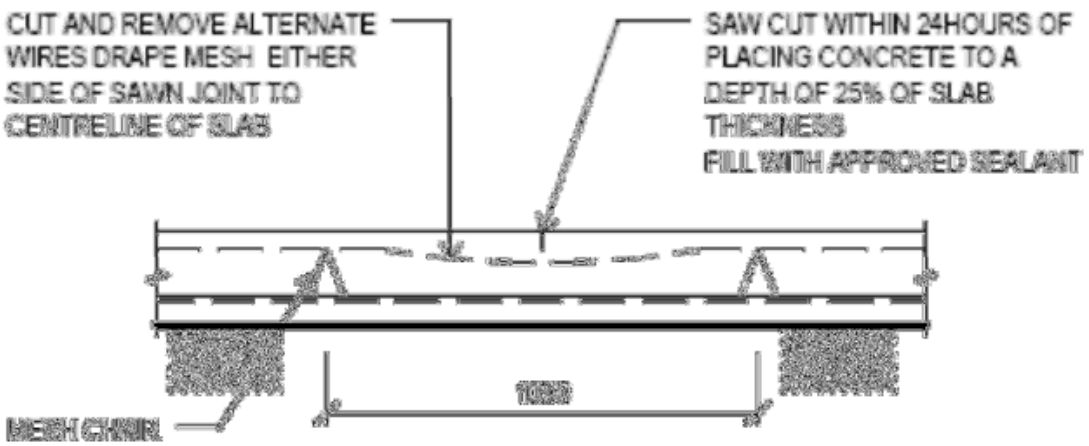

SAWN JOINT DETAIL (SJ)

1 : 20

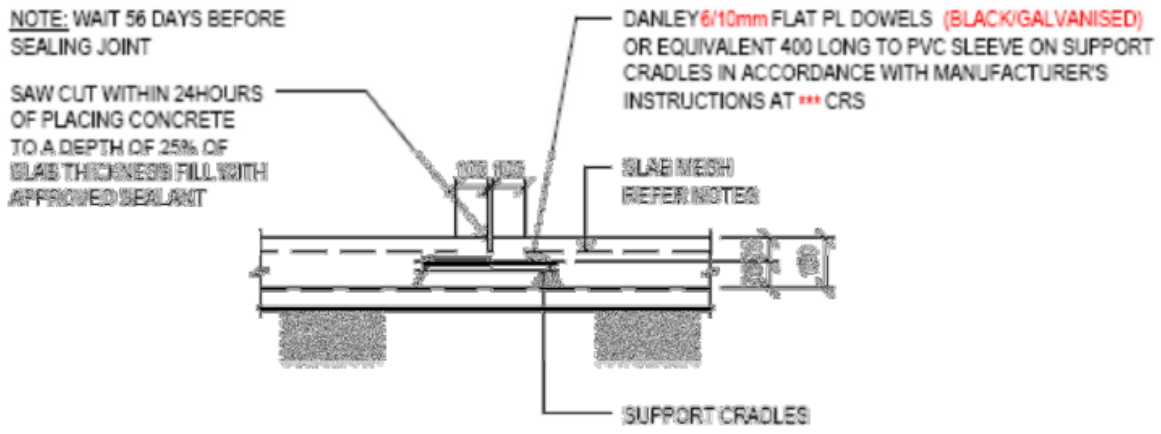

DOWEL JOINT WITH SAWCUT DETAIL (SDJ)

1:20

Dowelling every joint will cause restraint at intersecting joints.

Saw-cutting must occur as soon as the slab permits, 12-24 hours after pouring the slab.

50 percent of the steel should cross a saw joint (i.e. cutting every second bar).

External joints will need to be sealed but internal joints don't need to be sealed.

If the dowels are not normal to the joint than restraint is created and the dowels become ineffective.

50mm (2") cover top and sawcut to a depth of 40mm (1-1/2"). For a 200 thick slab (8") then use 60mm cover (2-1/2") and sawcut to 50mm (2"). 6 meters is a good joint spacing.

If joints are cut too early, the concrete may not have attained sufficient strength to support the equipment and damage may occur to the slab. Also, ravelling along the joint may cause spalling at the joint location.

If the joints are cut too late then, uncontrolled random cracking may occur in the slab.

Soff cut Saw

Soff cut saws can be used within 1-2 hours of pouring the slab and can prevent the appearance of random cracking. Soff cut Ultra Early Entry are sawn in the green zone (within the first two hours of pouring the concrete). A system has been developed that allows pressure to be applied to the surface while preventing chipping and spalling, more effectively preventing control of shrinkage cracking.

Super Flat Slabs

Look at www.jointfreeslabs.com when designing slabs where no joints are allowed. Post-tensioned slabs on ground may also be an option when joint free slabs on ground are requested. Will require the slab to be moist cured for as long as possible, preferably 28 days. Need to make sure there is not vapour barrier directly under the slab. Reinforcing the slab with Type K cement and moist curing the slab will reduce the potential for slab curling.

Type K Cement

Anchor Bolt Design

Headed anchor bolt.

Concrete Cracking

Most concrete cracking is caused by drying shrinkage and most will not have a detrimental effect on the structure apart from letting water through to corrode the reinforcement.

Cracks that occur at the bottom of the midspan are sometimes flexural cracks, but it is also a point where shrinkage cracks develop as well.

Cracks are generally wider at the surface than below the surface. If the crack is less than 1mm (1/32”) it is not a problem unless they are closely spaced, diagonal and near the end of a beam (shear cracks).

For concrete slabs that have been placed on metal decks, to prevent cracking the primary top steel needs to be placed in the 4th layer. Possible differential settlement of the deck while the concrete is

placed will result in the slab being thinnest over supports and a logical place for a shrinkage crack to occur.

Masonry Design

General Masonry Design Principles

Wall Ties

True masonry vaneers will have an air space or insulation between the vaneer and the structural back-up. Wall ties provide the horizontal resistance to transfer the horizontal loads to the structure.

Shelf Angle

Shelf angles allow the clay brick masonry to expand with time and articulate from the timber/concrete frame.

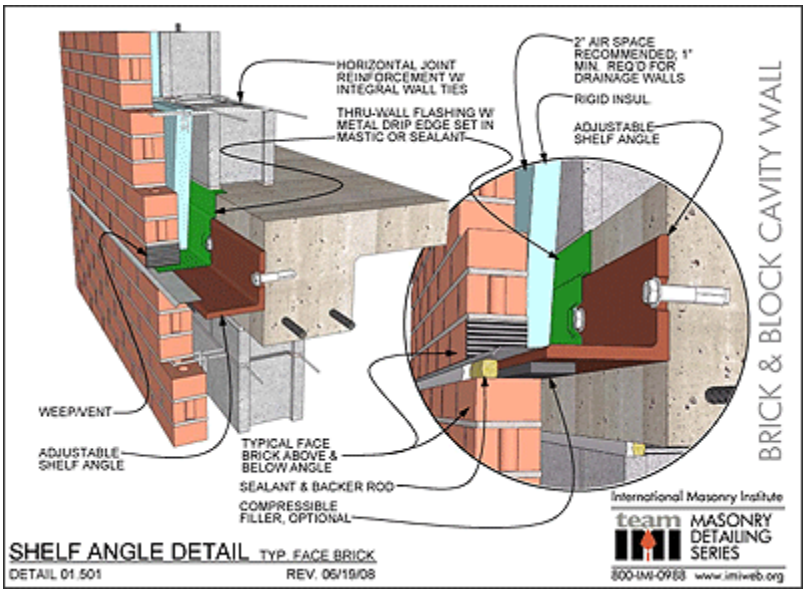

Control Joints

The engineer is responsible for calling up control joints in bearing walls while the architect is responsible for calling up control joints for vaneer walls.

Brick Design

General Principles

Clays bricks will swell upon wetting therefore requiring and expansion joint.

Concrete Masonry Design

General Principles

Control joints should be placed every 6-8 metres. Only 12 courses of block can be laided at any one time, so a 4800 high wall will need to be constructed as the first 12 courses, followed by 3 days to allow the grout to cure before construction can commence on the remaining 12 courses.

Steel Lintels

A lintel supports masonry over an opening such as a door or a window. Take account the arching of the brick or block from the support points.

Such architectural patterns like stack bond or solider courses will have an effect on the arch stability and lateral thrust as will the location of the control joints. If there is insufficient masonry either side of the opening to resist the lateral thrust than arch action cannot be assumed.

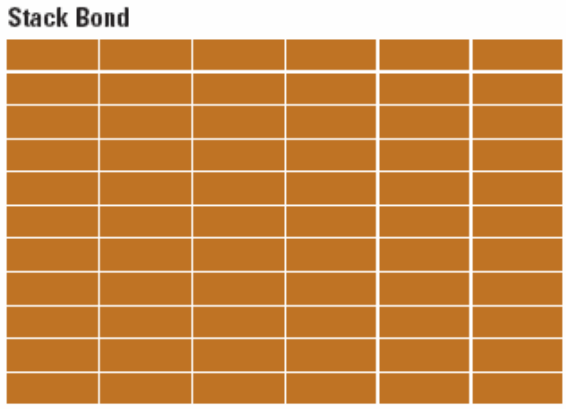

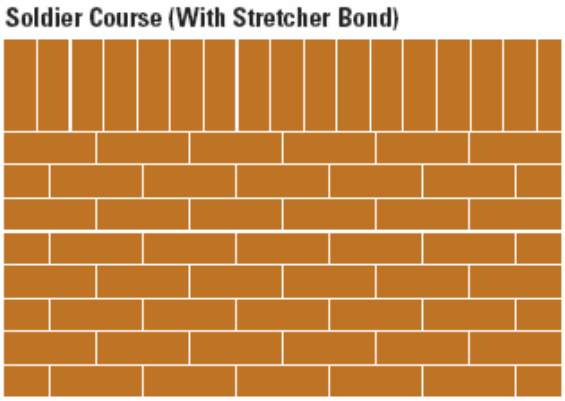

Timber

Floor Details

The shear stress for an un-notched solid rectangular section parallel to the grain shall be limited so that τ=3*Fv/(2*b*h)<=τadm (modified appropriately for k-factors), where τ is the shear parallel to the grain, Fv is the vertical external shear and b and h are the widths and depth of the rectangular section being considered. This equation is a re-arrangment of τ=V*Q/(I*t).

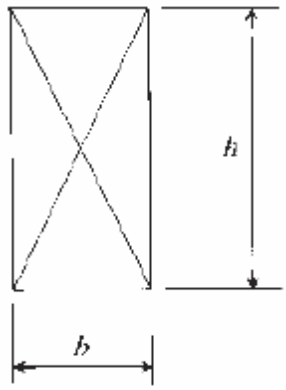

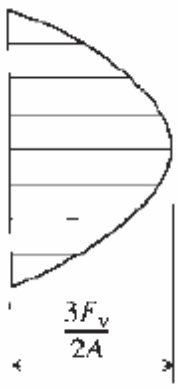

For example, a rectangular timber beam (90x190) spanning 2000mm with a load width of 600mm with a design load of 5kPa will have a vertical shear at the supports of 5kPa*2m/2*0.6m=3kN. So the maximum horizontal shear stress will be τ=3*3000N/(2*90mm*190mm)=0.263MPa.

The equations can be re-arranged so to give a maximum design shear force by Fv=2/3*A*τadm.

Notched Beam

Consider using joists hangers before beams are notched.

Can be used for floor designs. Example is a 4x8” (90x190) joists spanning both sides onto a 6x12” (140x290) beam . The floor joists would have a notch of in the bottom edge of 1-1/2 x 2” deep (35x50), reducing the effective cross-section to 3-1/2x5-1/2” (90x140). While the 6x12” beam will be notched 1-1/2x5-3/8” to accept the floor joists.

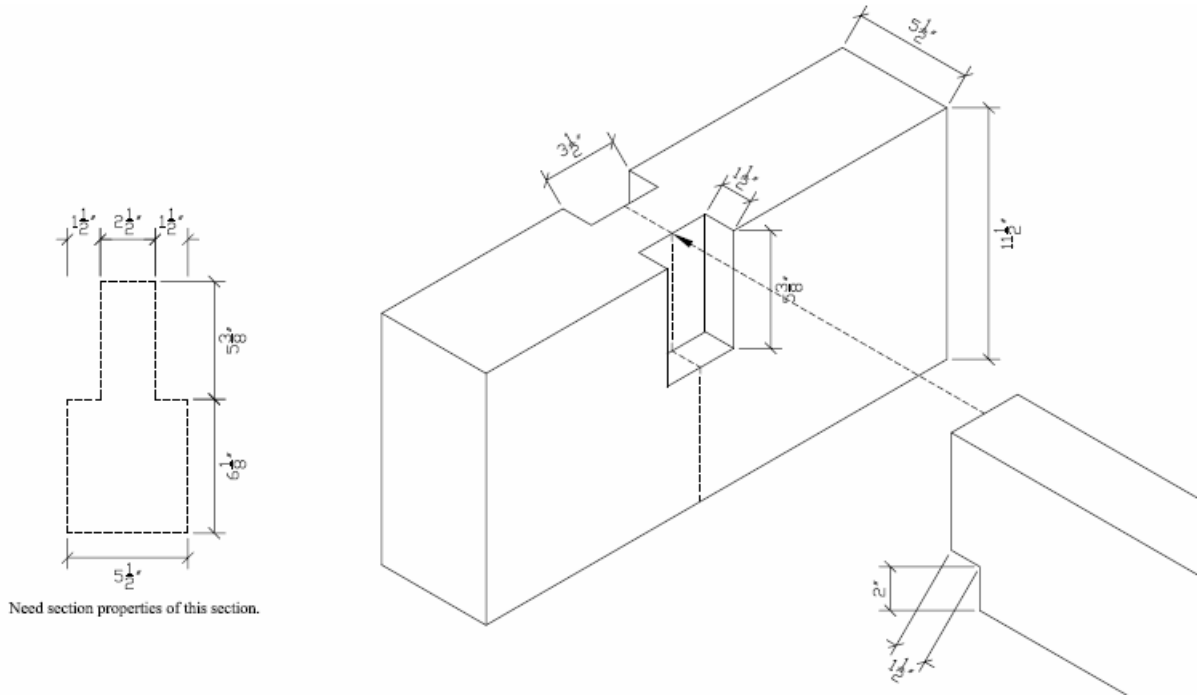

Notching can affect the shear stresses at the supported ends of beams where the shear stresses are high. To account for this, modification factors are made for the effects of notching. When the notch is on the lower edge of the beam, a modification factor of he/h is made to the allowable shear stress, while the shear stress becomes 3*Fv/(2*b*he). When a notch is on the top edge of the beam, the modification factor becomes (h*(he-a)+a*he)/he^2 when a<=he and no modification is made when a>he,

Ledger

A ledge is a timber member that runs parallel to a wall and fixed to it by expansion anchors or a simpson strong-tie system that picks up floor joists running perpendicular to it.

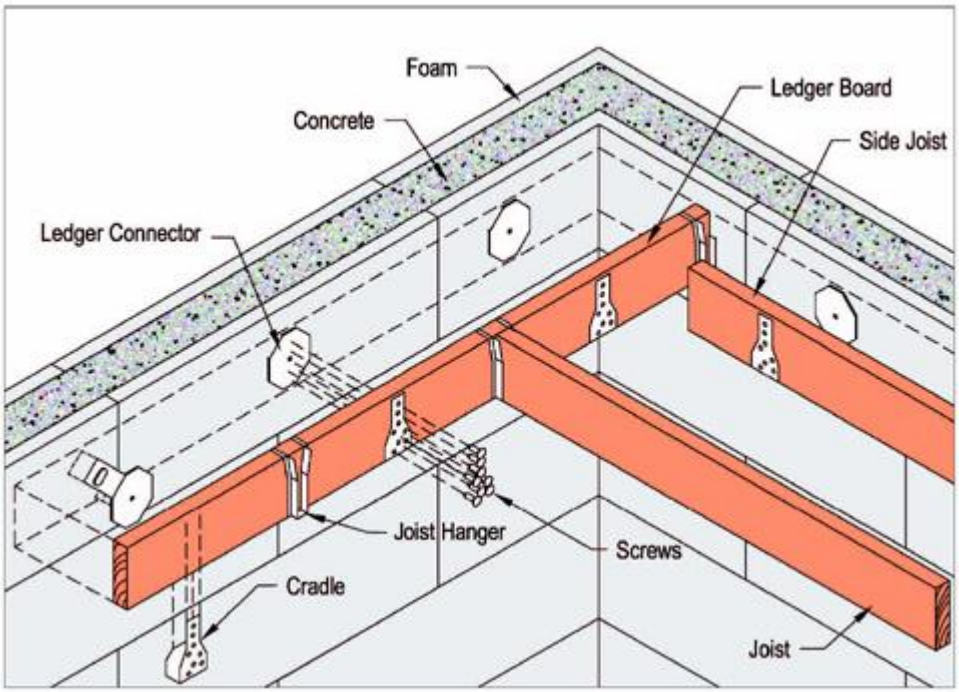

Bridge

Prestressed Concrete Deck Units

Stress Limits

The first step in the design of highway bridges is to design the deck unit for stressing. This requires detailing the deck unit or bridge girder so that the stresses at the extremes of the cross-section are within limits set. General tensile and compressive limits are summarised in the following table:

Type of Stress	Stress Limit
Compressive	0.5 to 0.6*f'c
Tensile	-0.25*sqrt(f'c)

These limits ensure that there is adequate factor of safety between the stresses induced and the crushing and rupture limits of the concrete.

Critical stress will occur at the end of the transmission length for each de-bonding section.

Typically for 12.7mm diameter low-relaxation strand with a 1,860MPa bread strength, the losses experienced at transfer will be approximately 150MPa while the total losses with be approximately 240MPa.

Prestressing Tendon Transmission Length

Table 13.3.2 of AS3600-2001 states that the transmission length for regular prestressing tendons is 60*db. Research for the transmission length has shown these values to be fairly accurate.

Tendon Size	Transmission Length
12.7mm dia	762mm
15.3mm dia	912mm

Young's Modulus of Concrete

AS3600-2001 defines the Modulus of Elasticity of Concrete to be ρ^1.5*0.043*sqrt(fcm) where ρ is the density of the concrete (normally assumed to be 2,400kg/m^3) and fcm is the mean compressive strength of the concrete which is taken to be slightly higher than the characteristic compressive strength of the concrete (f'c).

For high early strength concrete, this equation has shown to overestimate the value of the Young's modulus of concrete, particularly considering that the calculations for deflections and losses within the first four months of the unit being cast are critical. The American Concrete Institute committee for High Strength Concrete (ACI-363) have proposed the following equation for the calculation of Young's Modulus for high strength concrete as 3,320*sqrt(f'c)+6,900. This equation should be adopted for the camber, shortening and losses calculations.

Concrete Strength	AS3600-2001	ACI-363
32 MPa	28,600 MPa	25,680 MPa
40 MPa	31,975 MPa	27,900 MPa
50 MPa	35,750 MPa	30,380 MPa

Creep and Shrinkage Models

There are many factors that affect the creep and shrinkage of concrete. Creep for example would be affected by the relative humidity that the concrete unit is commonly exposed and the age of the concrete when the element is first loaded, a concrete element loaded at an earlier age will deform more from creep than a unit that is loaded after 7 days. While shrinkage will be dependent on any local admixtures that are used in batching the concrete as well as average exposed humidity. There are many different creep models that can be used that are a function on one or more of the variables that are listed above, however, in-lieu of more specific testing the general creep and shrinkage models that are given in AS3600-2001 are assumed.

Structural Dynamics

Floor Vibrations

Floor vibrations should be within 6.3 to 10.6 hertz (hz), more strict vibration criteria is towards the higher end (10.6hz). Easiest way to stiffen a floor for vibrations is to add columns and generally stiffening the structure.

Wind

During major events, the leeward wall should be open. Otherwise the internal pressures will attempt to blow the windows out.

Interal Pressures

The American wind code is very simplified, saying that a building is either partially enclosed (Cpi=+/-0.55) or fully enclosed (Cpi=+/-0.18). The Australian code is a more detailed procedure where the size of the dominant opening (roller shutter doors or similar) on each wall and then the effective area of leakage on each wall and roof (taken as 0.05% of the surface area for industrial buildings and 0.001% for sealed buildings).

The effective internal pressure depends on which wall the dominant opening is on. For example, a dominant opening on the windward wall will result in an positive internal pressure while a dominant opening in the leeward wall will result in a negative internal pressure.

The ratio of the area of the openings compared to the total amount of leakage, a large ratio will result in an internal pressure equal to the external pressure of the wall which the dominant opening is on. Whereas a dominant opening which is not as effective will not develop the full pressures of the wall which the dominant opening is on.

Buckling Analysis

A buckling analysis of a steel frame will be greatly influenced by the restraints modelled.

Foundations

Micro Piles/Pin Piles

Micro piles and pin piles are synomous. An example of a micro-pile is a 3” (75mm) pin piles. AASHTO require a deduction of 1.6mm from the shell thickness for “sacrificial” steel loss. Best suited for non-aggressive environments (5.5<pH<10; Sulphates <200ppm; Chlorides<100ppm and no chemicals which are contaminating the land).

Bells Piers

Belled piers are hardly effective but they can be used in expansive soils. The bell is somewhere between two and three times the pier diameter. The bell will need to be hand dug and is used for piers up to 20’ deep (6000mm). The shaft of the pile can be susceptible to cave in particularly when it becomes shallow. Bells are dugout be special drill cans.

Allowable Bearing Capacity

Allowable bearing capacity generally relates to the bearing capacity which limits an amount of settlement (say 10mm or ½”). There is a generic relationship between allowable bearing capacity and modulus of subgrade reaction.

Composite Design

Composite Steel Design

A W8 (200UB) beam is very small and should be avoided in composite design. The studs need to be a minimum of 2.5 times the flange thickness unless they are welded over the web.