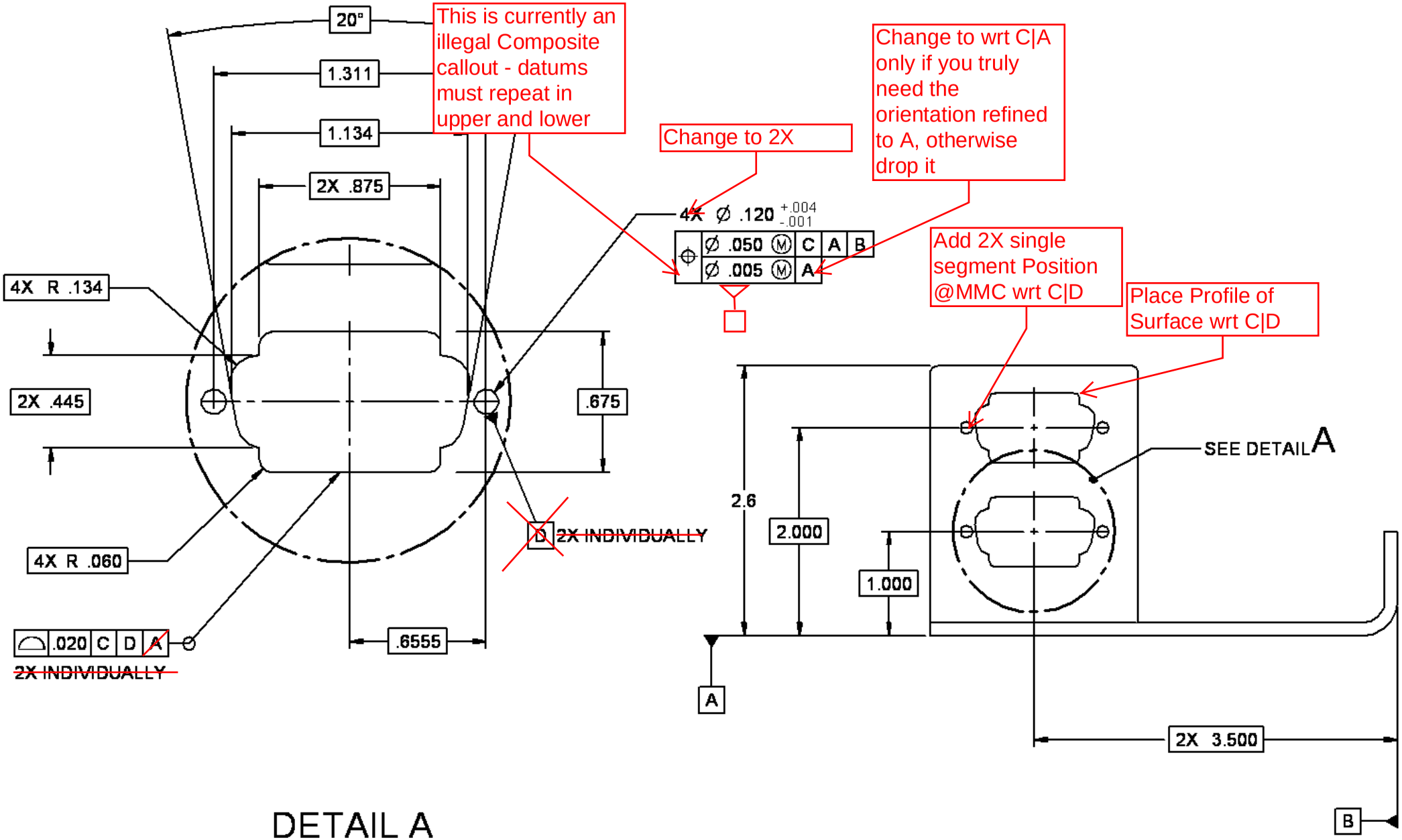

DETAIL A

2X - BASIC Dims ONLY