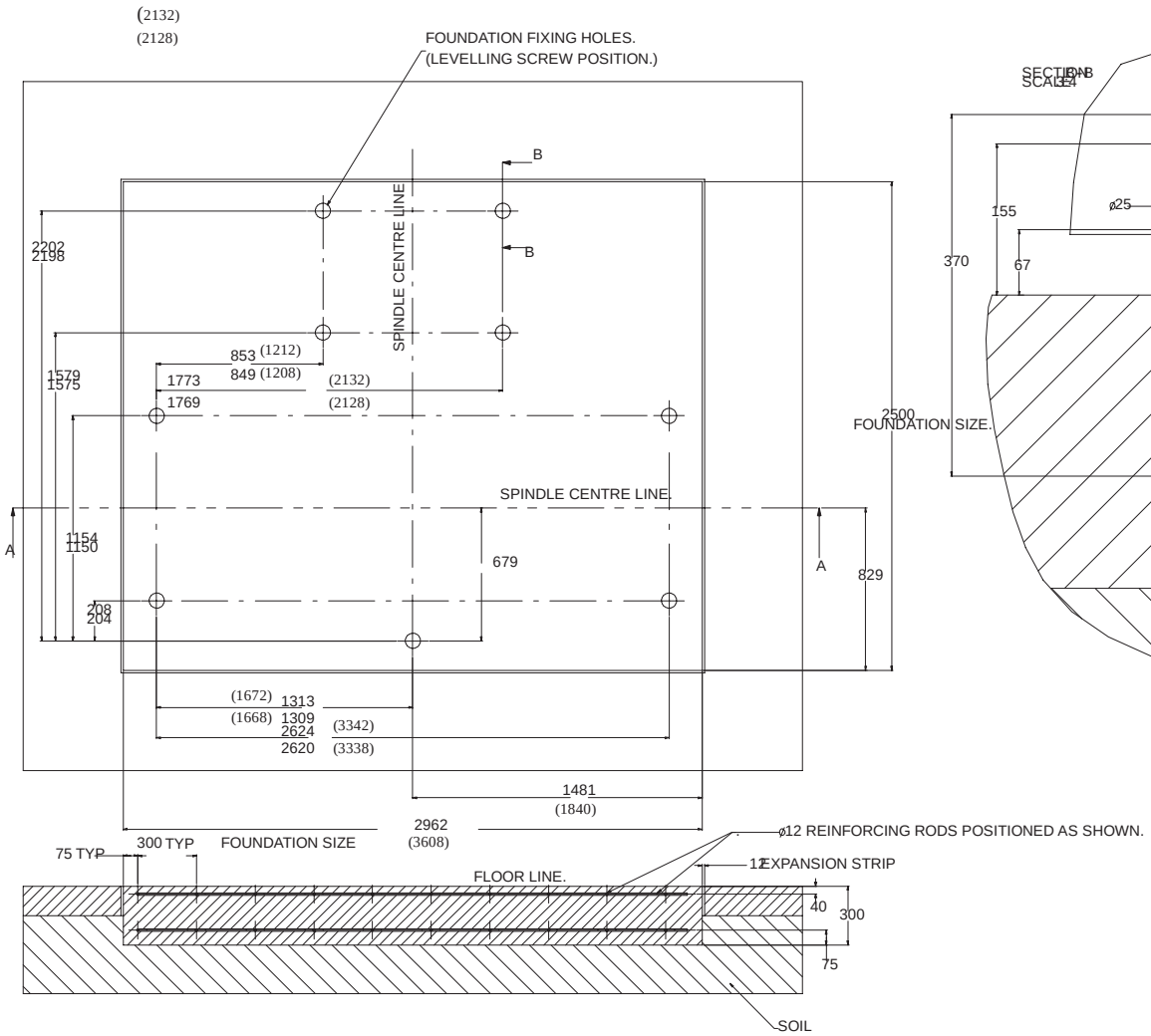

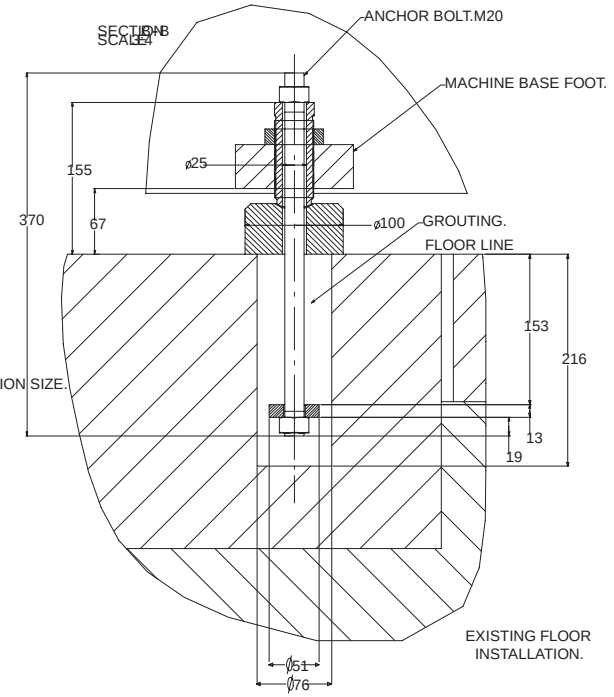

GENERAL NOTES.

FLOOR LOADING ON 9 POINTS AS SHOWN ABOVE.
FLOOR CONSTRUCTION.
CUSTOMERS FLOOR TO BE IN A SOUND UNCRACKED CONDITION WITH A EQUIVALENT SPECIFICATION TO THE FOLLOWING.-
CONCRETE TO BE 20mm MAXIMUM AGGREGATE SIZE WITH A MINIMUM COMPRESSIVE STRENGTH,AFTER 28 DAYS,OF 25×10^6 N/M/M .
MINIMUM CEMENT CONTENT OF CONCRETE TO BE 290Kg/m .
GROUT,IF USED,TO BE NON METALIC,NON SHRINK TYPE WITH A MINIMUM COMPRESSIVE STRENGTH AFTER 28 DAYS OF 55×10^6 N/M .GROUT TO BE MIXED AND PLACED ACCORDING TO MANUFACTURERS RECOMMENDATIONS.
TOP SURFACE OF FOUNDATION TO BE WITHIN 3mm OF A LEVEL PLANE.

NOTE -
THIS DRAWING SHOWS MINIMUM FOUNDATION REQUIREMENTS AND IS SUITABLE WHERE THE SOIL HAS A LOAD CARRYING CAPACITY OF NOT LESS THAN 50×10^3 N/M .
CUSTOMERS ARE ADVISED TO REFER TO A CONSULTING STRUCTURAL ENGINEER FAMILIAR WITH LOCAL CODES AND SOIL CONDITIONS.