Radial width of annular plate at any point around the circumference of the tank shall be either Aw1 or Aw2, whichever is greater

Aw1= X + t + Y + L

where, X = 24 " or as per Appendix E.4.2 X=0.0274 W_L/GH whichever is greater

t = Provided thickness of the lowest course

Y = Projection of annular plate outside the shell

L = Annular-sketch plate lap

W_L = Weight of tank contents

Aw2= 390 t_b/ $(HG)^{0.5}$

where, t_b = Thickness of the annular plate

Nominal Plate Thickness[a] of First Shell Course (in.)	Hydrostatic Test Stress[c] in First Shell Course (lbf/in^2)			
	≤ 27,000	≤ 30,000	≤ 33,000	≤ 36,000
$t \le 0.75$	1/4	1/4	9/32	11/32
$0.75 < t \le 1.00$	1/4	9/32	3/8	7/16
$1.00 < t \le 1.25$	1/4	11/32	15/32	9/16
$1.25 < t \le 1.50$	5/16	7/16	9/16	11/16
$1.50 < t \le 1.75$	11/32	1/2	5/8	3/4

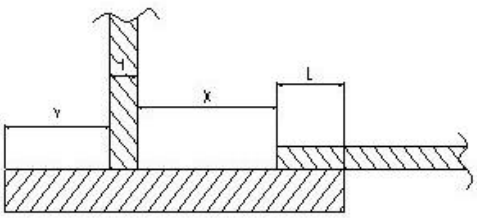

AW1=X+t+Y+L

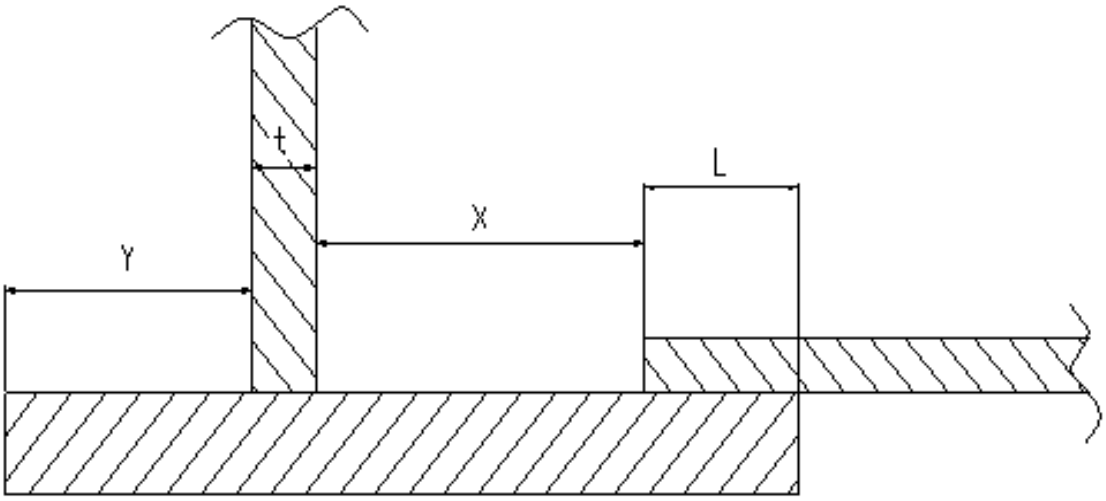

AW1=X+t+Y+L