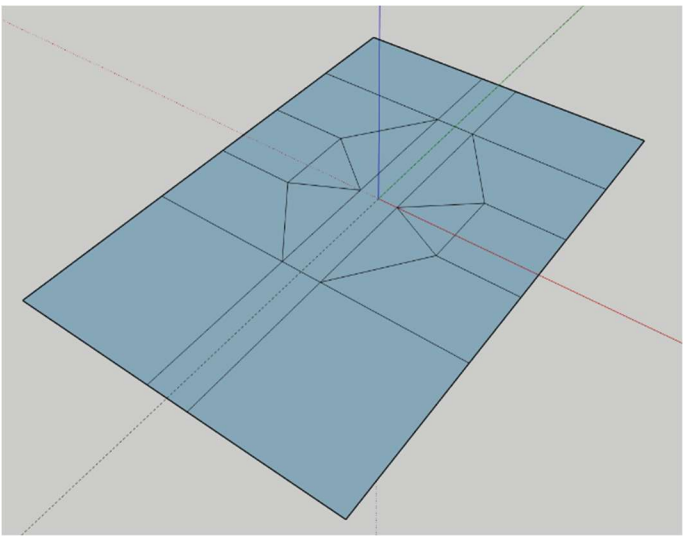

Yield Line Mechanism

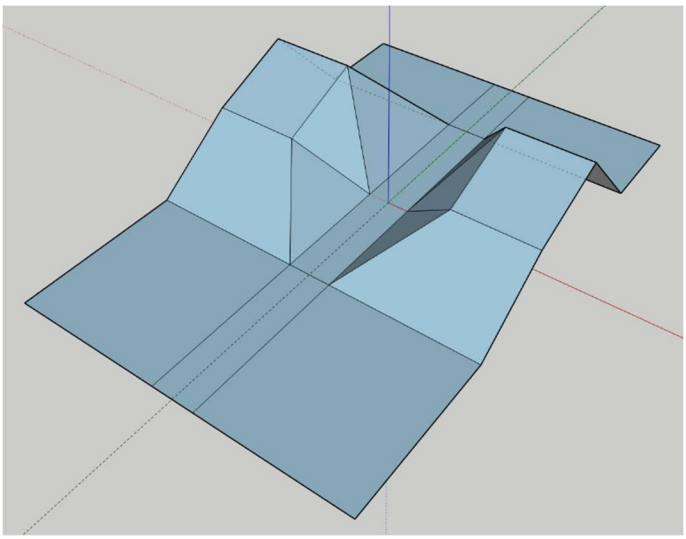

Yield Line Mechanism (Deformation from Virtual Rotation)

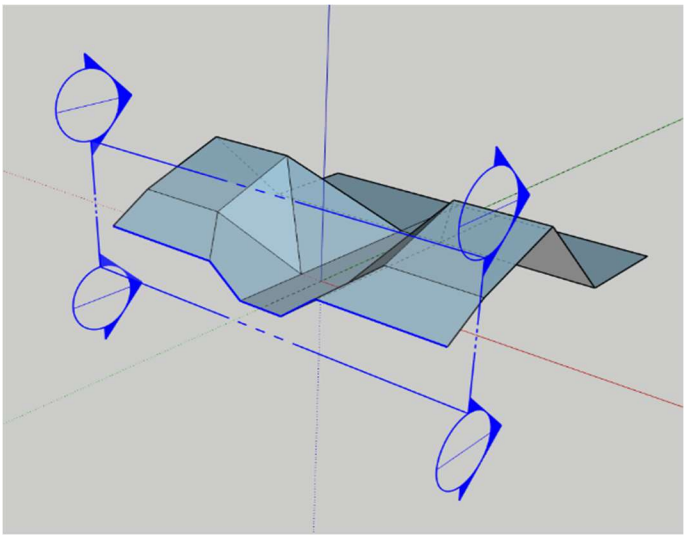

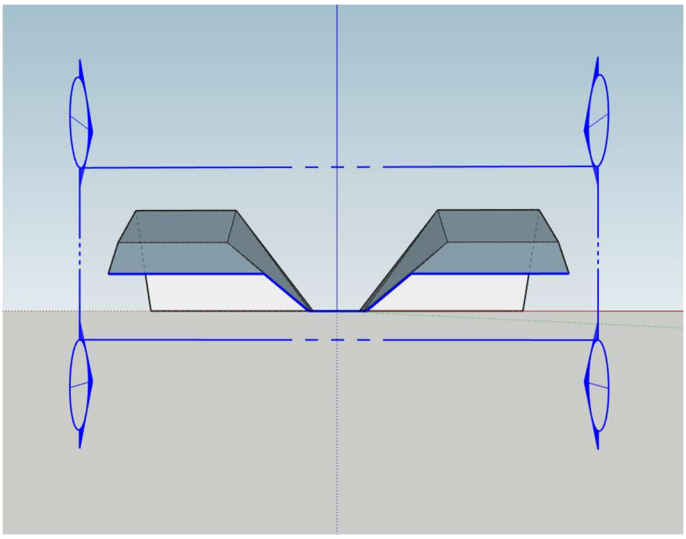

Section Cut (Below Lower Bolts)

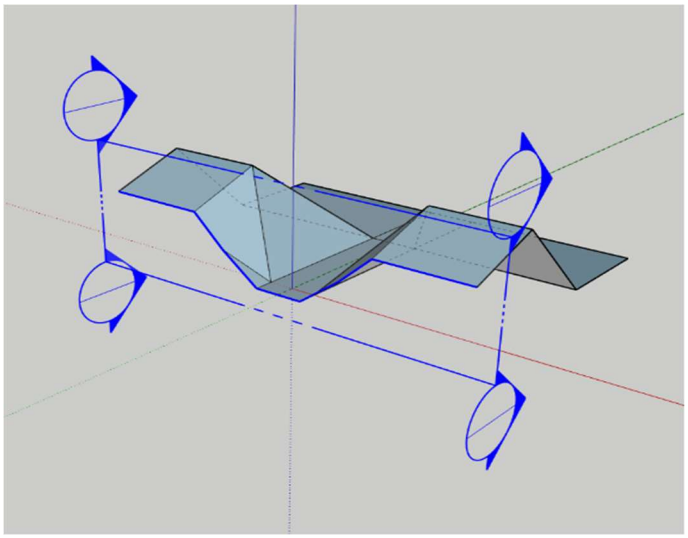

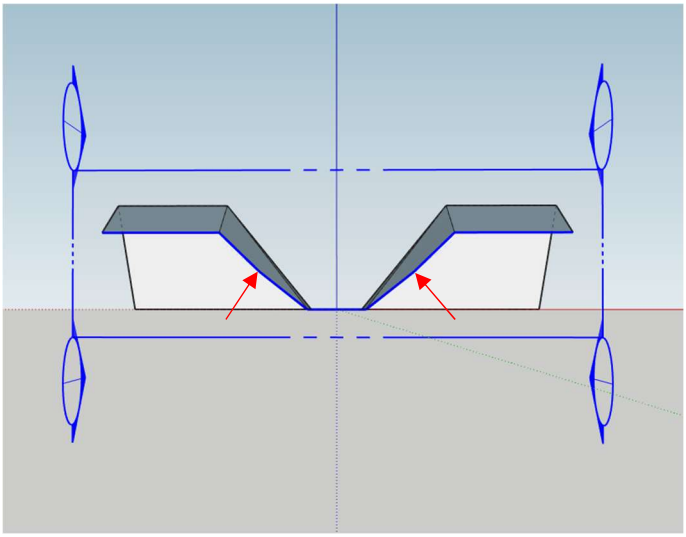

Section Cut (Between Lower and Upper Bolts)
(Note minor angle change (red arrows))

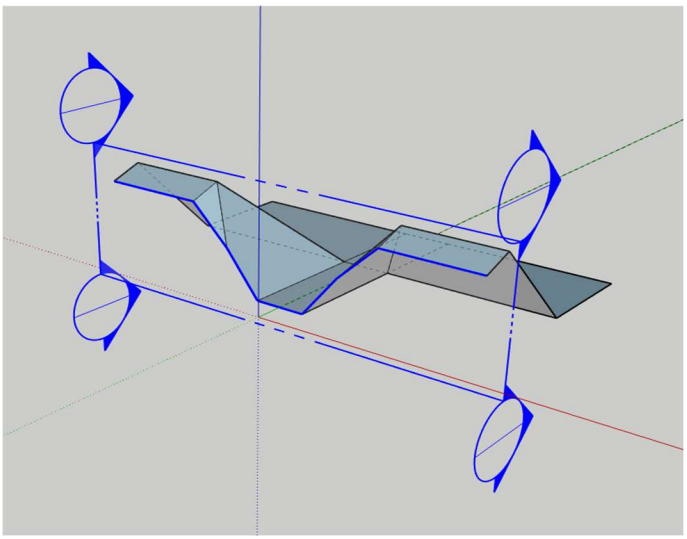

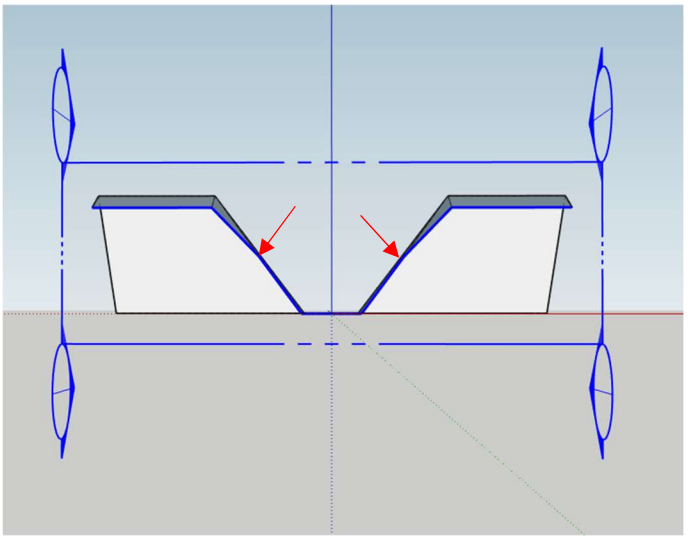

Section Cut (Between Lower and Upper Bolts)
(Note minor angle change (red arrows))

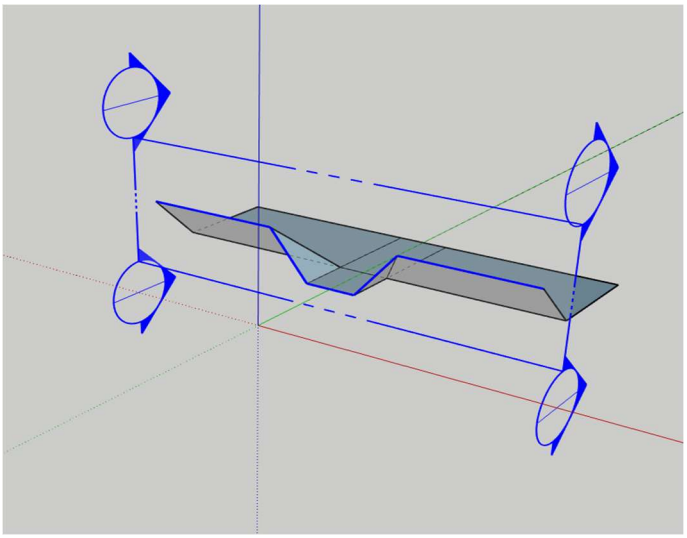

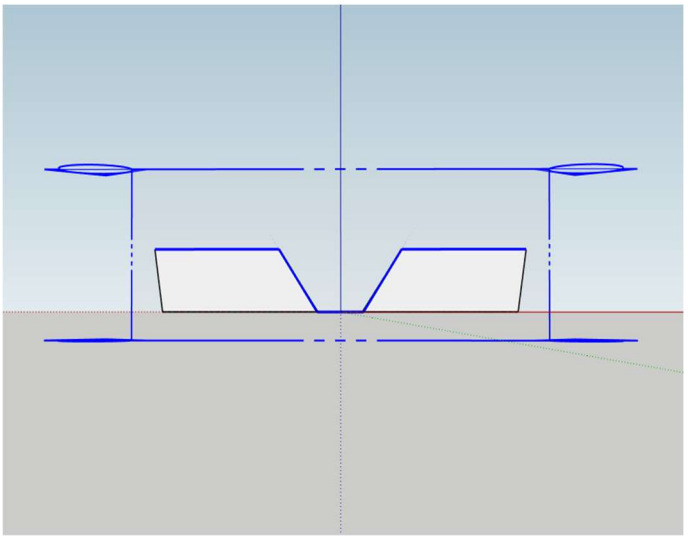

Section Cut (Above Upper Bolts)

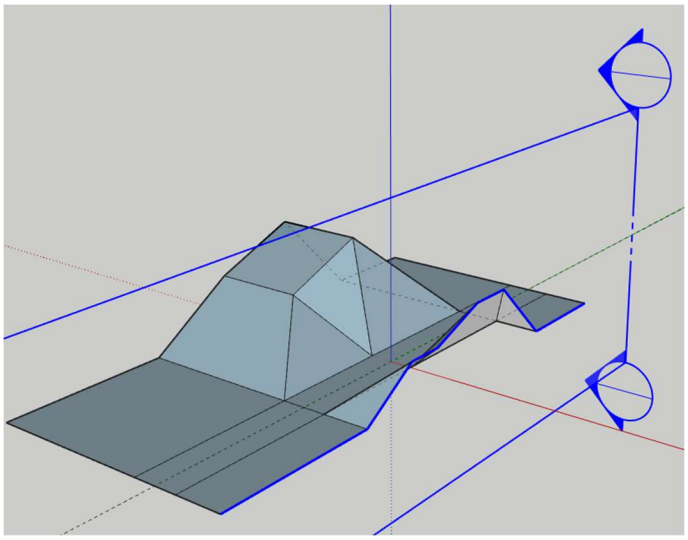

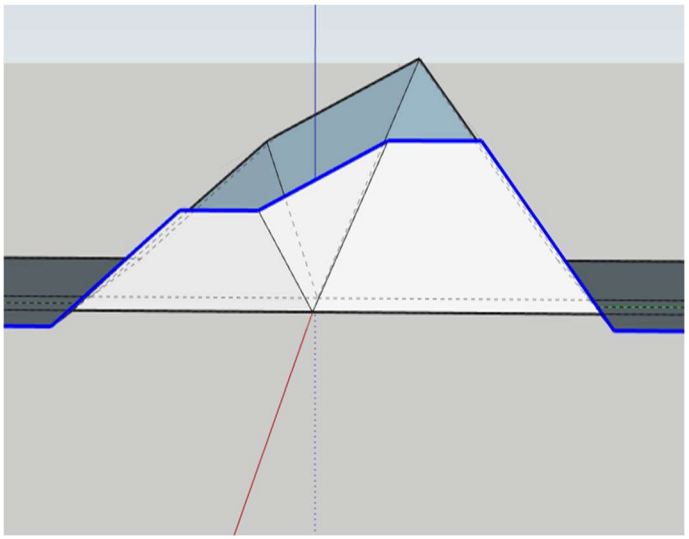

Section Cut (Side)

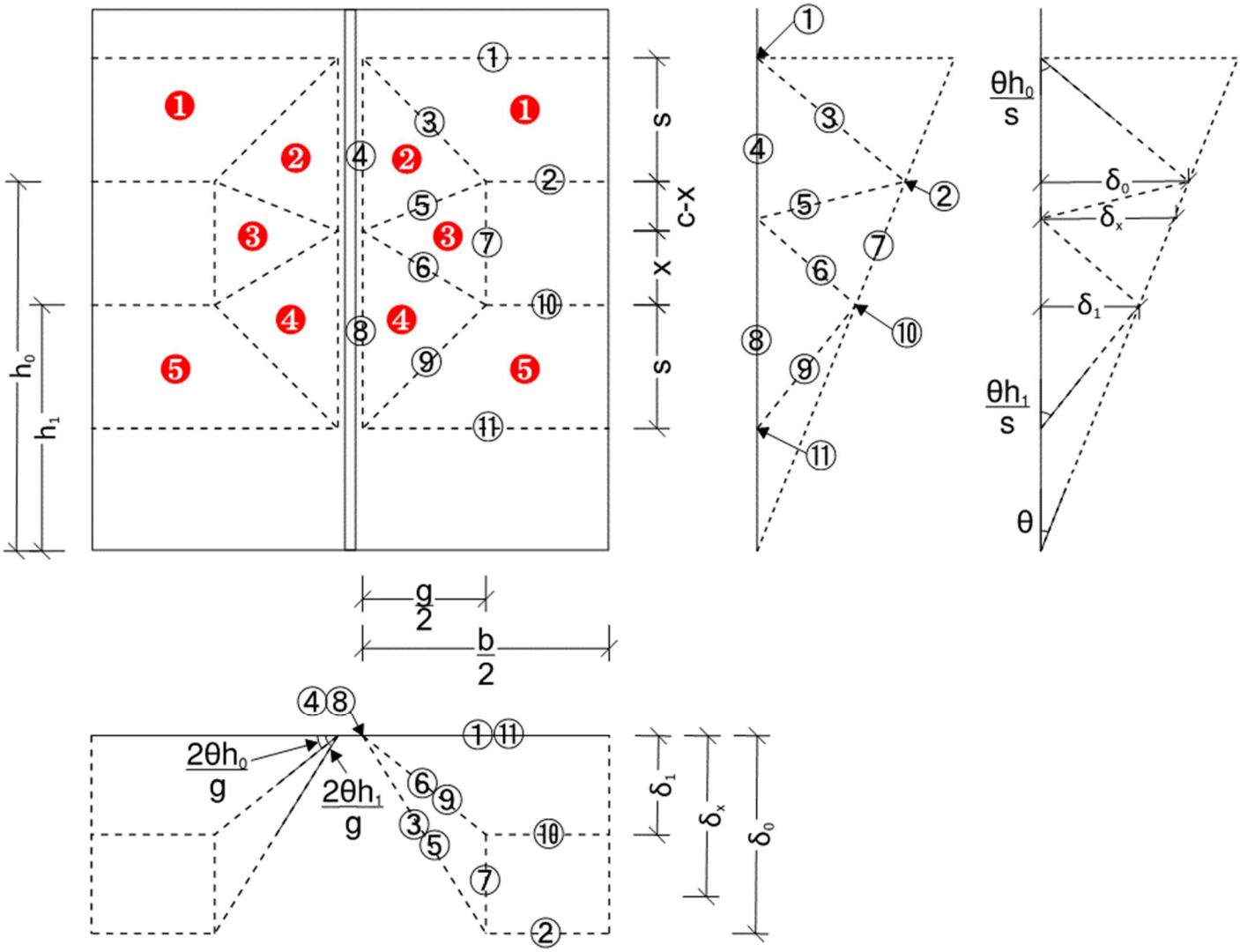

Yield Line Analysis Internal Work = External Work External Work Internal Work	$\sum W_i = \sum W_o$ $\sum W_o = M\theta$ $\sum W_i = \sum(ml\theta)$
Determine Angles of Yield Line Mechanism	$\theta = \frac{\delta_0}{h_0} = \frac{\delta_1}{h_1}$ $\therefore \quad \delta_0 = \theta h_0 \qquad \delta_1 = \theta h_1$ $\frac{\delta_0}{s} = \frac{h_0}{s}\theta \qquad \frac{\delta_1}{s} = \frac{h_1}{s}\theta \qquad \frac{\delta_0}{\frac{g}{2}} = \frac{2h_0}{g}\theta \qquad \frac{\delta_1}{\frac{g}{2}} = \frac{2h_1}{g}\theta$

Defining unknown angle located distance 'x' from lower bolt row $h_0 - h_1 = c$ Defining angle located between upper and lower bolt row (i.e. transition angle between segment ⑤&⑥ in Area 3)	$$\frac{\delta_x - \delta_1}{x} = \frac{\delta_0 - \delta_1}{c}$$ $$\therefore \delta_x = \frac{x}{c}(\delta_0 - \delta_1) + \delta_1$$ $$\frac{\delta_x}{\frac{g}{2}} = \frac{2}{g}\left(\frac{x}{c}(\delta_0 - \delta_1) + \delta_1\right) = \frac{2}{g}\left(\frac{x}{c}(h_0 - h_1) + h_1\right)\theta$$ $$\frac{\delta_x}{\frac{g}{2}} = \frac{2}{g}\left(\frac{x}{c}(c) + h_1\right)\theta = \frac{2}{g}(x + h_1)\theta$$ $$\frac{\delta_0 - \delta_1}{c} = \left(\frac{h_0 - h_1}{c}\right)\theta = \left(\frac{c}{c}\right)\theta = \theta$$
Area 1 Factor out $m\theta$ Grouping $\frac{b}{2}$ terms Grouping $\frac{g}{2}$ terms	Segment ①: $W_{①} = m\left(\frac{b}{2}\right)\left(\frac{\delta_0}{s}\right) = m\left(\frac{b}{2}\right)\left(\frac{h_0}{s}\right)\theta$ Segment ②: $W_{②} = m\left(\frac{b}{2} - \frac{g}{2}\right)\left(\frac{\delta_0}{s} + \theta\right) = m\left(\frac{b}{2} - \frac{g}{2}\right)\left(\frac{h_0}{s} + 1\right)\theta$ Segment ③: $W_{③} = m\left(\frac{g}{2}\right)\left(\frac{\delta_0}{s}\right) = m\left(\frac{g}{2}\right)\left(\frac{h_0}{s}\right)\theta$ $$\sum W_{1} = W_{①} + W_{②} + W_{③}$$ $$\sum W_{1} = m\left(\frac{b}{2}\right)\left(\frac{h_0}{s}\right)\theta + m\left(\frac{b}{2} - \frac{g}{2}\right)\left(\frac{h_0}{s} + 1\right)\theta + m\left(\frac{g}{2}\right)\left(\frac{h_0}{s}\right)\theta$$ $$\sum W_{1} = m\theta\left[\left(\frac{b}{2}\right)\left(\frac{h_0}{s}\right) + \left(\frac{b}{2} - \frac{g}{2}\right)\left(\frac{h_0}{s} + 1\right) + \left(\frac{g}{2}\right)\left(\frac{h_0}{s}\right)\right]$$ $$\sum W_{1} = m\theta\left[\left(\frac{b}{2}\right)\left(\frac{h_0}{s} + \frac{h_0}{s} + 1\right) + \left(\frac{g}{2}\right)\left(\frac{h_0}{s} - \frac{h_0}{s} - 1\right)\right]$$ $$\sum W_{1} = m\theta\left[\left(\frac{b}{2}\right)\left(\frac{2h_0}{s} + 1\right) - \left(\frac{g}{2}\right)\right]$$
Area 2	Segment ③: $W_{③} = m(s)\left(\frac{\delta_0}{\frac{g}{2}}\right) = m(s)\left(\frac{2h_0}{g}\right)\theta$ Segment ④: $W_{④} = m(s + c - x)\left(\frac{\delta_0}{\frac{g}{2}}\right) = m(s + c - x)\left(\frac{2h_0}{g}\right)\theta$

$h_0 - h_1 = c$	Segment ⑤: $W_{⑤} = m(c-x)\left(\frac{\delta_0}{\frac{g}{2}} - \frac{\delta_x}{\frac{g}{2}}\right) = m(c-x)\left(\frac{2}{g}\right)(h_0 - (x+h_1))\theta$ $W_{⑤} = m(c-x)\left(\frac{2}{g}\right)(c-x)\theta = m(c-x)^2\left(\frac{2}{g}\right)\theta$ $\sum W_{2} = W_{③} + W_{④} + W_{⑤}$ $\sum W_{2} = m(s)\left(\frac{2h_0}{g}\right)\theta + m(s+c-x)\left(\frac{2h_0}{g}\right)\theta + m(c-x)^2\left(\frac{2}{g}\right)\theta$
Factor out $m\theta$ Grouping $\frac{2}{g}$ terms	$\sum W_{2} = m\theta\left[(s)\left(\frac{2h_0}{g}\right) + (s+c-x)\left(\frac{2h_0}{g}\right) + (c-x)^2\left(\frac{2}{g}\right)\right]$ $\sum W_{2} = m\theta\left[\left(\frac{2}{g}\right)\left((s)(h_0) + (s+c-x)(h_0) + (c-x)^2\right)\right]$
Area 3	Segment ⑤: $W_{⑤} = m\left(\frac{g}{2}\right)\left(\frac{\delta_0-\delta_1}{c}\right) = m\left(\frac{g}{2}\right)\theta$ Segment ⑥: $W_{⑥} = m\left(\frac{g}{2}\right)\left(\frac{\delta_0-\delta_1}{c}\right) = m\left(\frac{g}{2}\right)\theta$ Segment ⑦: $W_{⑦} = m(c)\left(\frac{\delta_x}{\frac{g}{2}}\right) = m(c)\left(\frac{2}{g}\right)(x+h_1)\theta$ $\sum W_{3} = W_{⑤} + W_{⑥} + W_{⑦}$ $\sum W_{3} = m\left(\frac{g}{2}\right)\theta + m\left(\frac{g}{2}\right)\theta + m(c)\left(\frac{2}{g}\right)(x+h_1)\theta$
Factor out $m\theta$ Rearranging terms	$\sum W_{3} = m\theta\left[\frac{g}{2} + \frac{g}{2} + (c)\left(\frac{2}{g}\right)(x+h_1)\right]$ $\sum W_{3} = m\theta\left[g + \left(\frac{2}{g}\right)(c)(x+h_1)\right]$
Area 4	Segment ⑥: $W_{⑥} = m(x)\left(\frac{\delta_x}{\frac{g}{2}} - \frac{\delta_1}{\frac{g}{2}}\right) = m(x)\left(\frac{2}{g}\right)(x+h_1-h_1)\theta = m(x^2)\left(\frac{2}{g}\right)\theta$ Segment ⑧: $W_{⑧} = m(s+x)\left(\frac{\delta_1}{\frac{g}{2}}\right) = m(s+x)\left(\frac{2h_1}{g}\right)\theta$ Segment ⑨: $W_{⑨} = m(s)\left(\frac{\delta_1}{\frac{g}{2}}\right) = m(s)\left(\frac{2h_1}{g}\right)\theta$

Factor out $m\theta$ Grouping $\frac{2}{g}$ terms	$$\sum W_{4} = W_{⑥} + W_{⑧} + W_{⑨}$$ $$\sum W_{4} = m(x^2)\left(\frac{2}{g}\right)\theta + m(s+x)\left(\frac{2h_1}{g}\right)\theta + m(s)\left(\frac{2h_1}{g}\right)\theta$$ $$\sum W_{4} = m\theta\left[(x^2)\left(\frac{2}{g}\right) + (s+x)\left(\frac{2h_1}{g}\right) + (s)\left(\frac{2h_1}{g}\right)\right]$$ $$\sum W_{4} = m\theta\left[\left(\frac{2}{g}\right)\left(x^2 + (s+x)(h_1) + (s)(h_1)\right)\right]$$
Area 5 Factor out $m\theta$ Grouping $\frac{b}{2}$ terms Grouping $\frac{g}{2}$ terms	Segment ⑨: $W_{⑨} = m\left(\frac{g}{2}\right)\left(\frac{\delta_1}{s}\right) = m\left(\frac{g}{2}\right)\left(\frac{h_1}{s}\right)\theta$ Segment ⑩: $W_{⑩} = m\left(\frac{b}{2} - \frac{g}{2}\right)\left(\frac{\delta_1}{s} - \theta\right) = m\left(\frac{b}{2} - \frac{g}{2}\right)\left(\frac{h_1}{s} - 1\right)\theta$ Segment ⑪: $W_{⑪} = m\left(\frac{b}{2}\right)\left(\frac{\delta_1}{s}\right) = m\left(\frac{b}{2}\right)\left(\frac{h_1}{s}\right)\theta$ $$\sum W_{5} = W_{⑨} + W_{⑩} + W_{⑪}$$ $$\sum W_{5} = m\left(\frac{g}{2}\right)\left(\frac{h_1}{s}\right)\theta + m\left(\frac{b}{2} - \frac{g}{2}\right)\left(\frac{h_1}{s} - 1\right)\theta + m\left(\frac{b}{2}\right)\left(\frac{h_1}{s}\right)\theta$$ $$\sum W_{5} = m\theta\left[\left(\frac{g}{2}\right)\left(\frac{h_1}{s}\right) + \left(\frac{b}{2} - \frac{g}{2}\right)\left(\frac{h_1}{s} - 1\right) + \left(\frac{b}{2}\right)\left(\frac{h_1}{s}\right)\right]$$ $$\sum W_{5} = m\theta\left[\left(\frac{b}{2}\right)\left(\frac{h_1}{s} - 1 + \frac{h_1}{s}\right) + \left(\frac{g}{2}\right)\left(\frac{h_1}{s} - \frac{h_1}{s} + 1\right)\right]$$ $$\sum W_{5} = m\theta\left[\left(\frac{b}{2}\right)\left(\frac{2h_1}{s} - 1\right) + \left(\frac{g}{2}\right)\right]$$
Sum of Internal Work	$$\sum W_i = 2\left(W_{1} + W_{2} + W_{3} + W_{4} + W_{5}\right)$$ $$\sum W_i = 2m\theta\left[\left(\frac{b}{2}\right)\left(\frac{2h_0}{s} + 1\right) - \left(\frac{g}{2}\right) + \left(\frac{2}{g}\right)\left((s)(h_0) + (s+c-x)(h_0) + (c-x)^2\right) + g + \left(\frac{2}{g}\right)(c)(x+h_1) + \left(\frac{2}{g}\right)\left(x^2 + (s+x)(h_1) + (s)(h_1)\right) + \left(\frac{b}{2}\right)\left(\frac{2h_1}{s} - 1\right) + \left(\frac{g}{2}\right)\right]$$ $$\sum W_i = 2m\theta\left[\left(\frac{b}{2}\right)\left(\frac{2h_0}{s} + 1 + \frac{2h_1}{s} - 1\right) + \left(\frac{2}{g}\right)\left((s)(h_0) + (s+c-x)(h_0) + (c-x)^2 + (c)(x+h_1) + x^2 + (s+x)(h_1) + (s)(h_1)\right) + g\right]$$

	$\sum W_i = 2m\theta\left[\left(\frac{b}{2}\right)\left(\frac{2h_0}{s}+\frac{2h_1}{s}\right)+\left(\frac{2}{g}\right)\left((h_0)(s+s+c-x)+(h_1)(c+s+x+s)+(c-x)^2+(c)(x)+x^2\right)+g\right]$ $\sum W_i = 2m\theta\left[\left(\frac{b}{2}\right)\left(\frac{2h_0}{s}+\frac{2h_1}{s}\right)+\left(\frac{2}{g}\right)\left((h_0)(2s+c-x)+(h_1)(2s+c+x)+(c-x)^2+(c)(x)+x^2\right)+g\right]$ $\sum W_i = 2m\theta\left[\left(\frac{b}{2}\right)\left(\frac{2h_0}{s}+\frac{2h_1}{s}\right)+\left(\frac{2}{g}\right)\left((h_0)(2s+c-x)+(h_1)(2s+c+x)+(c^2-2cx+x^2)+cx+x^2\right)+g\right]$ $\sum W_i = 2m\theta\left[\left(\frac{b}{2}\right)\left(\frac{2h_0}{s}+\frac{2h_1}{s}\right)+\left(\frac{2}{g}\right)\left((h_0)(2s+c-x)+(h_1)(2s+c+x)+c^2-cx+2x^2\right)+g\right]$
Equate External Work to Internal Work	$\sum W_o = \sum W_i$ $M\theta = 2m\theta\left[\left(\frac{b}{2}\right)\left(\frac{2h_0}{s}+\frac{2h_1}{s}\right)+\left(\frac{2}{g}\right)\left((h_0)(2s+c-x)+(h_1)(2s+c+x)+c^2-cx+2x^2\right)+g\right]$ $M = 2m\left[\left(\frac{b}{2}\right)\left(\frac{2h_0}{s}+\frac{2h_1}{s}\right)+\left(\frac{2}{g}\right)\left((h_0)(2s+c-x)+(h_1)(2s+c+x)+c^2-cx+2x^2\right)+g\right]$
Solve for dimension 'x'. Take derivative of M and set equal to zero to find minimum value (smallest capacity) $h_0 - h_1 = c$	$\frac{dM}{dx} = 0$ $\frac{dM}{dx} = -h_0 + h_1 - c + 4x = 0$ $\frac{dM}{dx} = -(h_0 - h_1) - c + 4x = -2c + 4x = 0$ $\therefore x = \frac{c}{2}$
Aside: To ensure 'x' is a minimum value rather than a maximum, take the second derivative of M	$\frac{d^2M}{dx} = 4$ $\frac{d^2M}{dx} > 0$ $\therefore \frac{dM}{dx} = 0\ results\ in\ a\ minimum\ value$
Replace minimum 'x' value in M equation	$M = 2m\left[\left(\frac{b}{2}\right)\left(\frac{2h_0}{s}+\frac{2h_1}{s}\right)+\left(\frac{2}{g}\right)\left((h_0)\left(2s+c-\frac{c}{2}\right)+(h_1)\left(2s+c+\frac{c}{2}\right)+c^2-c\left(\frac{c}{2}\right)+2\left(\frac{c}{2}\right)^2\right)+g\right]$

	$$M = 2m\left[\left(\frac{b}{2}\right)\left(\frac{2h_0}{s}+\frac{2h_1}{s}\right)+\left(\frac{2}{g}\right)\left((h_0)\left(2s+\frac{c}{2}\right)+(h_1)\left(2s+\frac{3c}{2}\right)+c^2-\frac{c^2}{2}+\frac{c^2}{2}\right)+g\right]$$ $$M = 2m\left[\left(\frac{b}{2}\right)\left(\frac{2h_0}{s}+\frac{2h_1}{s}\right)+\left(\frac{2}{g}\right)\left((h_0)\left(2s+\frac{c}{2}\right)+(h_1)\left(2s+\frac{3c}{2}\right)+c^2\right)+g\right]$$
Set $M = M_{cf}$ Set $m = \frac{t^2F_y}{4}$ Set $b = b_{fc}$ Rearranging terms	$$M_{cf} = 2\left(\frac{t^2F_y}{4}\right)\left[\left(\frac{b_{fc}}{2}\right)\left(\frac{2h_0}{s}+\frac{2h_1}{s}\right)+\left(\frac{2}{g}\right)\left((h_0)\left(2s+\frac{c}{2}\right)+(h_1)\left(2s+\frac{3c}{2}\right)+c^2\right)+g\right]$$ $$M_{cf} = \left(\frac{t^2F_y}{2}\right)\left[\left(\frac{b_{fc}}{2}\right)\left(\frac{2h_0}{s}+\frac{2h_1}{s}\right)+\left(\frac{2}{g}\right)\left((h_0)\left(2s+\frac{c}{2}\right)+(h_1)\left(2s+\frac{3c}{2}\right)+c^2\right)+g\right]$$ $$M_{cf} = (t^2F_y)\left[\left(\frac{b_{fc}}{2}\right)\left(\frac{h_0}{s}+\frac{h_1}{s}\right)+\left(\frac{2}{g}\right)\left((h_0)\left(s+\frac{c}{4}\right)+(h_1)\left(s+\frac{3c}{4}\right)+\frac{c^2}{2}\right)+\frac{g}{2}\right]$$ $$M_{cf} = (t^2F_y)\left[\left(\frac{b_{fc}}{2}\right)\left(h_1\left(\frac{1}{s}\right)+h_0\left(\frac{1}{s}\right)\right)+\left(\frac{2}{g}\right)\left(h_1\left(s+\frac{3c}{4}\right)+h_0\left(s+\frac{c}{4}\right)+\frac{c^2}{2}\right)+\frac{g}{2}\right]$$
AISC Design Guide 4 Table 3.4. Equation (for Unstiffened Column Flange)	$$\phi M_{cf} = \phi_b F_{yc}\, t_{fc}{}^2 Y_c$$ $$Y_c = \frac{b_{fc}}{2}\left[h_1\left(\frac{1}{s}\right)+h_0\left(\frac{1}{s}\right)\right]+\frac{2}{g}\left[h_1\left(s+\frac{3c}{4}\right)+h_0\left(s+\frac{c}{4}\right)+\frac{c^2}{2}\right]+\frac{g}{2}$$ $$s = \frac{1}{2}\sqrt{b_{fc}\, g}$$