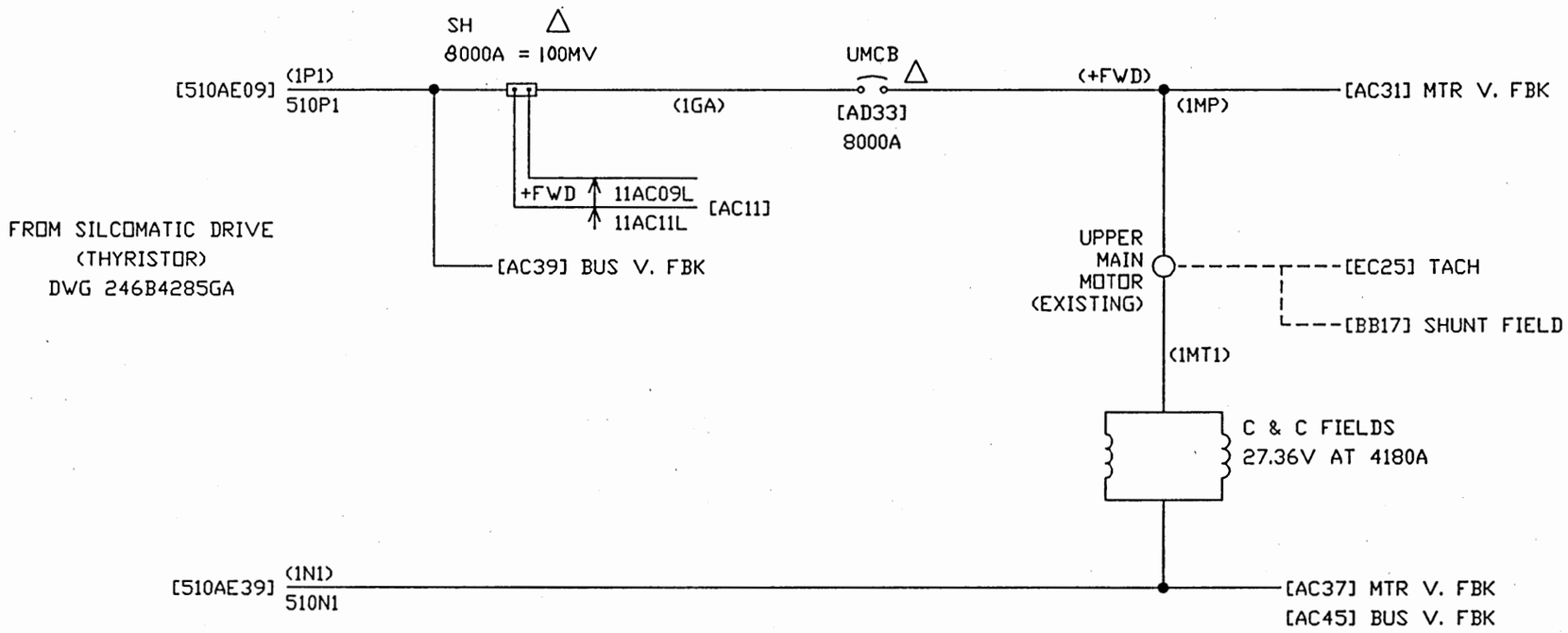

MOTOR DATA ITEM 101A
FRAME ENCL HP 4200
BASE SPEED 30. TOP SPEED 60.
ARM VOLTS 700. ARM AMPS 5016 ARM IND 0.922 MH
ARM & COMM FLD R 0.0148 *
FIELD AMPS @BASE 376 @ TOP 136
FLD VOLTS (HOT) 62 * FLD R * 0.156 FIELD IND 4.45 H
MOTOR ROTATION CCW
TOTAL DRIVE INERTIA 1,894,000 LB-FT ^{2}

GEAR RATIO: 1:1

(1N1) CUSTOMER WIRE NO. (TYPICAL)

△ EXISTING DEVICE ON LINE PANEL

* AT 75°C, FIELDS PARALLELED