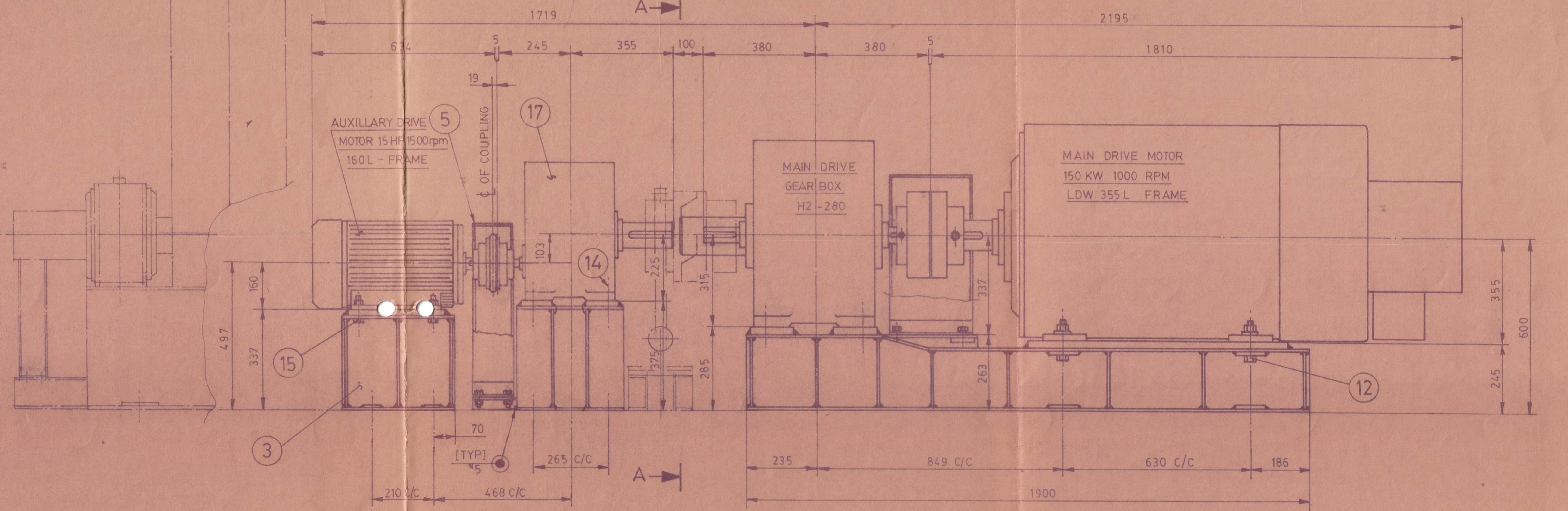

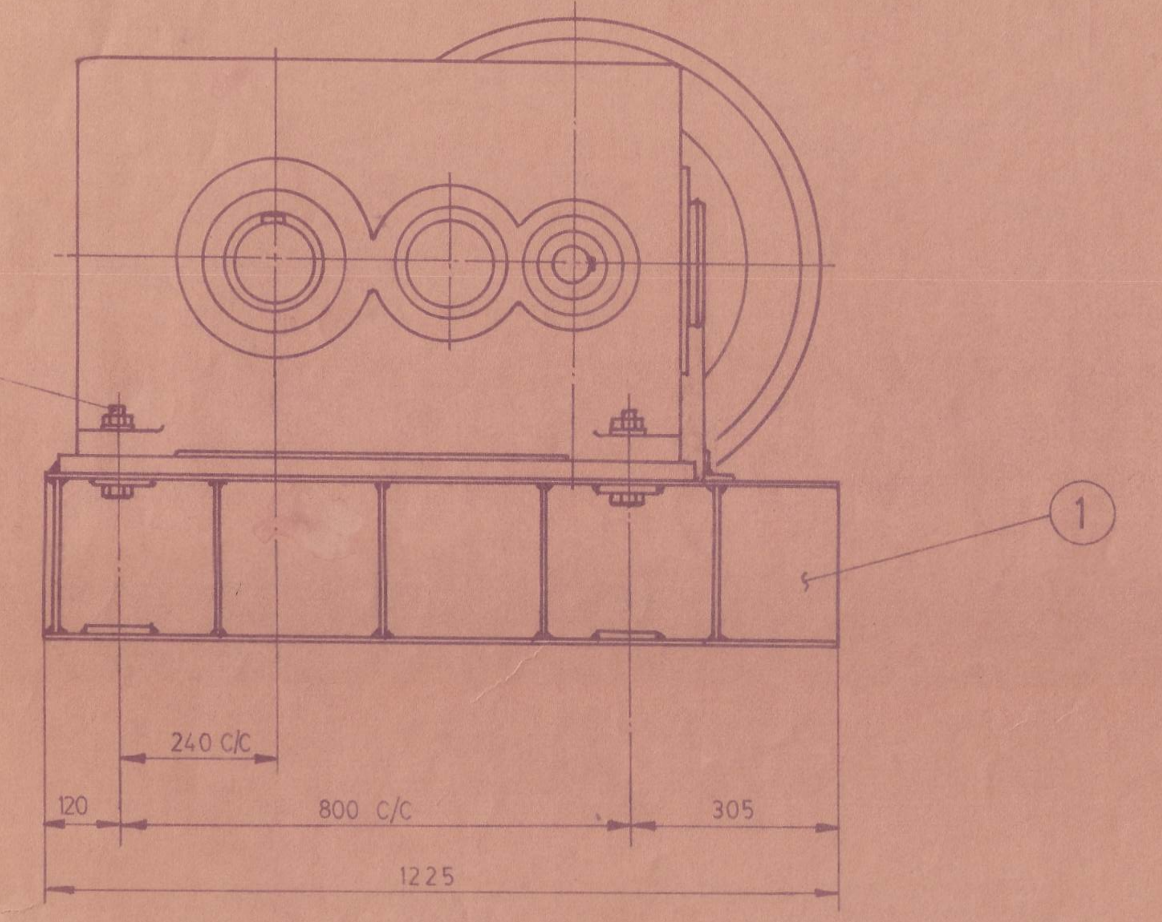

VIEW FROM A-A

DRIVE DETAILS

1. MAIN DRIVE MOTOR
   150 KW, 1000 RPM, FRAME LDW 355 L
   MAKE - KIRLOSKAR
2. MAIN DRIVE GEAR BOX
   H2-280 DOUBLE REDUCTION HELICAL
   6·3 : 1 REDUCTION
   MAKE - GREAVES
3. AUXILLARY DRIVE MOTOR
   15 HP, 1500 RPM, FRAME 160 L
   MAKE - KIRLOSKAR
4. AUXILLARY DRIVE GEAR BOX
   H3-200 TRIPLE REDUCTION - 80 : 1 HELICAL
   MAKE - GREAVES

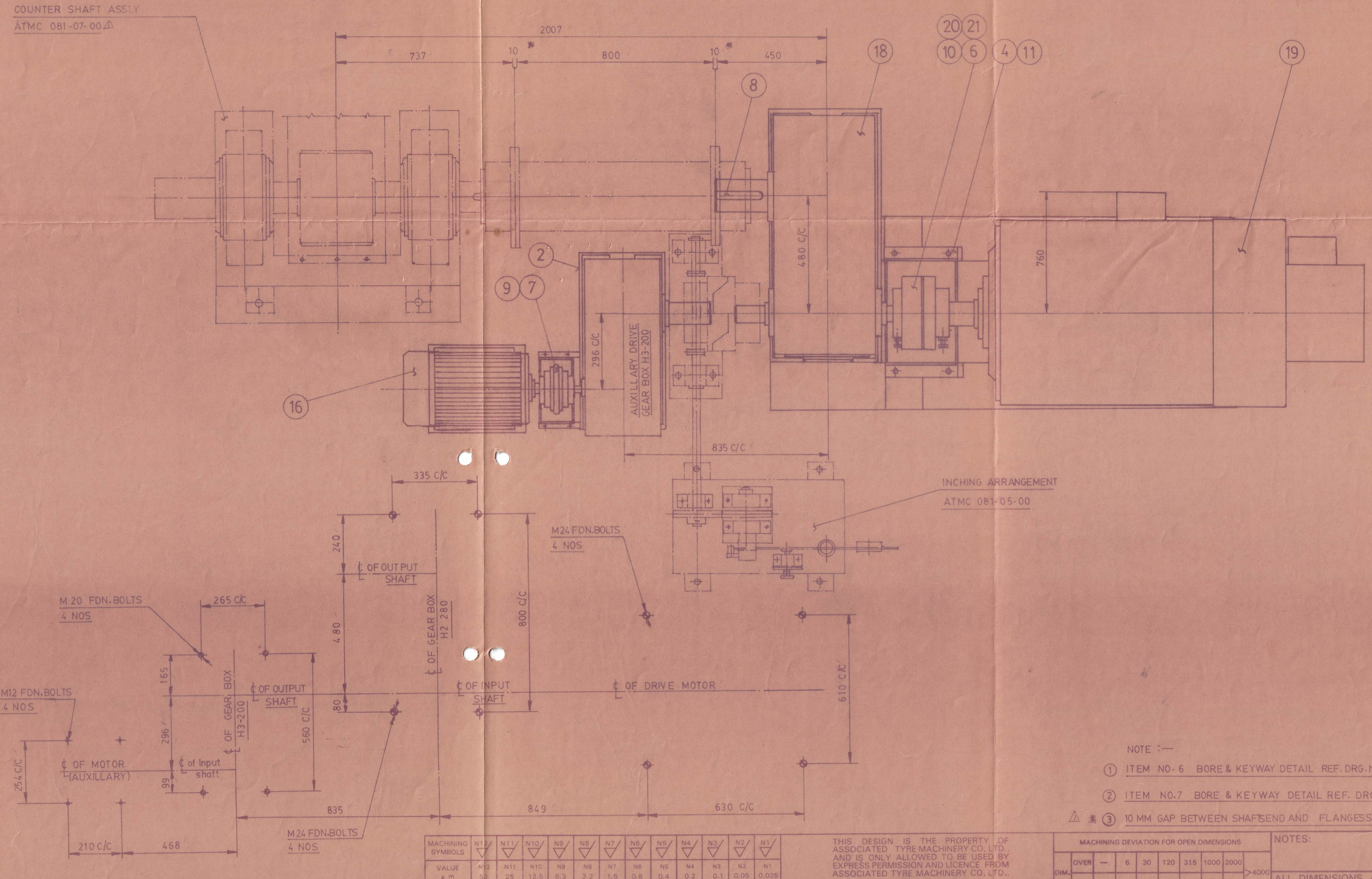

FOUNDATION PLAN

NOTE :—

1. ITEM NO. 6 BORE & KEYWAY DETAIL REF. DRG. NO. ATMC 081-04-06
2. ITEM NO.7 BORE & KEYWAY DETAIL REF. DRG. NO. ATMC 081 04-07
3. ⚠ * 10 MM GAP BETWEEN SHAFTSEND AND FLANGESSHOULD BE FLUSH MOUNTED

ITEM NO.	DESCRIPTION	DRG. NO.	MATERIAL	SPECIFICATION	QTY.	WEIGHT KGS.	REMARK
21	HEX. HD. SCREW M12X1·75X80 LG.		MS	IS:1364	1		WITH NUT
20	HEX. HD. SCREW M20X2·5X70 LG.		MS	IS:1364	1		WITH NUT
19	DRIVE MOTOR (MAIN) 150 KW, 1000 RPM				1		FRAME LDW 355 L
18	MAIN GEAR BOX H2-280				1	860·0	
17	AUXILLARY GEAR BOX H3-200				1	400·0	
16	AUXILLARY DRIVE MOTOR 15 HP, 1500 RPM				1		FRAME 160 L
15	HEX. HD. BOLT M12X1·75X65 LG.		MS	IS:1364	4		WITH NUT & SPRING WASHER & WASHER
14	HEX. HD. BOLT M20X2·5X85 LG.		"	"	4		"
13	HEX. HD. BOLT M24X3X115 LG.		"	"	4		"
12	HEX. HD. BOLT M24X3X130 LG.		"	"	4		WITH NUT & WASHER
11	HEX. HD. SCREW M12X1·75X35 LG.		MS	IS:1364	4		WITH WASHER
10	KEY [H2-280 INPUT]	ATMC 081-04-10	C 40	IS:1570	1	0·2	
9	KEY [H3-200 INPUT]	ATMC 081-04-09	"	"	1	0·03	
8	KEY [H2-280 OUTPUT]	ATMC 081-04-08	C 40	IS:1570	1	0·9	
7	FENAFLEX COUPLING F80-FENNER				1	9·6	
6	BUSH TYPE FLEXIBLE COUPLING NB7A Fenner				1		
5	COUPLING GUARD	ATMC 081-04-05	MS	IS:2062	1	10·0	
4	COUPLING GUARD	ATMC 081-04-04	"	"	1	17·0	
3	AUXILLARY MOTOR BED PLATE	ATMC 081-04-03	"	"	1	62·0	
2	AUXILLARY GEAR BOX BED PLATE	ATMC 081-04-02	"	"	1	132·0	
1	MAIN DRIVE BED PLATE	ATMC 081-04-01	MS	IS:2062	1	530·0	

MACHINING SYMBOLS	N12	N11	N10	N9	N8	N7	N6	N5	N4	N3	N2	N1
VALUE μm	50	25	12.5	6.3	3.2	1.6	0.8	0.4	0.2	0.1	0.05	0.025

REFERENCE

THIS DESIGN IS THE PROPERTY OF ASSOCIATED TYRE MACHINERY CO. LTD., AND IS ONLY ALLOWED TO BE USED BY EXPRESS PERMISSION AND LICENCE FROM ASSOCIATED TYRE MACHINERY CO. LTD.

DO NOT SCALE IF IN DOUBT ASK

MACHINING DEVIATION FOR OPEN DIMENSIONS

DIM.								
OVER	—	6	30	120	315	1000	2000	>4000
UPTO	6	30	120	315	1000	2000	4000	
TOLERANCE	± 0.1	± 0.2	± 0.3	± 0.5	± 0.8	± 1.2	± 2	± 3

NOTES:

ALL DIMENSIONS ARE IN M.M. UNLESS OTHERWISE SPECIFIED.

REMOVE ALL SHARP CORNERS

ISSUE NO.	AMENDMENTS	APPRD.
⚠ 11-3-95	NOTE ADDED FOR TORSION SHAFT MOUNTING	

TITLE: (477) CONICAL PEBBLE MILL
MAIN DRIVE ARRANGEMENT

ATMC — ASSOCIATED TYRE MACHINERY CO. LTD. MADUKKARAI

WEIGHT 2022·0 kgs Approx.
DESIGNED BY:
DRAWN BY: OP/AK
TRACED BY:
CHECKED BY: ARDHANAREE
SCALE 1:10, 5
DATE 10-12-94
DRG. NO. ATMC 081-04-00 ⚠