Date: 25/APR/24

PHC PILE CRAKED REPORT (PILE NO.67)

The main reason of pile cracked are **No.1 The soil is tightly compressed** and **No.2 The manufacturing process improper curing work and the inconsistency of concrete mixing work.**

On 20/APR/24 Pile No.67 has been into the soil with the 1st pile Type A and the 2nd Pile type B. The pile connection are joined by Welding Method.

After welding completed The Pile start driving again, however after 59 blow we found out that The Pile Type B was cracked.

Piling contractor have conducted the investigation on this defect, and the causes of reasons are mentioned below.

- **No.1** Pile No.67 is the 4th driven pile within 1 pile cap, After the completion of the other 3 piles No.64,65,66. This soil is tightly compressed and this cause the over shock between the soil and the PHC pile and the initial hammer stroke. The structure of the pile is damaged and the crack appeared.
- **No.2** Pile type B could consist of the error during the manufacturing process such as improper curing work and the inconsistency of concrete mixing work which can affect the pile quality. However, this unexpected quality does not represent of the Engineer. Contactor will review this random defect of pile and compromise to fulfill the missing quality of manufacturing work in the factory.

THE PROJECT FOR THE CONSTRUCTION OF TRAINING COMPLEX AND OUTREACH FACILITY OF CAMBODAIN MINE ACTION CENTER (OF)

PILING WORK REPORT

No. 001

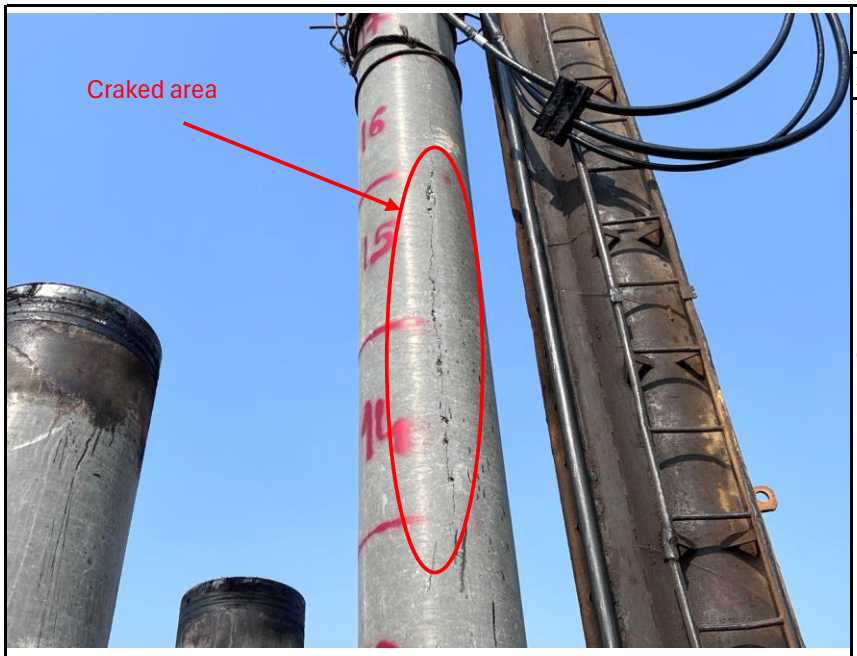

No. 1	
Date	20-Apr-24
Discription:	PILING WORK Pile Driving Work Pile No. 67 Pile Type: B7 Pile Length: 7m
Comment :	

No. 2	
Date	20-Apr-24
Discription:	PILING WORK Pile Driving Work Pile No. 67 Pile Type: B7 Pile Length: 7m
Comment :	

No. 3	
Date	20-Apr-24
Discription:	PILING WORK Pile Driving Work Pile No. 67 Pile Type: B7 Pile Length: 7m
Comment :	

THE PROJECT FOR THE CONSTRUCTION OF TRAINING COMPLEX AND OUTREACH FACILITY
CAMBODIAN MINE ACTION CENTER (OF)

SATO KOGYO CO., LTD

PILE DRIVING RECORD

No. 009

Pile No : 67 Start Date : 20/04/2024 Finished Date: 20/04/2024

Start Time : Finished Time :

Rig Nº	**CCH500**
Wt.Of Hammer	**9T**
Type of Pile	**P60(ø600)**
Length (m)	**17m(10m+7m)**
Existing Ground Level (mm)	**GL+220**
Depth from E.G.L (m)	**9.62**
Top of Pile Level (mm)	**GL+600**

INSTALLING	Type	Casting date	Start Time	Finish Time
1. First Pile	A10	2-May-22	14:02	14:25
2. Welding			14:25	15:24
3. Second Pile	B7	9-Apr-24	15:24	

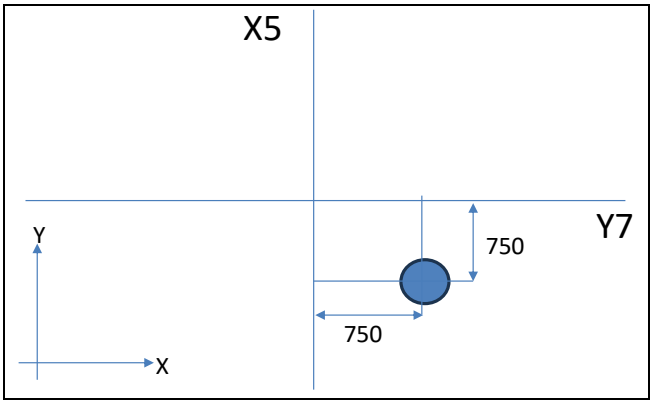

Depth From E.G.L (m)	Blow	Penetration (mm)	Hight of Ram (m)	Capacity (ton)
0-1	47	1000	0.4 m	44.67
1-2	33	1000	0.4 m	33.60
2-3	27	1000	0.4 m	28.36
3-4	40	1000	0.4 m	39.33
4-5	50	1000	0.5 m	57.00
5-6	48	1000	0.6 m	64.81
6-7	67	1000	0.6 m	81.88
7-8	88	1000	0.6 m	97.34
8-9	100	1000	0.6 m	104.93
9-9.20	21	20	0.6 m	217.28
9.20-9.62	59	42	0.6 m	223.65

Depth From E.G.L (m)	Blow	Penetration (mm)	Hight of Ram (m)	Capacity (ton)

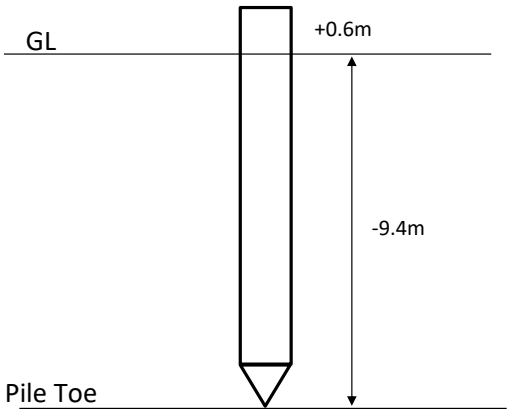

Remark : **Temperary stop 20/Apr/2024 at 15:35 Pile Type B was broken**

RECORDED BY

Name: _____

Position : _____

Date : _____

CHECKED BY

Name: _____

Position : _____

Date : _____