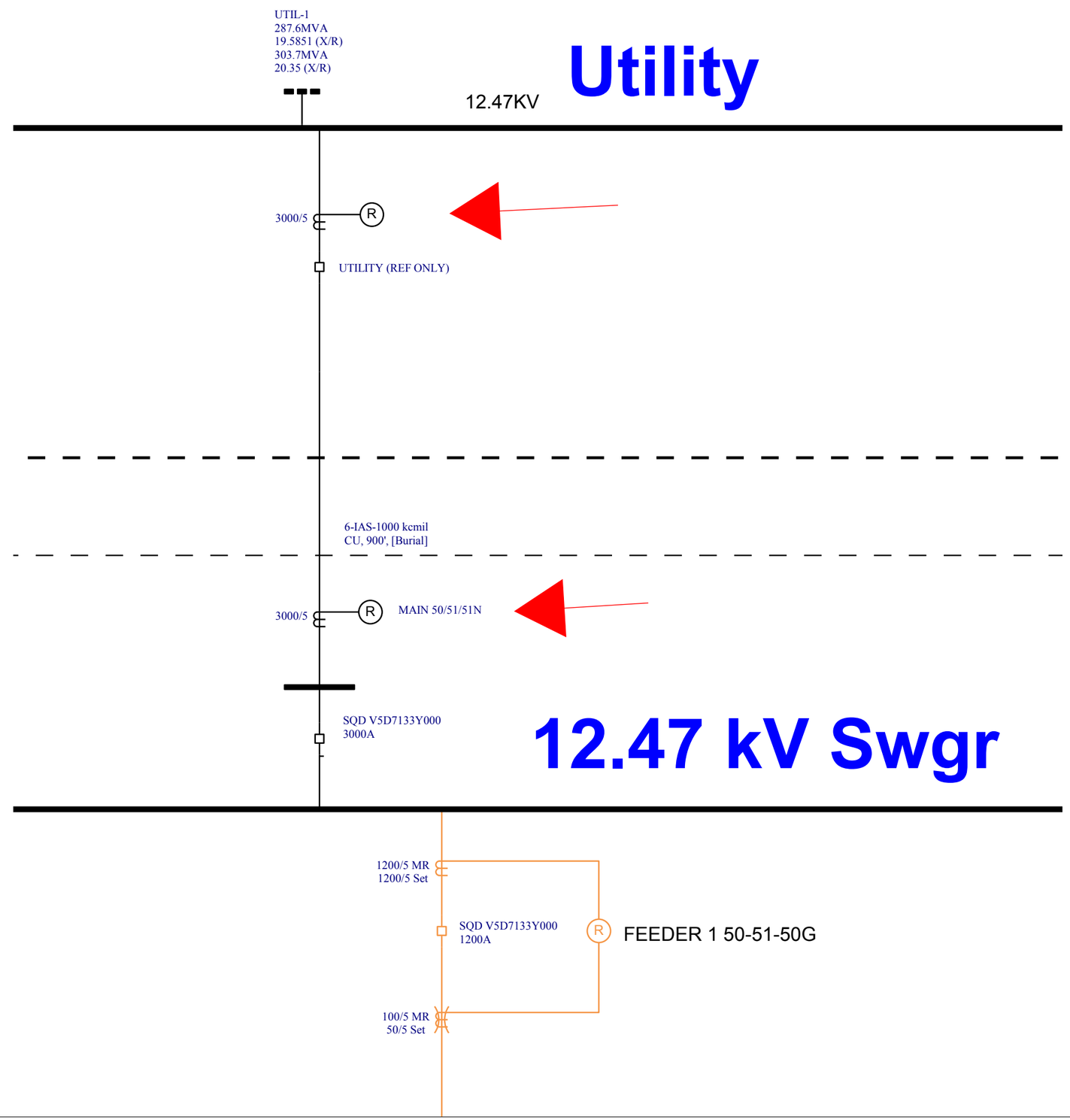
UTIL-1
287.6MVA
19.5851 (X/R)
303.7MVA
20.35 (X/R)
12.47KV
Utility
3000/5
R
UTILITY (REF ONLY)
6-IAS-1000 kcmil
CU, 900', [Burial]
3000/5
R
MAIN 50/51/51N
SQD V5D7133Y000
3000A
12.47 kV Swgr
1200/5 MR
1200/5 Set
SQD V5D7133Y000
1200A
R
FEEDER 1 50-51-50G
100/5 MR
50/5 Set

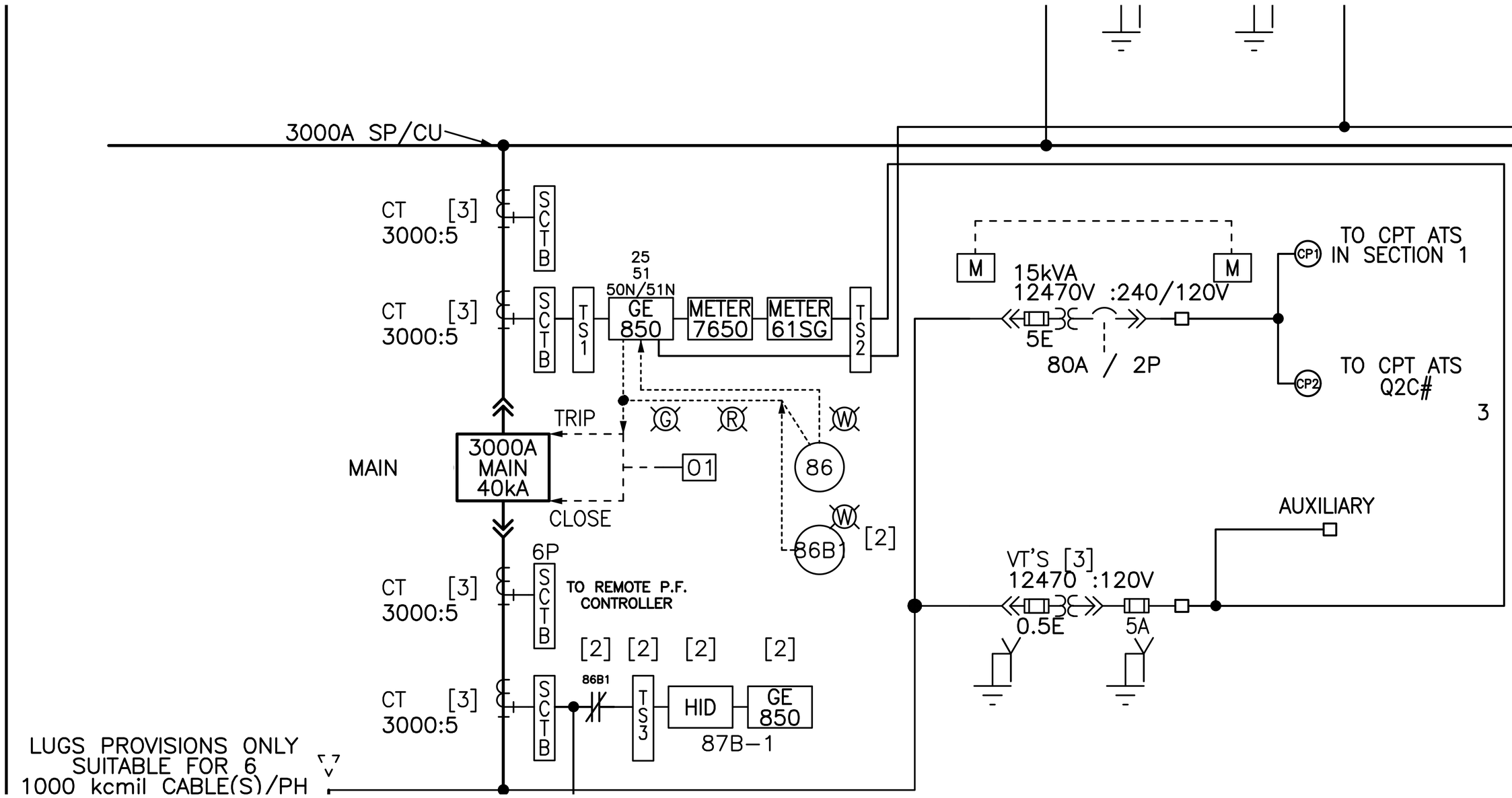
3000A SP/CU
CT [3]
3000:5
SCTB
CT [3]
3000:5
SCTB
TS1
25
51
50N/51N
GE
850
METER
7650
METER
61SG
TS2
M
15kVA
12470V :240/120V
M
5E
80A / 2P
TO CPT ATS
IN SECTION 1
CP1
TO CPT ATS
Q2C#
CP2
3
TRIP
G
R
W
3000A
MAIN
40kA
MAIN
01
86
CLOSE
W
[2]
86B1
AUXILIARY
6P
CT [3]
3000:5
SCTB
TO REMOTE P.F.
CONTROLLER
VT'S [3]
12470 :120V
0.5E
5A
[2] [2] [2] [2]
86B1
CT [3]
3000:5
SCTB
TS3
HID
GE
850
87B-1
LUGS PROVISIONS ONLY
SUITABLE FOR 6
1000 kcmil CABLE(S)/PH

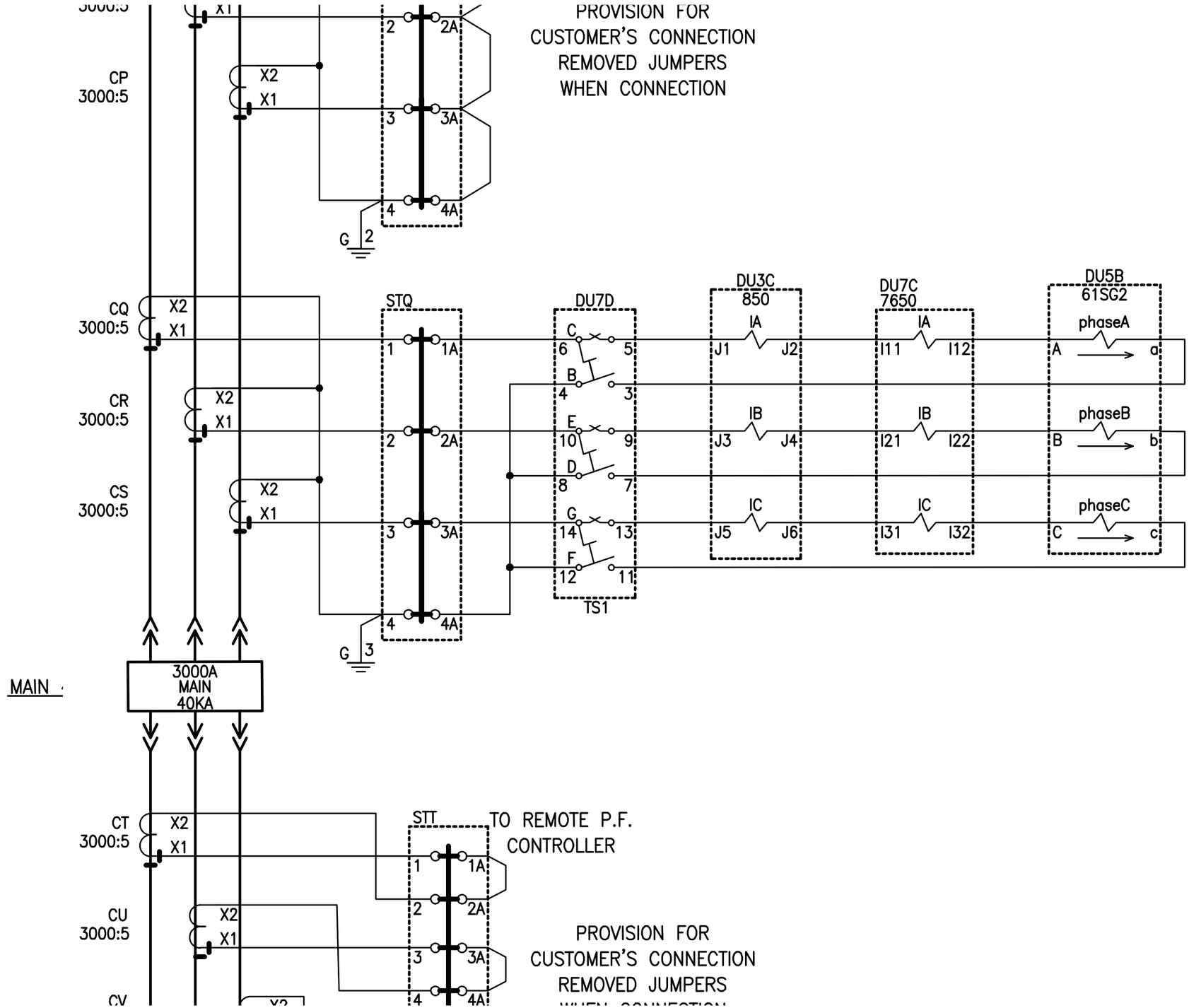

JOB NAME:	
JOB LOCATION	
DRAWN BY:	
ENGR:	
DATE:	
DRAWING STA	

BY	
DATE	

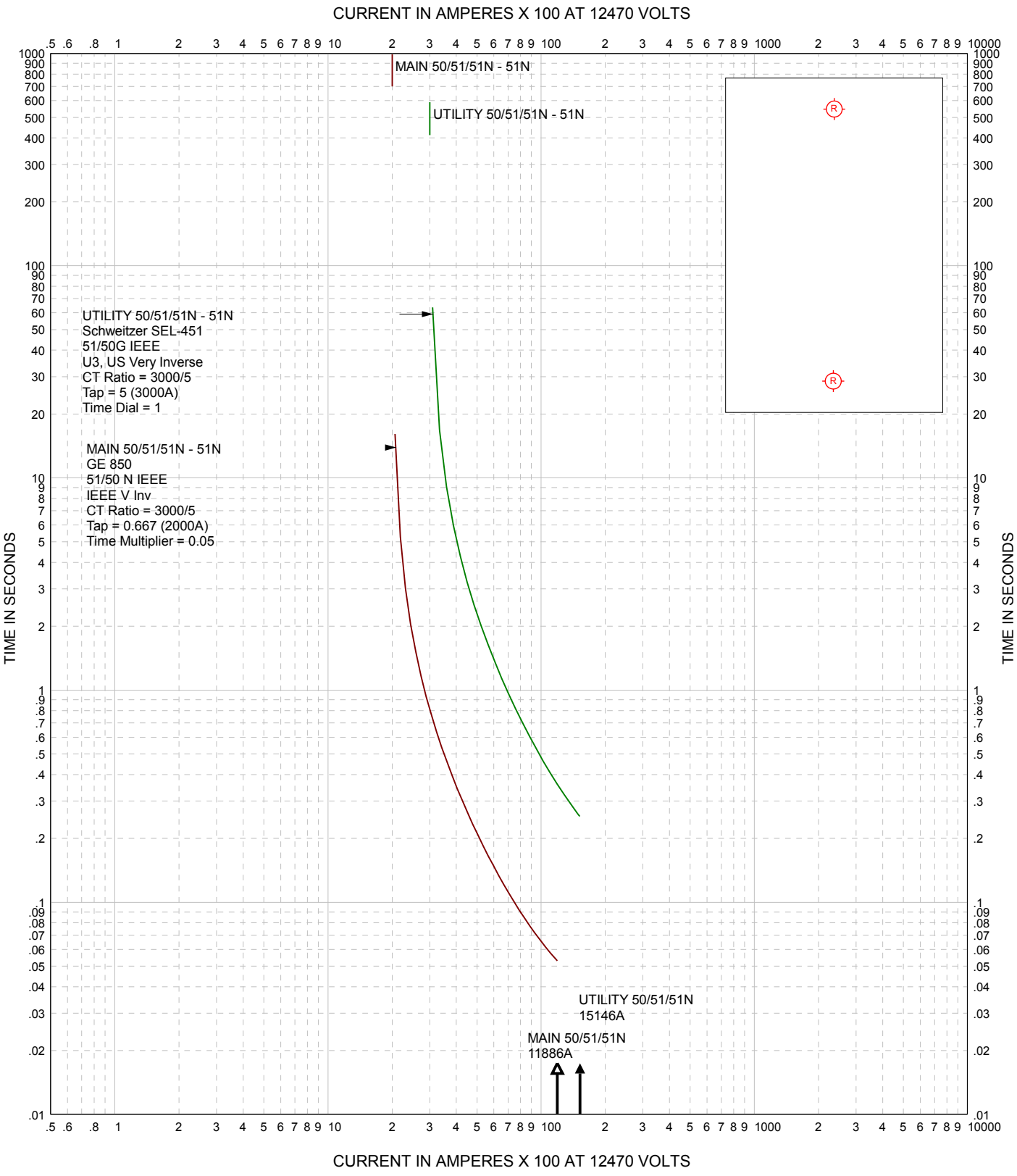

	EasyPower® **TIME-CURRENT CURVES**	TCC-14
		FAULT:
		DATE: 6/17/2019
		BY:
		REVISION: 1