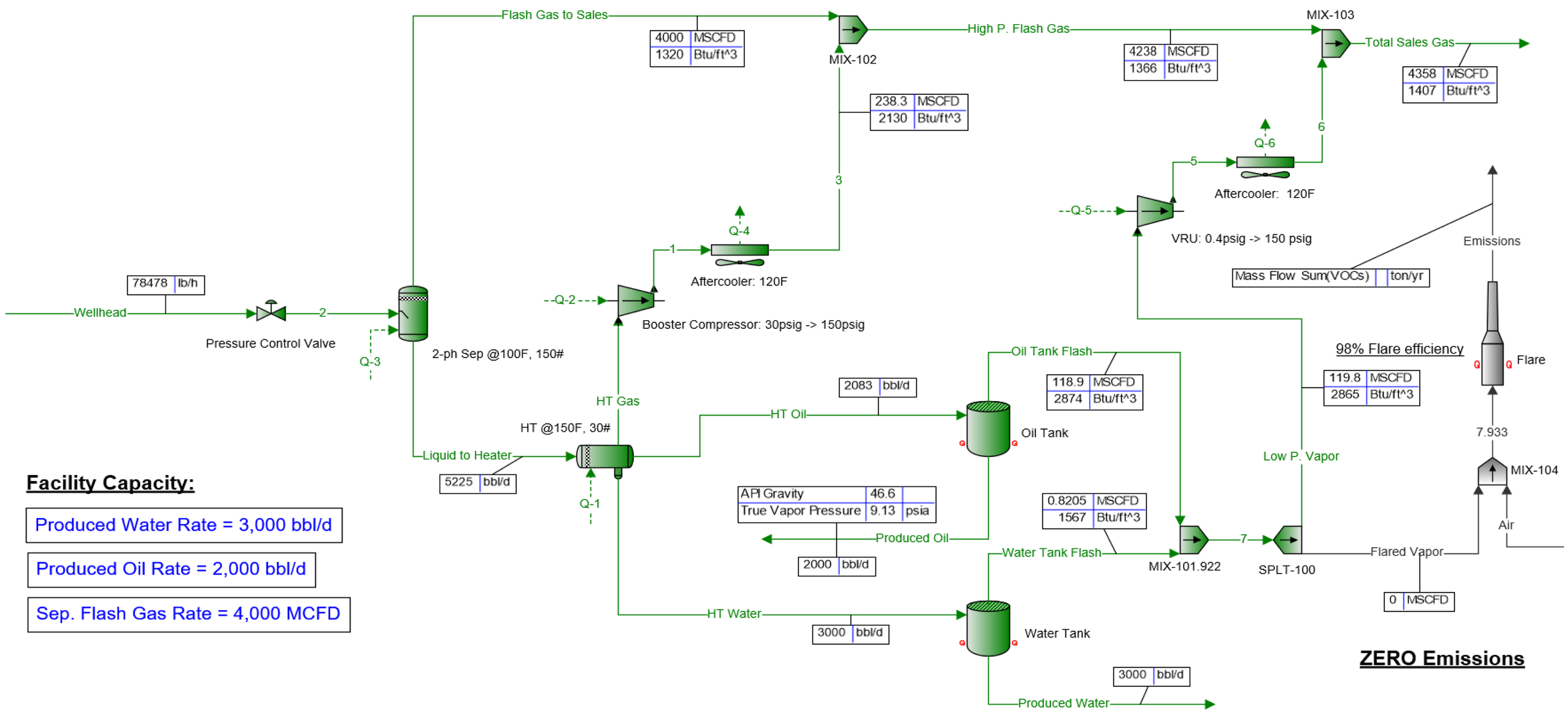

NOTES:

NO.	DATE	DRN. BY	CHK'D BY	APP.	REVISION DESCRIPTION
7					
6					
5					
4					
3					
2					
1					
0	5/22/2024				INITIAL DRAFT

PROJECT FOR:

LOCATION: EXAMPLE FACILITY

CHECKED BY: | DATE: | DRAWN BY: | DATE: 5/22/24 | SCALE: NONE

DRAWING NO.: PFD-EXPL-1001 | SHEET NO.: 2 OF 2

DRAWING TITLE: FACILITY SIMULATION - WITHOUT VRT | Rev. NO.: | REV. DATE:

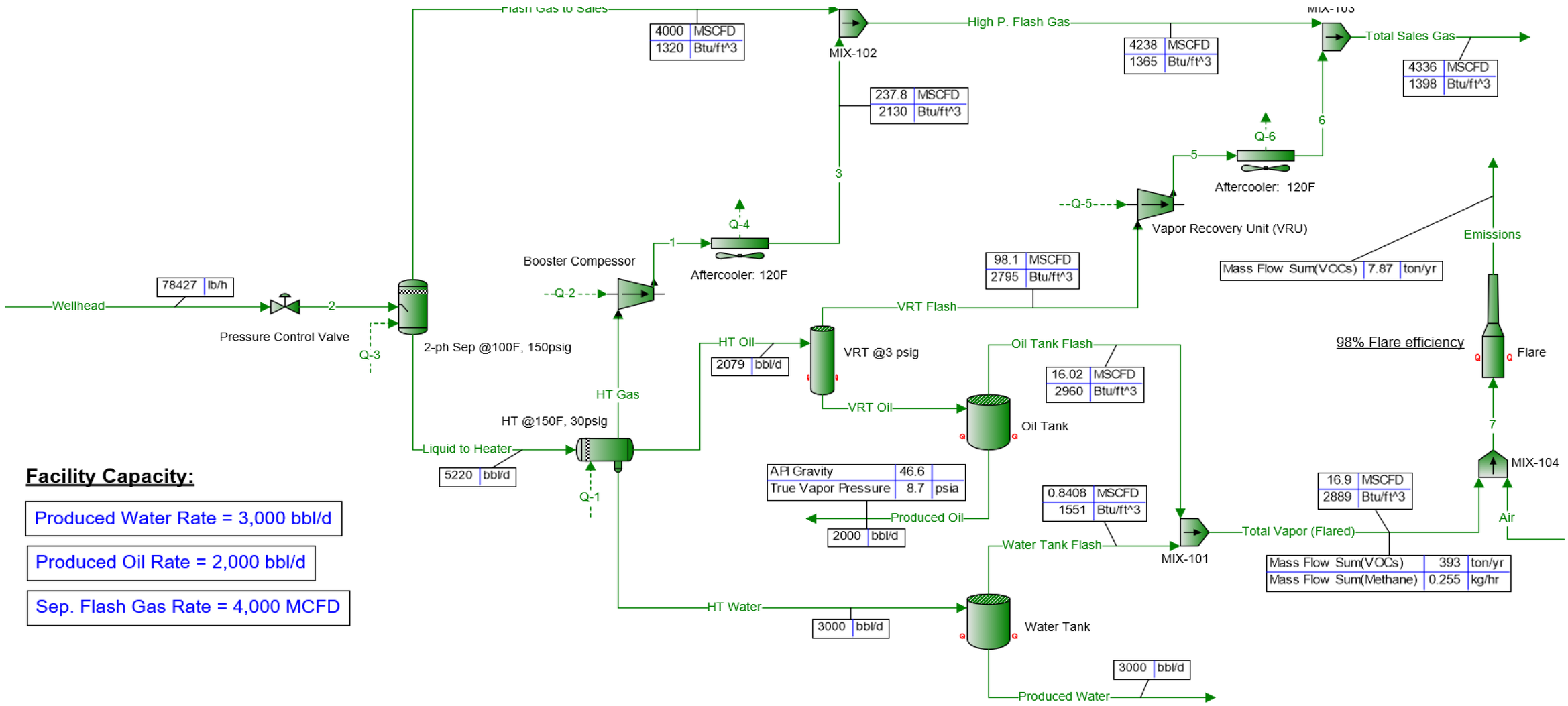

Facility Capacity:

Produced Water Rate = 3,000 bbl/d

Produced Oil Rate = 2,000 bbl/d

Sep. Flash Gas Rate = 4,000 MCFD

NOTES:

NO.	DATE	DRN. BY	CHK'D BY	APP.	REVISION DESCRIPTION
7					
6					
5					
4					
3					
2					
1					
0	5/22/2024				INITIAL DRAFT

PROJECT FOR:

LOCATION:

CHECKED BY:	DATE:	DRAWN BY:	DATE:	SCALE:
			5/22/24	NONE

DRAWING NO.: PFD-EXPL-2001

SHEET NO.: 2 OF 2

DRAWING TITLE: FACILITY SIMULATION - WITH VRT

Rev. NO.:

REV. DATE: