Florida Department of Transportation

RICK SCOTT
GOVERNOR

RACHEL D. CONE
INTERIM SECRETARY

STRUCTURES DESIGN OFFICE
District VI
1000 NW 111th Ave., Miami, FL 33172
Tel: (305) 470-5444
Fax: (305) 470- 5293

SHOP DRAWING TRANSMITTAL

TO: Bolton, Perez & Associates
7205 Corporate Center Drive
Suite 201
Miami, FL 33126

DATE: 06/27/17
W.P.I. No:
FIN. PROJECT No: 434688-1
F.A.:
COUNTY:
SUBM No: 006

Attention: Jose E Morales

We are sending you:

COPY	DATE	DESCRIPTION	CODE
1	06/21/17	PT01 – Multistrand General Notes	RC
1	6/21/17	PT01.1 – PT Bar General Notes	RC
1	6/21/17	PT01.2 – VSLAB 6-4 System Drawings	RCN
1	6/21/17	PT01.3 – ECI 6-12 System Drawings	RCN
1	6/21/17	PT01.4 – ECI 6-19 System Drawings	RCN
1	6/21/17	PT01.5 – 1-3/8" PT Bar System Drawings	RCN
1	6/21/17	PT01.6 – 1-3/4" PT Bar System Drawings	RCN
1	6/21/17	PT01.7 – 2-1/2" PT Bar System Drawings	RCN
1	6/21/17	PT02 – Deck PT Plan – Main Span	RCN
1	6/21/17	PT02.1 – Deck PT Plan – Main Span PT Profiles	RC
1	6/21/17	PT02.2 – Deck PT Plan – Main Span Details	RC
1	6/21/17	PT02.3 – Deck PT Plan – Back Span	RC
1	6/21/17	PT02.4 – Deck PT Plan – Back Span Profiles	RC
1	6/21/17	PT02.5 – Deck PT Plan – Back Span Details	RC
1	6/21/17	PT02.6 – Deck PT Plan – North Landing	RC
1	6/21/17	PT03 – Canopy PT Plan	RCN
1	6/21/17	PT03.1 – Canopy PT Details	RC
1	6/21/17	PT03.2 – Canopy PT Blockout Details	RC

1	6/21/17	PT03.3 – Canopy PT Blockout Details 2	RC
1	6/21/17	PT03.4 – Canopy PT Profile	RCN
1	6/21/17	PT04 – Truss System PT Bar Details	RCN
1	06/21/17	PT04.1 – Truss System PT Bar Details	RC
1	6/21/17	PT04.2 – PT Bar Blockout Details_Main Span	RC
1	6/21/17	PT04.3 – PT Bar Blockout Details 2	RC

CODE: **RC**: RELEASED FOR CONSTRUCTION; **RCN:** RELEASED FOR CONSTRUCTION AS NOTED; **R:** RESUBMIT

Reviewed: Chris Tavella

Signed: Chris Tavella

CC: Alfredo Reyna, Rafael Urdaneta

CC: Office File

FIU PEDESTRIAN BRIDGE 434688-1-58-01
PT DECK, CANOPY AND TRUSS SHOP DRAWING
SUMMARY OF REVIEW COMMENTS BY CEG 6/26/2017 from FDOT D6

SHEET ID	COMMENT
PT01.2	CALL OUT MATERIAL/ STEEL GRADE FOR LOCAL ZONE REINFORCEMENT IN TABLE.
PT01.2 & 01.4	LOCAL ZONE REINFORCEMENT HAS A 2" PITCH. THIS IS A VERY TIGHT SPACING. WILL ANY CONFLICTS BE PRESENT WITH MILD REINFORCEMENT IN THESE AREAS?
PT01.3 & 01.4	CALCULATIONS FOR SPIRAL USE GRADE 75 REBAR. CALL OUT FY=75KSI ON SHOP DRAWING.
PT01.4	THE LOCAL ZONE REINFORCEMENT CALCULATIONS PROVIDED ARE FOR THE 15" DIA SPIRAL. SHOW CALCULATIONS FOR THE 14" DIAMETER SPIRAL AS WELL.
PT01.5	PER SHEET B-38 & 42, STEEL ANCHOR PLATE FOR 1.375" PT BAR IS 5" X 10". VERIFY W/ EOR.
PT01.6	PER SHEET B-38 & 42, STEEL ANCHOR PLATE FOR 1.75" PT BAR IS 8" X 12". VERIFY W/ EOR.
PT01.7	PER SHEET B-38, STEEL ANCHOR PLATE FOR 2.5" PT BAR IS 12" X 14". VERIFY W/ EOR.
PT02	ELONGATION VALUES SHOWN ARE CALCULATED BY VSL AND DIFFER FROM PLAN SHEET B-69
PT02	4'-0 3/8" DIM DIFFERS FROM 4'-0 1/2" SHOWN ON SHEET B-60 AND END OF MAIN SPAN.
PT03	ELONGATION VALUES SHOWN ARE CALCULATED BY VSL AND DIFFER FROM PLAN SHEET B-69
PT03	PROVIDE SPACING DIMENSIONS FOR THE CANOPY BLISTERS SHOWN IN PLAN VIEW
PT03.4	SHOW 2'-0" SPACING IN 94FT BACK SPAN REGION.
PT04	BEARING PLATE SIZES SHOWN DIFFER FROM SHEETS B-38 & B-42. VERIFY W/ EOR.
PT04	100% THEORETICAL ELONGATION SHOWN FOR PT RODS DIFFERS FROM PLAN SHEET B-69. NO CALCULATIONS PROVIDED BY VSL. VERIFY W/ EOR.
PT04	DIAPHRAGM PT BAR. EOR TO VERIFY JACKING FORCE, STRESS SEQUENCE, PT BAR LENGTH AND ELONGATION SHOWN. INFORMATION NOT IN RFC PLANS.

PT BAR BEARING PLATE CALCULATIONS:
CALCULATIONS WERE PERFORMED USING BEARING PLATE DIMENSIONS DIFFERENT THAN THOSE SHOWN IN PLANS. EOR TO VERIFY THAT THESE BEARING PLATE DIMENSIONS SATISFY THE DESIGN INTENT.

LOCAL ZONE REINFORCEMENT DESIGN - 6-12 SYSTEM:
THE CALCULATIONS PROVIDED ARE FOR THE 15" DIA SPIRAL. SHOW CALCULATIONS FOR THE 14" DIAMETER SPIRAL AS WELL.

FIGG

FIGG M-010
Via E-mail

MEMORANDUM

TO: Mr. Rodrigo Isaza

FROM: Dwight D. Dempsey, P.E., S.E.

REFERENCE: UniversityCity Prosperity Project
Project ID BT-904
Submittal #000462-1.B, Post Tensioning – Deck, Canopy, Truss (Revised)
FIGG Project No. 2262.06

DATE: June 1, 2017

FIGG received Submittal #000462-1.B (24 drawings, 50 pages) for the referenced project on May 22, 2017 and revised drawings (7 drawings to supersede originals) on May 26, 2017. The submittal includes the transverse and longitudinal post tensioning details, layouts, and stressing data for the main span and back span deck, canopy, and truss. We have reviewed the submittal and offer the following comments:

- For the Member 10, 2-1/2" PT Bar Block-Out shown on shop drawing PT04.1, be aware that there are 1-3/8" bolts to attach the pipe support plate within the blockout. Bolts are spaced at 2'-1" transversely. Care shall be taken to ensure the bolts are not damaged when stressing the PT bars.

- For all locations, the design requires that the blister is cast monolithically with the canopy. It is recommended to use a template to correctly locate the bolts for the pipe support plates.

- For additional comments, see reviewed and stamped shop drawings.

All calculations are being returned "For Information Only". The shop drawings are being returned as "Accepted" (A) or "Accepted as Noted" (AN). See the table below for review status of each drawing.

Drawing No.	Drawing Title	Review Status
PT01	Multistrand General Notes	A
PT01.1	PT Bar General Notes	A
PT01.2	VSLAB 6-4 System Drawings	AN
PT01.3	ECI 6-12 System Drawings	A
PT01.4	ECI 6-19 System Drawings	A
PT01.5	1-3/8" PT Bar System Drawings	A

PT01.6	1-3/4" PT Bar System Drawings	A
PT01.7	2-1/2" PT Bar System Drawings	A
PT02	Deck PT Plan – Main Span	AN
PT02.1	Deck PT Plan – Main Span PT Profiles	A
PT02.2	Deck PT Plan – Main Span Details	AN
PT02.3	Deck PT Plan – Back Span	A
PT02.4	Deck PT Plan – Back Span Profiles	A
PT02.5	Deck PT Plan – Back Span Details	AN
PT02.6	Deck PT Plan – North Landing	AN
PT03	Canopy PT Plan	AN
PT03.1	Canopy PT Details	A
PT03.2	Canopy PT Blockout Details	AN
PT03.3	Canopy PT Blockout Details 2	A
PT03.4	Canopy PT Profile	AN
PT04	Truss System Details	AN
PT04.1	Truss System PT Bar Details	AN
PT04.2	PT Bar Blockout Details _ Main Span	A
PT04.3	PT Bar Blockout Details 2	A

Please let us know if you have any questions.

xc: Mr. Alan Ruiz, P.E.
Mr. W. Denney Pate, P.E.
Mr. Manuel Feliciano, P.E.

Submittal #000462-1.B
000462 - DIVISION 2 - POST-TENSIONING

6201 SW 70th Street 2nd Floor
Miami, Florida 33143
Phone: (305) 541-0000
Fax: (305) 541-9771

Project: 2015-711 - FIU - UCPP - DB Pedestrian Bridge
SW 109 Avenue & SW 8th Street
Miami, Florida 33174
Phone: 305-541-0000

Post Tensioning (Deck, Canopy & Truss)

SPEC SECTION:	000462 - DIVISION 2 - POST-TENSIONING	**CREATED BY:**	
STATUS:	Open	**DATE CREATED:**	05/22/2017
ISSUE DATE:	05/22/2017	**REVISION:**	B
RESPONSIBLE CONTRACTOR:	STRUCTURAL TECHNOLOGIES LLC	**RECEIVED FROM:**	
RECEIVED DATE:	//	**OWNER JOB NO.:**	BT-904
FINAL DUE DATE:	05/31/2017	**DAYS ELAPSED:**	
TYPE:		**MCM JOB NO.:**	**2015-711**

PRIORITY:

APPROVERS: Jose Morales **(Bolton Perez & Associates),** Dwight Dempsey **(FIGG Bridge Engineers)**

BALL IN COURT:
Dwight Dempsey **(FIGG Bridge Engineers)**

DISTRIBUTION:

DESCRIPTION:
Revised Post Tensioning (Deck, Canopy & Truss)

ATTACHMENTS:

SUBMITTAL WORKFLOW

#	NAME	SUBMITTER/ APPROVER	SENT DATE	DUE DATE	RETURNED DATE	RESPONSE	COMMENTS
1	Dwight Dempsey	Approver		5/24/2017		Pending	
2	Jose Morales	Approver		5/31/2017		Pending	

ENGINEERS & GENERAL CONTRACTORS

Review is for general conformance with the Contract Documents. Comments shall not be construed as relieving the supplier/subcontractor from strict compliance with such documents. The supplier/subcontractor remain responsible for details and accuracy, for complying with standards of the industry regarding fabrication, assembly, erection and installation procedures.

☑ REVIEWED ☐ REVISE & RESUBMIT
☐ REVIEWED AS NOTED ☐ REJECTED

By: AR Date: 5-22-2017

BY **DATE** **COPIES TO**

MULTISTRAND GENERAL NOTES

1.0 PRESTRESSING STEEL

1.1 PRESTRESSING STEEL SHALL BE 7-WIRE, LOW RELAXATION STRAND FOR PRESTRESSED CONCRETE MANUFACTURED IN ACCORDANCE WITH ASTM A416-GRADE 270.
NOMINAL DIAMETER.....0.60"
ASSUMED NOMINAL AREA.....0.217 SQ. IN.
ASSUMED MODULUS OF ELASTICITY.....28,500 KSI
GUARANTEED ULTIMATE TENSILE STRENGTH.....58.6 KIPS
MAX. TEMPORARY JACKING FORCE.....80% GUTS

2.0 ANCHORAGES

2.1 ANCHORAGES SHALL MEET THE MINIMUM REQUIREMENTS SET FORTH IN AASHTO & LRFD/FDOT SPECS.

2.2 BEARING PLATES SHALL BE PLACED PERPENDICULAR TO THE TENDON PATH AND SHALL BE SHIMMED AS NECESSARY.

2.3 GROUT FITTINGS AND ATTACHMENTS SHALL BE STANDARD PLASTIC PIPE OR FLEXIBLE PLASTIC TUBING AT THE PLACER'S OPTION. PERMANENT FITTINGS SHALL BE NON-METALLIC PER FDOT SPECS.

3.0 TENDON FABRICATION AND SHIPMENT

3.1 TENDONS SHALL BE FABRICATED WITH SUFFICIENT LENGTH BEYOND THE BEARING PLATE TO ALLOW STRESSING. A MINIMUM LENGTH OF STRAND IS REQUIRED AT ALL STRESSING ENDS FOR THE FOLLOWING ANCHORAGES:
ECI 6-19 - 48";
ECI 6-12 - 48";
VSLAB 6-4 - 24".

3.2 TENDONS SHALL BE FABRICATED AT JOBSITE OR OFFSITE.

3.3 EXCESSIVELY DAMAGED DUCT LENGTHS SHALL BE REMOVED AND REPLACED COMPLETELY, NOT REPAIRED.

3.4 EACH SHIPMENT SHALL BE ACCOMPANIED BY A LIST OF MATERIALS INDICATING: TOTAL NUMBER OF STRAND COILS, DUCT, COMPONENTS, EQUIPMENT, ETC. UPON RECEIPT OF THE MATERIAL AND EQUIPMENT SHIPMENT, THE RECEIVER SHALL VERIFY THE QUANTITIES ARE IN AGREEMENT WITH THE SHIPPING LISTS AND SHALL NOTIFY THE SHIPPER AND VSL OF ANY DISCREPANCIES.

3.5 MATERIALS SHALL BE ORDERED IN SUCH SEQUENCE AND QUANTITY TO ALLOW SHIPPING IN FULL TRUCKLOADS.

3.6 USE OF A NYLON SLING IS REQUIRED TO PREVENT DAMAGE TO THE MATERIALS DURING HANDLING. MATERIALS AND EQUIPMENT SHALL BE PROPERLY STORED AT THE JOBSITE TO PREVENT THEFT, DETERIORATION FROM WEATHER, ETC.

3.7 ALL PRESTRESSING COILS SHALL BE SATISFACTORILY PROTECTED AT THE JOBSITE AND WHEN STORED OFF THE JOBSITE FROM CORROSION AND DAMAGE. SUFFICIENT PROTECTION SHALL ALSO BE PROVIDED FOR EXPOSED IN-PLACE PRESTRESSING STEEL TO PREVENT EXCESSIVE DETERIORATION FROM CORROSION.

3.8 SHIPPING, HANDLING AND STORAGE OF COILS, DUCT & COMPONENTS SHALL MEET REQUIREMENTS SET FORTH IN FDOT SPECIFICATION 462.

4.0 TENDON PLACEMENT

1

4.1 DUCTS, BEARING PLATES, AND ANCHORAGE SPIRALS SHALL BE PLACED BY VSL ACCORDING TO THE QUANTITY AND SPACING SHOWN ON THE PLACING DRAWINGS. THE STRANDS SHALL BE INSTALLED AND STRESSED BY VSL.

4.2 DUCT IN CONCRETE SHALL BE SUPPORTED AT A MAXIMUM SPACING OF 24" FOR ROUND PLASTIC DUCT.

4.3 THE GENERAL CONTRACTOR SHALL PROVIDE SUFFICIENT BEAM FORMS FOR FASTENING BEARING PLATES. THE GENERAL CONTRACTOR SHALL PROVIDE ALL NECESSARY SHIMMING REQUIRED TO INSURE THAT BEARING PLATES ARE PLACED PERPENDICULAR TO TENDON PATH.

4.4 SECURE ATTACHMENT OF THE BEARING PLATES TO THE BEAM FORMS. ALL BOLTS SHALL BE TIGHTENED SECURELY.

4.5 THE ANCHORAGE SPIRAL AND TIES SHALL BE PLACED CONCENTRIC TO THE TRUMPET PROVIDING THE REQUIRED COVER TO THE BULKHEAD. THE SPIRAL PITCH SHALL NOT EXCEED THE PITCH ON THE SYSTEM DRAWINGS AT ANY POINT. FOR VSLAB SYSTEM, THE ANCHORAGE STEEL SPACING SHALL NOT EXCEED SPACING SHOWN ON THE SYSTEM DRAWING.

4.6 PLACEMENT OF MILD STEEL REINFORCEMENT SHALL BE COORDINATED WITH PLACEMENT OF POST-TENSIONING TENDONS. PROPER TENDON PLACEMENT HAS PRIORITY.

4.7 SUFFICIENT SUPPORT STEEL, IF NECESSARY, SHALL BE PROVIDED BY OTHERS. THESE BARS ARE USED TO PREVENT LATERAL AND VERTICAL MOVEMENT OF THE TENDONS DURING CONCRETE PLACEMENT.

4.8 ALL SUPPORT STEEL (BY OTHERS) AND POST-TENSIONING TENDONS SHALL BE FIRMLY SECURED IN FORMS TO OBTAIN DIMENSIONS AND LOCATIONS AS PROVIDED.

4.9 CONCRETE SHALL BE PLACED IN SUCH A MANNER AS TO INSURE THAT ALIGNMENT OF POST-TENSIONING TENDONS REMAINS UNCHANGED. SPECIAL PROVISIONS SHALL BE MADE TO INSURE PROPER CONSOLIDATION OF CONCRETE AROUND POST-TENSIONING ANCHORAGES

5.0 STRESSING

5.1 THE STRESSING OPERATIONS MUST BE UNDER THE IMMEDIATE CONTROL OF A PERSON EXPERIENCED IN THIS TYPE OF WORK; HE SHALL MAINTAIN A CLOSE CHECK AND RIGID CONTROL OF ALL OPERATIONS. SAFETY IS THE TOP PRIORITY!

5.2 ADEQUATE SCAFFOLDS, PLATFORMS, AND SAFETY DEVICES SHALL BE PROVIDED BY THE GENERAL CONTRACTOR AS REQUIRED BY GOVERNING JOBSITE STANDARDS, INSTALLATION, OR STRESSING PROCEDURES.

5.3 TAKE SAFETY PRECAUTIONS AS NECESSARY. DO NOT PERMIT ANYONE TO STAND BEHIND, ABOVE, OR BELOW RAMS WHILE STRESSING. ONLY ESSENTIAL PERSONNEL SHALL BE IN THE AREA.

5.4 ALL TENDONS SHALL BE STRESSED BY MEANS OF HYDRAULIC RAMS, EQUIPPED WITH CALIBRATED HYDRAULIC PRESSURE GAUGES. A CALIBRATION CHART SHALL ACCOMPANY EACH GAUGE. NOTE: RAMS AND GAUGES SHALL NOT BE INTERCHANGED.

5.5 THE STRANDS MAY BE FULLY STRESSED WHEN SHEAR KEY GROUT TEST CYLINDERS, CURED UNDER JOBSITE CONDITIONS, HAVE BEEN TESTED AND INDICATE THE SHEAR KEY GROUT HAS REACHED THE MINIMUM CYLINDER STRENGTH OF 6000PSI.

5.6 THE POST-TENSIONING OPERATION SHALL BE CONDUCTED SO THAT ACCURATE ELONGATION OF THE TENDONS CAN BE RECORDED AND COMPARED WITH THEORETICAL ELONGATIONS.

5.7 RECORDS OF ALL GAUGE PRESSURES AND ELONGATIONS SHALL BE SUBMITTED PROMPTLY TO THE ENGINEER FOR APPROVAL. IF MEASURED ELONGATIONS ARE NOT WITHIN +/-7% OF THE THEORETICAL ELONGATIONS, THE CAUSE OF THE DISCREPANCIES SHALL BE DETERMINED AND RESOLVED BY VSL, THE GENERAL CONTRACTOR AND THE ENGINEER OF RECORD AS PER FDOT SPECIFICATION 462.

5.8 PROPER ALIGNMENT OF THE ANCHORAGE AND JACKING EQUIPMENT IS MANDATORY DURING ALL STRESSING OPERATIONS.

5.9 REFERENCE POINT USED IN ELONGATION CALCULATION SHOULD BE SPRAY PAINTED OR PROPERLY MARKED ON STRANDS BEFORE STRESSING (POINT AT WHICH JACK WILL ENGAGE TENDONS). THE DISTANCE FROM THIS REFERENCE POINT TO THE ANCHORHEAD WORK POINT SHALL BE MEASURED FOR RECORD PRIOR TO STRESSING (WHAT LENGTH OF STRAND OUTSIDE OF ANCHORHEAD/STRUT WILL ELONGATE ADDITIONALLY).

5.10 STRESSING PROCEDURE (MULTISTRAND)
A) INSPECT RAM AND PUMP FOR LOOSE SCREWS, FITTINGS, ELECTRICAL AND HOSE CONNECTIONS AND TIGHTEN IF NECESSARY. CHECK JACK GRIPPERS TO INSURE THEY ARE CLEAN AND ALIGNED PROPERLY.
B) INSTALL ANCHOR HEAD AND INSTALL WEDGES INTO EACH WEDGE CAVITY (DO NOT REMOVE OILY FILM FROM WEDGES).
C) STRESS INITIALLY TO 20% OF Pjack AS INDICATED ON THE DRAWINGS TO REMOVE SLACK AND SEAT RAM.
D) MARK THE STRAND AT A PREDETERMINED DISTANCE FROM A FIXED POINT.
E) STRESS TO 100% OF PJACK. MEASURE ELONGATION FROM FIXED REFERENCE TO DATUM POINT ON STRAND. RECORD ELONGATION. ELONGATIONS ARE MEASURED PER TABLE ON PT02

1

F) RETRACT RAM AND REMOVE FROM TENDON. VERIFY WEDGES ARE SEATED ON BOTH ENDS.
G) PROMPTLY SUBMIT STRESSING RECORDS TO THE ENGINEER. UPON APPROVAL OF THE ELONGATIONS, STRESSING TAILS MAY BE REMOVED USING AN APPROVED METHOD TO APPROXIMATELY 3/4" FROM FACE OF ANCHORHEAD.
H) INSTALL GROUT FITTINGS AND PREPARE FOR GROUTING.

6.0 GROUTING

6.1 EQUIPMENT-COLLOIDAL MIXER/PUMP COMBINATION.
ACCESSORIES REQUIRED FOR ACCURATE MEASUREMENT OF QUANTITIES.
HOSE-1" I.D.
PRESSURE GAUGE AT PUMP.
PERMANENT FITTINGS SHALL BE NON-METALLIC.

6.2 GROUT MIX: EUCLID PTX OR BASF MASTERFLOW 1206

6.3 PATCH BACK BLOCKOUTS AT ANCHORAGE WITH PRE-APPROVED PATCHING MATERIAL (BY OTHERS) AS SOON AS PRACTICAL AFTER GROUTING.

6.4 GROUT TENDONS IN ACCORDANCE WITH FDOT SPECIFICATION 462.

7.0 MISCELLANEOUS

7.1 ALL EQUIPMENT AND PROCEDURES USED FOR HANDLING AND PLACING TENDONS SHALL NOT DAMAGE OR CAUSE DETERIORATION TO THE PRESTRESSING STEEL, DUCT, OR COMPONENTS.

7.2 ALL CONCRETE INSERTS MUST BE CAST-IN-PLACE. IF ADDITIONAL INSERTS ARE REQUIRED AFTER THE CONCRETE IS CAST, THE CONTRACTOR MUST LOCATE TENDONS AT THE SURFACE OF THE CONCRETE BEFORE DRIVING FASTENERS. IF THERE IS A RISK OF PENETRATING THE TENDON, WRITTEN APPROVAL MUST BE OBTAINED FROM THE ENGINEER PRIOR TO PENETRATING THE CONCRETE SURFACES.

7.3 ALL STRESSING RECESSES, CLOSURE STRIPS, AND APPROVAL JOINTS REQUIRED FOR ANCHORAGES MUST BE ADEQUATELY REINFORCED SO AS TO NOT DECREASE THE STRENGTH OF THE STRUCTURE. COLD JOINTS SHALL NOT INTERSECT ANCHORAGES.

STRESSING SAFETY GUIDELINES

1. THESE STRESSING SAFETY GUIDELINES APPLY TO ALL STRAND AND HIGH STRENGTH BAR TENDONS BUT ARE NOT INTENDED TO BE COMPLETE GUIDELINES ADDRESSING ALL CONSIDERATIONS REQUIRED TO MAINTAIN SAFETY. IT IS THE RESPONSIBILITY OF THE PLACER (THE CONTRACTOR PERFORMING STRESSING OPERATIONS) TO HAVE THE TRAINING AND EXPERIENCE IN ALL EQUIPMENT OPERATIONS AND SAFETY REQUIREMENTS NECESSARY TO PREVENT PROPERTY DAMAGE AND MAINTAIN THE SAFETY OF JOBSITE PERSONNEL AND THE GENERAL PUBLIC.
2. THE NON-STRESSING END OR DEAD END OF A TENDON MAY BE AS HAZARDOUS AS THE STRESSING END. SIMILAR PRECAUTIONS, SUCH AS PLYWOOD BARRIERS, SHOULD BE TAKEN AT BOTH ENDS AS DIRECTED BY THE PLACER.
3. WEDGES AND WEDGE CAVITIES MUST BE FREE OF CEMENT PASTE, DEBRIS AND CORROSION. THE NOSE OF THE RAM MUST PROPERLY SEAT AGAINST THE ANCHORAGE BEARING SURFACE. THE RAM MUST EXTEND PROPERLY AND NOT CONTACT OBSTRUCTIONS DURING STRESSING.
4. PROPER THREAD ENGAGEMENT OF HEX NUTS (INCLUDING LIVE AND DEAD ENDS) AND COUPLERS FOR HIGH STRENGTH BAR TENDONS MUST BE VERIFIED PRIOR TO STRESSING.
5. IMMEDIATELY CEASE STRESSING AND REMOVE ALL PERSONNEL FROM THE AREA IF ANY EXISTING CRACK WIDENING, NEW CONCRETE CRACKING, BEARING PLATE MOVEMENT, OR UNUSUAL SOUNDS ARE OBSERVED.
6. WORK ZONES SHALL BE DEFINED BY THE PLACER AND ONLY ESSENTIAL PERSONNEL SHALL OCCUPY THE WORK ZONES DURING STRESSING OPERATIONS.
7. HAZARD ZONES SHALL BE DEFINED BY THE PLACER AND ENTERING THE HAZARD ZONES SHALL BE AVOIDED DURING STRESSING OPERATIONS AND FOR A PERIOD OF TIME AFTER COMPLETION OF STRESSING OPERATIONS AS DIRECTED BY THE PLACER.
8. TOOLS, MATERIALS, AND EQUIPMENT NOT ESSENTIAL TO THE STRESSING OPERATION SHALL BE CLEARED FROM THE WORK AND HAZARD ZONES DURING STRESSING OPERATIONS. STRESSING EQUIPMENT SHALL BE SECURED TO PREVENT FALLING FROM ELEVATED AREAS IN THE EVENT OF A FAILURE.

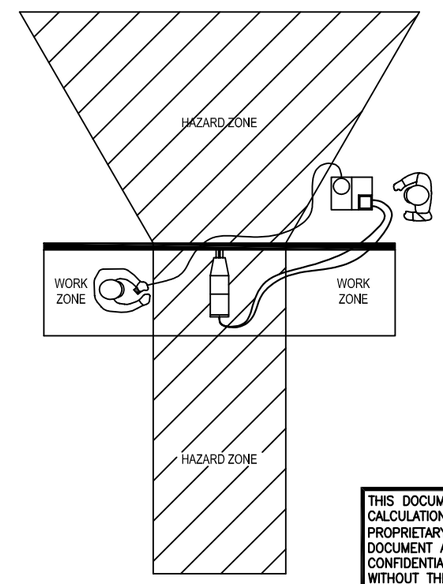

STRESSING SAFETY DETAIL

SHOP DRAWING REVIEW

_____ FOR INFORMATION ONLY
_X_ ACCEPTED
_____ ACCEPTED AS NOTED
_____ ACCEPTED AS NOTED & RESUBMIT
_____ NOT ACCEPTED

This review is only for general conformance with design intent of the project and general compliance with the information given in the contract documents. Review, corrections or comments made concerning the shop drawings during this review do not relieve the contractor from compliance with requirements of the drawings and specifications, nor relieve the contractor of contractual responsibility for any error or deviation from contract requirements. The contractor is responsible for confirming and correlating all quantities, dimensions and structural capabilities - Selecting fabrication processes and techniques of construction - Coordinating his work with that of all other trades - and performing his work in a safe and satisfactory manner.

FIGG Subconsultant:
Firm:
By:_____ Date:_____

FIGG BRIDGE ENGINEERS, Inc.
By: KLB Date: 5/25/2017

NOT FOR CONSTRUCTION

SHARATH MURTHY
LICENSE
No. 79039
STATE OF FLORIDA
PROFESSIONAL ENGINEER
5/19/17

THIS DOCUMENT, INCLUDING ANY DRAWINGS, SPECIFICATIONS, AND CALCULATIONS HEREIN, CONTAINS INFORMATION THAT IS PROPRIETARY TO STRUCTURAL TECHNOLOGIES LLC ("VSL"). THIS DOCUMENT AND THE INFORMATION CONTAINED HEREIN IS CONFIDENTIAL AND MAY NOT BE REPRODUCED OR DISCLOSED WITHOUT THE PRIOR WRITTEN CONSENT OF STRUCTURAL TECHNOLOGIES LLC ("VSL"). FURTHER, THE USE OF THIS DOCUMENT OR ANY INFORMATION PRESENTED HEREIN IS RESTRICTED TO THE SPECIFIC PROJECT AND PURPOSE FOR WHICH IT WAS PREPARED. ANY OTHER USE IS STRICTLY PROHIBITED. STRUCTURAL TECHNOLOGIES ("VSL") DISCLAIMS ANY LIABILITY FOR ANY UNAUTHORIZED, UNINTENDED, OR OTHER IMPERMISSIBLE USE OF THIS DOCUMENT OR ANY INFORMATION IT CONTAINS

Structural Technologies LLC (VSL) SHOP DRAWING
These shop drawings illustrate the details of the VSL Post-Tensioning System. They were prepared in conformance with the structural design provided to VSL by project owner or it's representative. VSL took no part in the preparation or review of said structural design and VSL DISCLAIMS ANY LIABILITY for it. The stamp or seal of a VSL employees on these shop drawings pertains only to the transfer of the forces required by the engineer of record on the structural drawings, and not to the adequacy of the structural design. NO WARRANTY, EXPRESSED OR IMPLIED, as to the adequacy of the structural design is made by virtue of any such stamp or seal.

NO.	DATE	DESCRIPTION	ISSUED FOR	BY	CHK
1	05/19/17	PER EOR COMMENT DATED 05/01/17	APPROVAL	GB	SM
0	04/28/17	PER 90% DRAWINGS DATED FEB.2017	APPROVAL	GP	SM

structural TECHNOLOGIES
A Structural Group Company
STRUCTURAL TECHNOLOGIES/VSL, LLC
Pompano Beach, FL office:
2001 Blount Road
Pompano Beach, FL 33069
Phone: 954/486-3991
Fax: 954/486-3992
Dallas, TX / Washington, DC / Denver, CO / Pompano Beach, FL / Atlanta, GA

MULTISTRAND GENERAL NOTES

FIU PEDESTRIAN BRIDGE
MIAMI, FL
MUNILLA CONSTRUCTION MANAGEMENT, LLC (MCM)

SCALE: NTS
JOB NO: 420582
SHEET: PT01

MCM

Review is for general conformance with the Contract Documents. Comments shall not be construed as relieving the supplier/subcontractor from strict compliance with such documents. The supplier/subcontractor remain responsible for details and accuracy, for complying with standards of the industry regarding fabrication, assembly, erection and installation procedures.

- [x] REVIEWED
- [ ] REVISE & RESUBMIT
- [ ] REVIEWED AS NOTED
- [ ] REJECTED

By: AR

Date: 05/22/17

RELEASED FOR CONSTRUCTION

Structures Design Office – District 6
Department of Transportation
STATE OF FLORIDA

Date: 06/26/17

Reviewed By: CEG

Review is for general conformance with Contract Documents. Sole responsibility for correctness of dimensions, details, quantities and safety during fabrication and erection shall remain with the Contractor.

PT BAR GENERAL NOTES

1. TECHNICAL DATA:

1.1 PRESTRESSING STEEL SHALL BE TYPE II (DEFORMED BARS) GRADE 150, MANUFACTURED IN CONFORMANCE WITH ASTM A722-98 (GRADE 1035)

1.2.A ROD PROPERTIES

1.375" DIAMETER ALL-THREAD BAR (GRADE 150 KSI)

NOMINAL DIAMETER	**1.375 IN**
CROSS-SECTIONAL AREA	**1.58 SQ IN**
MODULUS OF ELASTICITY (ASSUMED)	**29,000 KSI**
GUARANTEED ULTIMATE TENSILE STRENGTH	**237 KIPS**

1.2.B ROD PROPERTIES

1.75" DIAMETER ALL-THREAD BAR (GRADE 150 KSI)

NOMINAL DIAMETER	**1.75 IN**
CROSS-SECTIONAL AREA	**2.66 SQ IN**
MODULUS OF ELASTICITY (ASSUMED)	**29,000 KSI**
GUARANTEED ULTIMATE TENSILE STRENGTH	**400 KIPS**

1.2.C ROD PROPERTIES

2.5" DIAMETER ALL-THREAD BAR (GRADE 150 KSI)

NOMINAL DIAMETER	**2.5 IN**
CROSS-SECTIONAL AREA	**5.19 SQ IN**
MODULUS OF ELASTICITY (ASSUMED)	**29,000 KSI**
GUARANTEED ULTIMATE TENSILE STRENGTH	**778 KIPS**

1.2.D DUCT

1-3/8" BAR: PT + 59mm DIAMETER CORRUGATED DUCT.
1-3/4" BAR: PT + 76mm DIAMETER CORRUGATED DUCT.
2-1/2" BAR: PT + 85mm DIAMETER CORRUGATED DUCT.

1.2.E ANCHORAGE NUT AND BEARING PLATES SHALL MEET THE FOLLOWING MINIMUM REQUIREMENTS:

BEARING PLATE MATERIAL: ASTM A536 GRADE 80-55-06
HEX NUT: ASTM A29 GRADE C1045

1.3 DUCT MATERIAL SHALL BE CORRUGATED PLASTIC DUCT FOR INTERNAL TENDON. FOR EXTERNAL TENDONS PIPE TO BE SMOOTH HDPE PIPE. GROUT FITINGS TO BE PLASTIC FASTENERS. ALL GROUT INLETS & OUTLETS SHALL BE FITTED WITH A POSITIVE SHUTOFF.

2. P-T BAR FABRICATION:

2.1 P-T BAR WILL BE FABRICATED WITH LENGTH BEYOND BEARING PLATES TO ALLOW STRESSING AND HEX NUT INSTALLATION. THE PT BAR SHOULD PROTRUDE 1in. PAST THE HEX NUT AT ALL NON-STRESSING LOCATIONS. AT ALL STRESSING LOCATIONS THE PT BAR SHOULD PROTRUDE PAST THE HEX NUT A MINIMUM OF 4 IN. FOR ALL BARS.

2.2 ALL PRESTRESSING STEEL SHALL BE SATISFACTORILY PROTECTED AT THE JOBSITE.

2.3 CARE SHOULD BE TAKEN WHEN OFF LOADING AND STORING PT BARS. USE NYLON STRAPS DURING OFF LOADING & HANDLING OF PT BARS.

3. P-T BAR PLACEMENT:

3.1 P-T BAR, DUCT, AND BEARING PLATES SHALL BE PLACED ACCORDING TO NUMBER AND SPACING AS SHOWN ON THE PLACING DRAWINGS. (BY OTHERS)

3.2 P-T DUCT SHALL BE SUPPORTED EVERY 24" O.C.

3.3 THE GENERAL CONTRACTOR WILL PROVIDE SUFFICIENT END FORM BULKHEAD FOR FASTENING ANCHORS AND EXTENDING P-T DUCT THROUGH FORMS AT PROPER LOCATIONS AS REQUIRED FOR P-T BAR INSTALLATION.

3.4 PLACEMENT OF MILD STEEL REINFORCEMENT SHALL BE COORDINATED WITH PLACEMENT OF POST-TENSIONING BAR. PROPER P-T BAR PLACEMENT HAS PRIORITY.

3.5 CONCRETE SHALL BE PLACED IN SUCH A MANNER AS TO INSURE THAT ALIGNMENT OF POST-TENSIONING BARS REMAINS UNCHANGED. SPECIAL PROVISIONS SHALL BE MADE TO INSURE PROPER VIBRATION OF CONCRETE AROUND BEARING PLATES AND CONNECTIONS. EXTREME CARE MUST BE TAKEN TO AVOID DAMAGE TO DUCT. DUCT SHALL BE SUPPORTED IN ACCORDANCE W/ SECT. 462-7.2 OF FDOT SPECIFICATION.

3.6 ALIGNMENT OF BEARING PLATE SHALL BE NORMAL TO LONG AXIS OF THE P-T BAR.

4. TENSIONING:

4.1 ALL STRESSING WILL BE PERFORMED UNDER THE IMMEDIATE CONTROL OF A PERSON EXPERIENCED IN THIS TYPE OF WORK.

4.2 PLACE ALL MATERIAL AS SHOWN STRUCTURAL DETAILS, PLACING SEQUENCE MAY VARY DEPENDING ON CONSTRUCTION PROCEDURES AND AS APPROVED BY. THE ENGINEER.

4.3 ALL PRESTRESSING STEEL SHALL BE STRESSED BY MEANS OF THE VSL HYDRAULIC JACKS EQUIPPED WITH CALIBRATED HYDRAULIC PRESSURE GAUGES. A CALIBRATION CHART WILL ACCOMPANY EACH JACK.

4.4 THE POST-TENSIONING OPERATION WILL BE SO CONDUCTED THAT ACCURATE ELONGATION OF THE PRESTRESSING STEEL CAN BE RECORDED AND COMPARED WITH ELONGATIONS SUBMITTED TO AND APPROVED BY THE STRUCTURAL ENGINEER.

4.5 RECORDS SHALL BE KEPT OF ALL JACKING FORCES AND ELONGATIONS AND SUBMITTED PROMPTLY TO THE STRUCTURAL ENGINEER. ELONGATIONS SHALL BE MEASURED TO THE NEAREST 1/16".

4.6 STRESSING PROCEDURE:

A. RAM SHOULD BE OPEN APPROXIMATELY 1 IN. PRIOR TO STARTING.
B. MEASURE THE DISTANCE FROM A FIXED POINT TO A PREDETERMINED POINT ON THE P-T BAR. RECORD THE MEASUREMENT. TIGHTEN NUT AT STRESSING END SNUG TO BEARING PLATE.
C. STRESS BAR PER CONTRACT SPECIFICATIONS, WHILE SIMULTANEOUSLY SIMULTANEOUSLY TIGHTENING NUT AT STRESSING END.
D. TIGHTEN NUT AT STRESSING END SNUG TO BEARING PLATE PRIOR TO RELEASING THE JACK.
E. RETRACT RAM AND REMOVE FROM P-T BAR. MEASURE FROM ORIGINAL FIXED POINT TO PREDETERMINED POINT ON THE BAR. THE DIFFERENCE BETWEEN THIS MEASUREMENT AND THE ORIGINAL IS THE ELONGATION.
F. PERFORM LIFT-OFFS TO VERIFY FORCE ON P-T BARS AS NECESSARY.
G. CONTRACTOR SHALL SUBMIT THE GROUTING OPERATIONS PLAN AS REQUIRED BY SPECIFICATION 462-11 TO THE EOR FOR REVIEW AND APPROVAL.

4.7 TAKE SAFETY PRECAUTIONS AS NECESSARY. DO NOT PERMIT ANYONE TO STAND BEHIND JACKS OR OVER BAR WHILE STRESSING.

5. GROUTING:

5.1 REFER TO PROJECT SPECIFICATIONS FOR POST-TENSIONING GROUTING REQUIREMENTS

5.2 MATERIALS: EUCLID PTX OR MASTERFLOW 1206

5.3 MIX GROUT ACCORDING TO MANUFACTURER'S RECOMMENDATIONS & SPECIAL PROVISIONS

6. MISCELLANEOUS:

6.1 ALL EQUIPMENT USED FOR HANDLING AND PLACING P-T BARS SHALL BE SUCH THAT IT DOES NOT DAMAGE OR DETERIORATE THE PRESTRESSING STEEL OR THE ANCHOR PLATES.

6.2 THE CONTRACTOR SHALL CHECK ALL PLANS, SECTIONS, AND DETAILS SHOWN ON THE POST-TENSION DRAWINGS FOR CONFORMANCE WITH THE STRUCTURAL DRAWINGS. THE POST-TENSION DRAWINGS SHOW ONLY THE POST-TENSIONED ELEMENTS. SEE STRUCTURAL DRAWINGS FOR ALL OTHER LAYOUT DIMENSIONS, SIZES AND LOCATION. DISCREPANCIES, IF ANY, SHALL BE REPORTED TO THE ENGINEER FOR CLARIFICATION OR ADJUSTMENT BEFORE PROCEEDING WITH THE WORK.

6.3 IN THE EVENT THAT CERTAIN FEATURES OF THE CONSTRUCTION ARE NOT SHOWN ON THE DRAWINGS OR CALLED FOR IN GENERAL NOTES, THEN THEIR CONSTRUCTION SHALL BE OF THE SAME GENERAL CHARACTER AS SIMILAR CONDITIONS THAT ARE SHOWN OR SPECIFIED IN THE STRUCTURAL DESIGN.

6.4 VSL HAS NOT CHECKED OR DESIGNED PT BARS WITHIN PRECAST DECK AND THEREFORE DOES NOT ACCEPT RESPONSIBILITY FOR ADEQUACY OF SAID DESIGN.

6.5 A SEATING LOSS OF 0", WOBBLE COEFFICIENT OF ZERO, AND FRICTION COEFFICIENT OF ZERO HAVE BEEN ASSUMED IN ELONGATION CALCULATIONS.

6.6 REFER TO CONTRACT DRAWINGS FOR STRESSING SEQUENCE. MINIMUM CONCRETE STRENGTH AT TIME OF STRESSING FOR LONGITUDINAL PT BAR AND VERTICAL PT BAR IS 6000 PSI.

6.7 NOTE TO CONTRACTOR: IT IS OF UTMOST IMPORTANCE WHEN COUPLING PT BAR THAT BARS TO BE COUPLED ARE BUTTED UP TO EACH OTHER AND COUPLER IS CENTERED ON THE COUPLED PT BARS. IF NOT COUPLER MIGHT NOT FULLY DEVELOP INDUCED FORCES BY STRESSING IF NOT PLACED AS SHOWN.

SHOP DRAWING REVIEW

____ FOR INFORMATION ONLY
_X_ ACCEPTED
____ ACCEPTED AS NOTED
____ ACCEPTED AS NOTED & RESUBMIT
____ NOT ACCEPTED

This review is only for general conformance with design intent of the project and general compliance with the information given in the contract documents. Review, corrections or comments made concerning the shop drawings during this review do not relieve the contractor from compliance with requirements of the drawings and specifications, nor relieve the contractor of contractual responsibility for any error or deviation from contract requirements.
The contractor is responsible for confirming and correlating all quantities, dimensions and structural capabilities - Selecting fabrication processes and techniques of construction - Coordinating his work with that of all other trades - and performing his work in a safe and satisfactory manner.

FIGG Subconsultant:
Firm:
By: _____ Date: _____

FIGG BRIDGE ENGINEERS, Inc.
By: KLB Date: 5/25/2017

NOT FOR CONSTRUCTION

SHARATH MURTHY
LICENSE
No. 79039
STATE OF FLORIDA
PROFESSIONAL ENGINEER

THIS DOCUMENT, INCLUDING ANY DRAWINGS, SPECIFICATIONS, AND CALCULATIONS HEREIN, CONTAINS INFORMATION THAT IS PROPRIETARY TO STRUCTURAL TECHNOLOGIES LLC ("VSL"). THIS DOCUMENT AND THE INFORMATION CONTAINED HEREIN IS CONFIDENTIAL AND MAY NOT BE REPRODUCED OR DISCLOSED WITHOUT THE PRIOR WRITTEN CONSENT OF STRUCTURAL TECHNOLOGIES LLC ("VSL"). FURTHER, THE USE OF THIS DOCUMENT OR ANY INFORMATION PRESENTED HEREIN IS RESTRICTED TO THE SPECIFIC PROJECT AND PURPOSE FOR WHICH IT WAS PREPARED. ANY OTHER USE IS STRICTLY PROHIBITED. STRUCTURAL TECHNOLOGIES ("VSL") DISCLAIMS ANY LIABILITY FOR ANY UNAUTHORIZED, UNINTENDED, OR OTHER IMPERMISSIBLE USE OF THIS DOCUMENT OR ANY INFORMATION IT CONTAINS

Structural Technologies LLC (VSL) SHOP DRAWING
These shop drawings illustrate the details of the VSL Post-Tensioning System. They were prepared in conformance with the structural design provided to VSL by project owner or it's representative. VSL took no part in the preparation or review of said structural design and VSL DISCLAIMS ANY LIABILITY for it. The stamp or seal of a VSL employees on these shop drawings pertains only to the transfer of the forces required by the engineer of record on the structural drawings, and not to the adequacy of the structural design. NO WARRANTY, EXPRESSED OR IMPLIED, as to the adequacy of the structural design is made by virtue of any such stamp or seal.

NO.	DATE	DESCRIPTION	BY	CHK
1	05/19/17	PER EOR COMMENT DATED 05/01/17	GB	SM
0	04/28/17	PER 90% DRAWINGS DATED FEB.2017	GP	SM
		ISSUED FOR: APPROVAL		

structural TECHNOLOGIES
A Structural Group Company
STRUCTURAL TECHNOLOGIES/VSL, LLC
Pompano Beach, FL office:
2001 Blount Road
Pompano Beach, FL 33069
Phone: 954/486-3991
Fax: 954/486-3992
Dallas, TX / Washington, DC / Denver, CO / Pompano Beach, FL / Atlanta, GA

PT BAR GENERAL NOTES

FIU PEDESTRIAN BRIDGE
MIAMI, FL
MUNILLA CONSTRUCTION MANAGEMENT, LLC (MCM)

SCALE:	NTS
JOB NO:	420582
SHEET:	PT01.1

MCM

Review is for general conformance with the Contract Documents. Comments shall not be construed as relieving the supplier/subcontractor from strict compliance with such documents. The supplier/subcontractor remain responsible for details and accuracy, for complying with standards of the industry regarding fabrication, assembly, erection and installation procedures.

- [x] REVIEWED
- [ ] REVISE & RESUBMIT
- [ ] REVIEWED AS NOTED
- [ ] REJECTED

By: AR

Date: 05/22/17

RELEASED FOR CONSTRUCTION

Structures Design Office – District 6
Department of Transportation
STATE OF FLORIDA

Date: 06/26/17

Reviewed By: CEG

Review is for general conformance with Contract Documents. Sole responsibility for correctness of dimensions, details, quantities and safety during fabrication and erection shall remain with the Contractor.

LOCAL ZONE REINFORCEMENT HAS A 2" PITCH. THIS IS A VERY TIGHT SPACING. WILL ANY CONFLICTS BE PRESENT WITH MILD REINFORCEMENT IN THESE AREAS?

CALL OUT MATERIAL / STEEL GRADE FOR LOCAL ZONE REINFORCEMENT IN TABLE

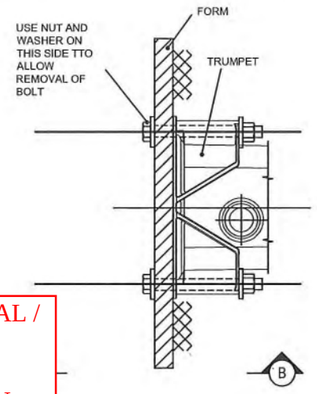

PLAN VIEW

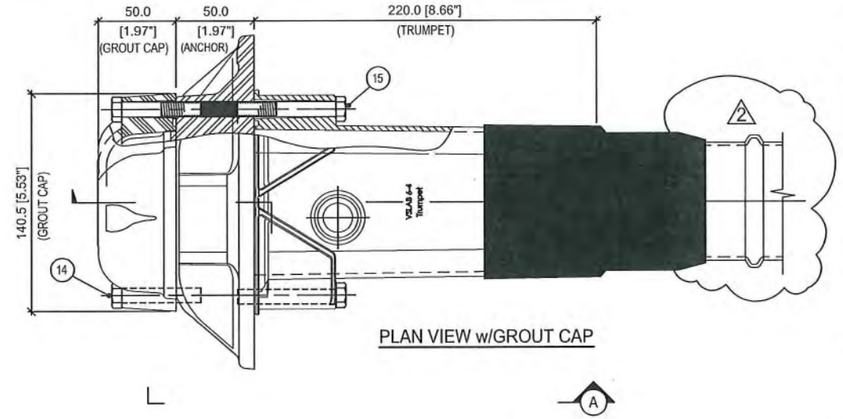

PLAN VIEW w/GROUT CAP

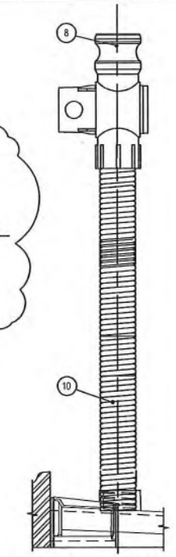

DETAIL 1-TYPICAL GROUTING ASSEMBLY

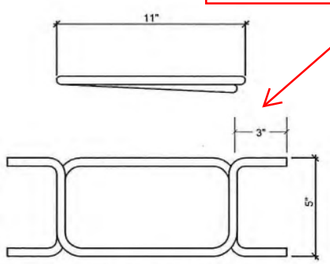

LOCAL ZONE REBAR DETAIL
#4 LOOPS
2.0" C/C TYP. SPACING
(TOTAL 6 PAIRS)

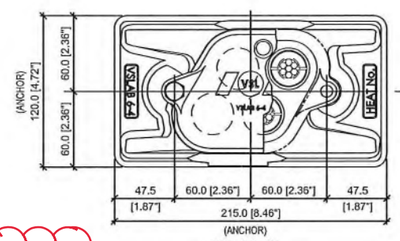

END VIEW

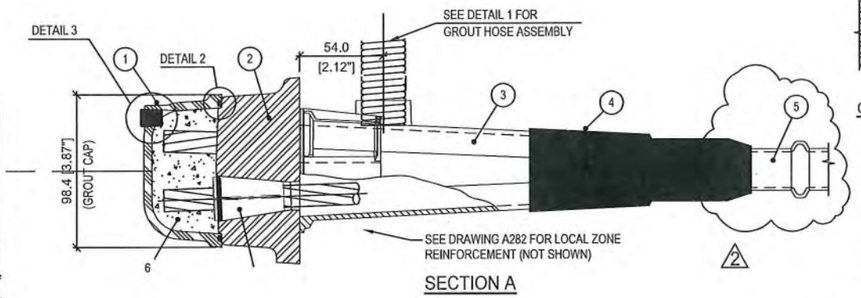

SECTION A

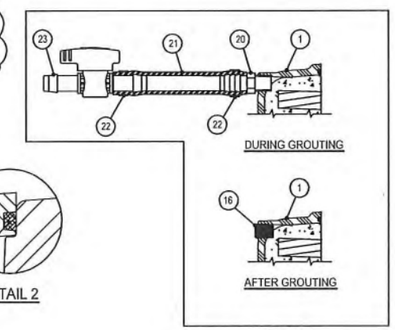

DETAIL 3

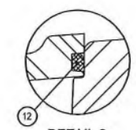

DETAIL 2

Pocket former not applicable for this type of transverse tendon.

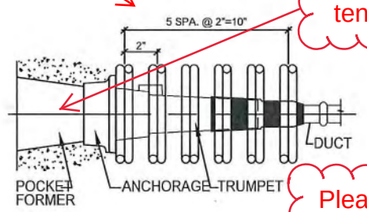

Please provide calculations for local zone reinforcement.

VSLAB 6-4 LOCAL ZONE REINFORCEMENT

3500 PSI CONCRETE BY OTHERS

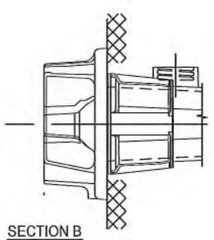

SECTION B

ITEM	QTY	DESCRIPTION	MATERIAL	INVENTORY No.
23	1	GROUT VENT VALVE, 1/2"	POLYPROPYLENE	2DT01914
22	2	SMALL ONE EAR BAND CLAMP	316 STAINLESS STEEL	2DT01904
21	A/R	1/2" ID SMOOTH GROUT HOSE	POLYPROPYLENE	2DT01920
20	1	1/4"MPT TO 1/2" HOSE BARB ADAPTER	POLYPROPYLENE	2DT01917
16	1	1/4"Ø NPT PLUG	POLYPROPYLENE	2DT01919
14	2	3/8"Ø UNC X 2" LONG HEX BOLT	316 STAINLESS STEEL	2VS06407
12	1	GROUT CAP QUAD-RING (-242)	BUNA-90 DURO	W/ GROUT CAP
10	-	GROUT HOSE, 23MM (21MM)	POLYETHYLENE	02DT0310
8	1	GROUT VALVE, 23mm	POLYSTYRENE	02DT0311
7	4	1.8G WEDGE, 0.6, 1.77" W/GROOVE	AISI 11L17	02WG0008
6	-	GROUT	JOB SPECIFIC	-
5	1	FLAT DUCT, 72/21 PT-PLUS	POLYPROPYLENE WHT	02DT0412
4	1	HEAT SHRINK SLEEVE (6" LONG)	POLYOLEFIN(CANUSA PLA-63-150-YE)	02DT0503
3	1	VSLAB 6-4 TRUMPET	POLYPROPYLENE BLACK	2BP4437
2	1	VSLAB 6-4 ANCHOR GALV.	DUCTILE IRON (60-55-06) GALV.	2VS06401
1	1	VSLAB 6-4 GROUT CAP	ABS 20% FIBER FILLED	02WX4010

LOCAL ZONE REINF. HAS SPACING PRIORITY.
CONCRETE STRENGTH f'ci=~~3500 PSI~~

6000 PSI per Sheet B-109

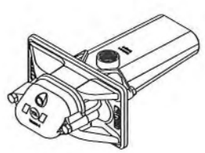

3D VIEW OF VSLAB 6-4 ANCHORAGE

SHOP DRAWING REVIEW

_____ FOR INFORMATION ONLY
_____ ACCEPTED
__X__ ACCEPTED AS NOTED
_____ ACCEPTED AS NOTED & RESUBMIT
_____ NOT ACCEPTED

This review is only for general conformance with design intent of the project and general compliance with the information given in the contract documents. Review, corrections or comments made concerning the shop drawings during this review do not relieve the contractor from compliance with requirements of the drawings and specifications, nor relieve the contractor of contractual responsibility for any error or deviation from contract requirements. The contractor is responsible for confirming and correlating all quantities, dimensions and structural capabilities - Selecting fabrication processes and techniques of construction - Coordinating his work with that of all other trades - and performing his work in a safe and satisfactory manner.

FIGG Subconsultant:
Firm:
By: _____ Date: _____

FIGG BRIDGE ENGINEERS, Inc.
By: KLB Date: 5/25/2017

NO.	DATE	DESCRIPTION	ISSUED FOR	BY	CHK
2	02/28/17	PER MCM-VSL MEETING ON 05/25/17	APPROVAL	GP	SM
1	03/19/17	PER EOR COMMENT DATED 05/01/17	APPROVAL	GB	SM
0	04/28/17	PER IFC DRAWINGS DATED FEB.2017	APPROVAL	GP	SM

structural TECHNOLOGIES
A Structural Group Company
STRUCTURAL TECHNOLOGIES/VSL LLC
Pompano Beach, FL office
2001 Blount Road
Pompano Beach, FL 33069
Phone: 954/429-2001
Fax: 954/429-2922
Dallas, TX / Washington, DC / Denver, CO / Pompano Beach, FL / Atlanta, GA

VSLAB 6-4
SYSTEM DRAWING

FIU PEDESTRIAN BRIDGE
MIAMI, FL
MUNILLA CONSTRUCTION MANAGEMENT, LLC (MCM)

SCALE: NTS
JOB NO: 420582
SHEET: PT01.2

THIS DOCUMENT, INCLUDING ANY DRAWINGS, SPECIFICATIONS, AND CALCULATIONS HEREIN, CONTAINS INFORMATION THAT IS PROPRIETARY TO STRUCTURAL TECHNOLOGIES LLC ("VSL"). THIS DOCUMENT AND THE INFORMATION CONTAINED HEREIN IS CONFIDENTIAL AND MAY NOT BE REPRODUCED OR DISCLOSED WITHOUT THE PRIOR WRITTEN CONSENT OF STRUCTURAL TECHNOLOGIES LLC ("VSL"). FURTHER, THE USE OF THIS DOCUMENT OR ANY INFORMATION PRESENTED HEREIN IS RESTRICTED TO THE SPECIFIC PROJECT AND PURPOSE FOR WHICH IT WAS PREPARED. ANY OTHER USE IS STRICTLY PROHIBITED. STRUCTURAL TECHNOLOGIES ("VSL") DISCLAIMS ANY LIABILITY FOR ANY UNAUTHORIZED, UNINTENDED, OR OTHER IMPERMISSIBLE USE OF THIS DOCUMENT OR ANY INFORMATION IT CONTAINS

Structural Technologies LLC (VSL) SHOP DRAWING
These shop drawings illustrate the details of the VSL Post-Tensioning System. They were prepared in conformance with the structural design provided to VSL by project owner or it's representative. VSL took no part in the preparation or review of said structural design and VSL DISCLAIMS ANY LIABILITY for it. The stamp or seal of a VSL employees on these shop drawings pertains only to the transfer of the forces required by the engineer of record on the structural drawings, and not to the adequacy of the structural design. NO WARRANTY, EXPRESSED OR IMPLIED, as to the adequacy of the structural design is made by virtue of any such stamp or seal.

NOT FOR CONSTRUCTION

SHARATH MURTHY
LICENSE
No. 79039
STATE OF FLORIDA
PROFESSIONAL ENGINEER

MCM

Review is for general conformance with the Contract Documents. Comments shall not be construed as relieving the supplier/subcontractor from strict compliance with such documents. The supplier/subcontractor remain responsible for details and accuracy, for complying with standards of the industry regarding fabrication, assembly, erection and installation procedures.

- [x] REVIEWED
- [ ] REVISE & RESUBMIT
- [ ] REVIEWED AS NOTED
- [ ] REJECTED

By: AR

Date: 05/22/17

RELEASED FOR CONSTRUCTION AS NOTED

Structures Design Office – District 6
Department of Transportation
STATE OF FLORIDA

Date: 6/27/17

Reviewed By: CEG

Review is for general conformance with Contract Documents. Sole responsibility for correctness of dimensions, details, quantities and safety during fabrication and erection shall remain with the Contractor.

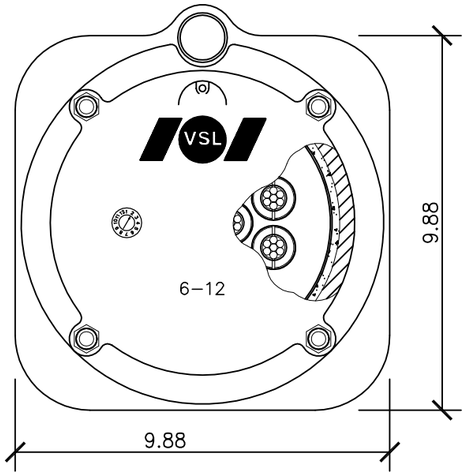

FRONT VIEW

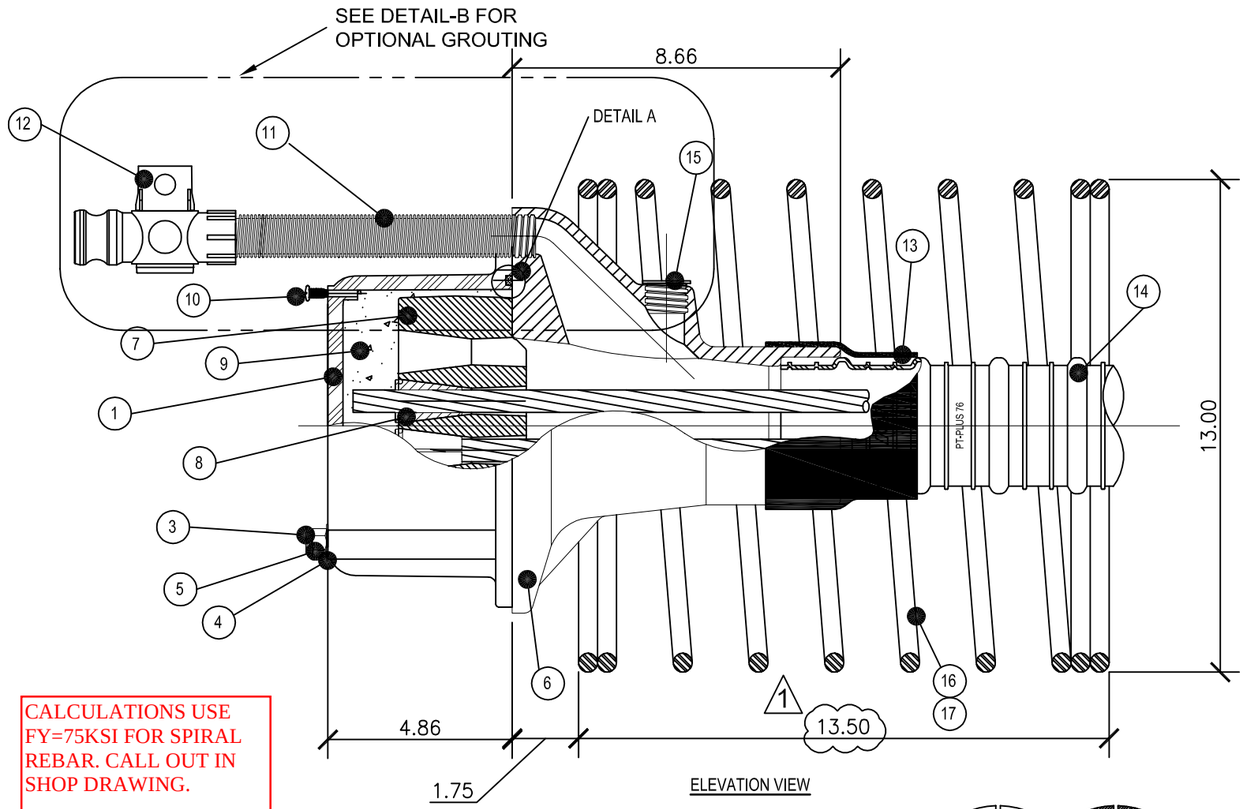

ELEVATION VIEW

CALCULATIONS USE FY=75KSI FOR SPIRAL REBAR. CALL OUT IN SHOP DRAWING.

ITEM	QTY	DESCRIPTION	MATERIAL	DRAWING REFERENCE	INVENTORY NUMBER
17*	1	SPIRAL, #4, DIA. 13", 3" PITCH, 7 TURNS	A615	-	02BP0097
16*	1	SPIRAL, #5, DIA. 13", 3" PITCH, 7 TURNS	A615	-	02BP0096
15	1	BEARING PLATE GROUT PLUG, 23MM	P.P.	C583	02DT0341
14	1	DUCT, WHT PP, 76 MM PT-PLUS	P.P.	E0937-3	02DT0426
13	1	HEAT SHRINK SLEEVE	POLYOLEFIN	(CANUSA) PLA 90 YE	02DT0505
12	1	GROUT VALVE, 23 MM	P.S.	C589 & C590	02DT0311
11		GROUT HOSE, 23 MM (21 MM)	P.E.	C587	02DT0310
10	1	CAP VENT PLUG, SS-SCREW	STAINLESS STEEL	-	02WX7001
9		GROUT	JOB SPECIFIC	-	-
8	12	1.6G WEDGE	11-L-17	C218	02WG0008
7	1	ECI 6-12 ANCHOR HEAD	A536 GR80-55-06	C556	02AH0037
6	1	ECI 6-12 GALV BEARING PLATE	A536 GR80-55-06	C553	02BP0037
5	4	1/2"-13 NUT	(316L) STAINLESS	-	INCLUDED W/02WX5021
4	4	Ø1/2" FLAT WASHER	(316L) STAINLESS	-	INCLUDED W/02WX5021
3	4	1/2-13 NC x 6 1/2"	(316L) STAINLESS	-	02WX5021
2	1	O-RING (.210 CS X 7.475" ID # -367)	BUNA-N 70 D.	-	02WX5020
1	1	GROUT CAP	ABS LUSTRAN 633	C548	02WX5019

* USE ITEM 16 FOR CONCRETE WITH fc' = 3500 psi, ITEM 17 FOR CONCRETE WITH fc' = 5500 psi

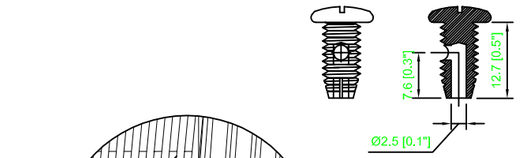

CAP VENT PLUG DETAIL

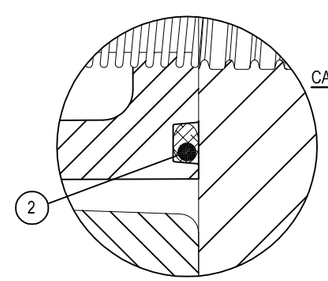

DETAIL A
SCALE: 1:1

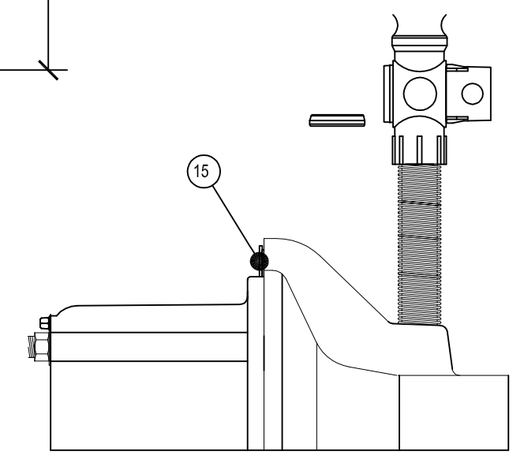

DETAIL-B GROUTING THRU DECK
SCALE: 1:4

SHOP DRAWING REVIEW

_____ FOR INFORMATION ONLY
X ACCEPTED
_____ ACCEPTED AS NOTED
_____ ACCEPTED AS NOTED & RESUBMIT
_____ NOT ACCEPTED

This review is only for general conformance with design intent of the project and general compliance with the information given in the contract documents. Review, corrections or comments made concerning the shop drawings during this review do not relieve the contractor from compliance with requirements of the drawings and specifications, nor relieve the contractor of contractual responsibility for any error or deviation from contract requirements. The contractor is responsible for confirming and correlating all quantities, dimensions and structural capabilities - Selecting fabrication processes and techniques of construction - Coordinating his work with that of all other trades - and performing his work in a safe and satisfactory manner.

FIGG Subconsultant:
Firm:
By: _____ Date: _____

FIGG BRIDGE ENGINEERS, Inc.
By: KLB Date: 5/25/2017

NO.	DATE	DESCRIPTION	BY	CHK
1	05/19/17	PER EOR COMMENT DATED 05/01/17	GB	SM
0	04/26/17	PER 90% DRAWINGS DATED FEB.2017	GP	SM
		ISSUED FOR		

structural TECHNOLOGIES
A Structural Group Company
STRUCTURAL TECHNOLOGIES/VSL LLC
Pompano Beach, FL office:
2001 Blount Road
Pompano Beach, FL 33069
Phone: 954/489-3991
Fax: 954/489-3992
Dallas, TX / Washington, DC / Denver, CO / Pompano Beach, FL / Atlanta, GA

ECI 6-12
SYSTEM DRAWINGS

FIU PEDESTRIAN BRIDGE
MIAMI, FL
MUNILLA CONSTRUCTION MANAGEMENT, LLC (MCM)

SCALE: NTS
JOB NO: 420582
SHEET: PT01.3

NOT FOR CONSTRUCTION

SHARATH MURTHY
LICENSE
No. 79039
STATE OF FLORIDA
PROFESSIONAL ENGINEER

THIS DOCUMENT, INCLUDING ANY DRAWINGS, SPECIFICATIONS, AND CALCULATIONS HEREIN, CONTAINS INFORMATION THAT IS PROPRIETARY TO STRUCTURAL TECHNOLOGIES LLC ("VSL"). THIS DOCUMENT AND THE INFORMATION CONTAINED HEREIN IS CONFIDENTIAL AND MAY NOT BE REPRODUCED OR DISCLOSED WITHOUT THE PRIOR WRITTEN CONSENT OF STRUCTURAL TECHNOLOGIES LLC ("VSL"). FURTHER, THE USE OF THIS DOCUMENT OR ANY INFORMATION PRESENTED HEREIN IS RESTRICTED TO THE SPECIFIC PROJECT AND PURPOSE FOR WHICH IT WAS PREPARED. ANY OTHER USE IS STRICTLY PROHIBITED. STRUCTURAL TECHNOLOGIES ("VSL") DISCLAIMS ANY LIABILITY FOR ANY UNAUTHORIZED, UNINTENDED, OR OTHER IMPERMISSIBLE USE OF THIS DOCUMENT OR ANY INFORMATION IT CONTAINS

Structural Technologies LLC (VSL) SHOP DRAWING
These shop drawings illustrate the details of the VSL Post–Tensioning System. They were prepared in conformance with the structural design provided to VSL by project owner or it's representative. VSL took no part in the preparation or review of said structural design and VSL DISCLAIMS ANY LIABILITY for it. The stamp or seal of a VSL employees on these shop drawings pertains only to the transfer of the forces required by the engineer of record on the structural drawings, and not to the adequacy of the structural design. NO WARRANTY, EXPRESSED OR IMPLIED, as to the adequacy of the structural design is made by virtue of any such stamp or seal.

MCM

Review is for general conformance with the Contract Documents. Comments shall not be construed as relieving the supplier/subcontractor from strict compliance with such documents. The supplier/subcontractor remain responsible for details and accuracy, for complying with standards of the industry regarding fabrication, assembly, erection and installation procedures.

- [x] REVIEWED
- [ ] REVISE & RESUBMIT
- [ ] REVIEWED AS NOTED
- [ ] REJECTED

By: AR

Date: 05/22/17

RELEASED FOR CONSTRUCTION AS NOTED

Structures Design Office – District 6
Department of Transportation
STATE OF FLORIDA

Date: 6/27/17

Reviewed By: CEG

Review is for general conformance with Contract Documents. Sole responsibility for correctness of dimensions, details, quantities and safety during fabrication and erection shall remain with the Contractor.

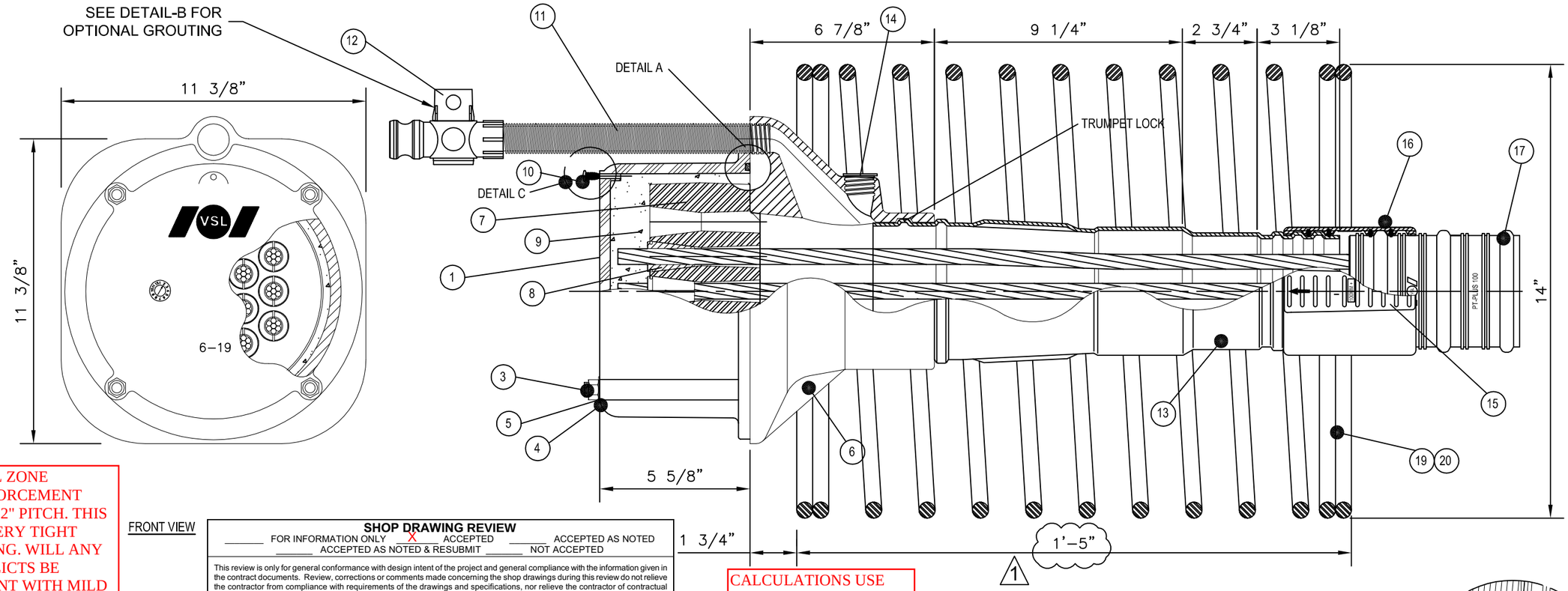

FRONT VIEW

ELEVATION VIEW

LOCAL ZONE REINFORCEMENT HAS A 2" PITCH. THIS IS A VERY TIGHT SPACING. WILL ANY CONFLICTS BE PRESENT WITH MILD REINFORCEMENT IN THESE AREAS?

SHOP DRAWING REVIEW

_____ FOR INFORMATION ONLY X ACCEPTED _____ ACCEPTED AS NOTED
_____ ACCEPTED AS NOTED & RESUBMIT _____ NOT ACCEPTED

This review is only for general conformance with design intent of the project and general compliance with the information given in the contract documents. Review, corrections or comments made concerning the shop drawings during this review do not relieve the contractor from compliance with requirements of the drawings and specifications, nor relieve the contractor of contractual responsibility for any error or deviation from contract requirements. The contractor is responsible for confirming and correlating all quantities, dimensions and structural capabilities - Selecting fabrication processes and techniques of construction - Coordinating his work with that of all other trades - and performing his work in a safe and satisfactory manner.

FIGG BRIDGE ENGINEERS, INC. By: KLB Date: 5/25/2017

CALCULATIONS USE FY=75KSI FOR SPIRAL REBAR. CALL OUT IN SHOP DRAWING.

THE LOCAL ZONE REINFORCEMENT CALCULATIONS PROVIDED ARE FOR THE 15" DIA SPIRAL. SHOW CALCULATIONS FOR THE 14" DIAMETER SPIRAL AS WELL.

ITEM	QTY	DESCRIPTION	MATERIAL	INVENTORY NUMBER
20*	1	SPIRAL, #5, DIA. 14", 2" PITCH, 10.5 TURNS	A615	0SP61903
19*	1	SPIRAL, #5, DIA. 15", 2" PITCH, 10.5 TURNS	A615	02BP0094
17	1	DUCT, WHT PP, 100 mm PT-PLUS	ASTM D4101	02DT0443
16	2	COUPLER HALF, 100 mm PT-PLUS	PP	02DT0044
15	2	COUPLER CLAMP, 100 mm PT-PLUS	PP	02DT0046
14	1	BEARING PLATE GROUT PLUG, 23 mm	HDPE	02DT0341
13	1	ECI 6-19 TRUMPET	P.P.	02BP4322
12	1	GROUT VALVE, 23 mm	P.S.	02DT0311
11		GROUT HOSE, 23 mm (21 mm)	P.E.	02DT0310
10	1	CAP VENT PLUG - SS SCREW	STAINLESS STEEL	02WX7001
9		GROUT	JOB SPECIFIC	
8	19	1.6G WEDGE	11-L-17	02WG0008
7	1	ECI 6-19 ANCHOR HEAD	A536 GR80-55-06	02AH0038
6	1	ECI 6-19 GALV BEARING PLATE	A536 GR80-55-06	02BP0038
5	4	1/2"-13 NUT	(316L) STAINLESS	INCLUDED W/ 02WX5033
4	4	Ø1/2" FLAT WASHER	(316L) STAINLESS	INCLUDED W/ 02WX5033
3	4	1/2-13 NC x 7"	(316L) STAINLESS	02WX5033
2	1	O-RING (.210 CS X 8.975" ID #-373)	BUNA-N 70 D.	02WX6020
1	1	6-19 GROUT CAP	ABS LUSTRAN 633	02WX6019

* USE ITEM 20 FOR CONCRETE WITH fc' = 6500 psi; USE ITEM 19 FOR CONCRETE WITH fc' = 5500 psi

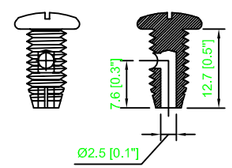

DETAIL-C CAP VENT PLUG DETAIL

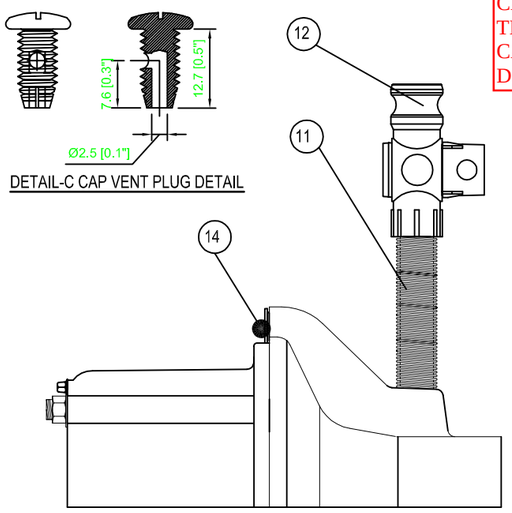

DETAIL-B GROUTING THRU DECK

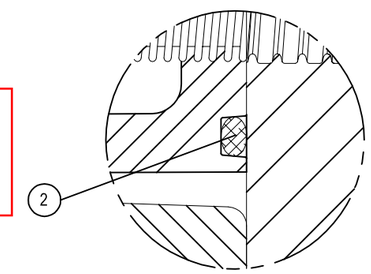

DETAIL A
N.T.S.

NOT FOR CONSTRUCTION

SHARATH MURTHY LICENSE No. 79039 STATE OF FLORIDA PROFESSIONAL ENGINEER

THIS DOCUMENT, INCLUDING ANY DRAWINGS, SPECIFICATIONS, AND CALCULATIONS HEREIN, CONTAINS INFORMATION THAT IS PROPRIETARY TO STRUCTURAL TECHNOLOGIES LLC ("VSL"). THIS DOCUMENT AND THE INFORMATION CONTAINED HEREIN IS CONFIDENTIAL AND MAY NOT BE REPRODUCED OR DISCLOSED WITHOUT THE PRIOR WRITTEN CONSENT OF STRUCTURAL TECHNOLOGIES LLC ("VSL"). FURTHER, THE USE OF THIS DOCUMENT OR ANY INFORMATION PRESENTED HEREIN IS RESTRICTED TO THE SPECIFIC PROJECT AND PURPOSE FOR WHICH IT WAS PREPARED. ANY OTHER USE IS STRICTLY PROHIBITED. STRUCTURAL TECHNOLOGIES ("VSL") DISCLAIMS ANY LIABILITY FOR ANY UNAUTHORIZED, UNINTENDED, OR OTHER IMPERMISSIBLE USE OF THIS DOCUMENT OR ANY INFORMATION IT CONTAINS

Structural Technologies LLC (VSL) SHOP DRAWING

These shop drawings illustrate the details of the VSL Post–Tensioning System. They were prepared in conformance with the structural design provided to VSL by project owner or it's representative. VSL took no part in the preparation or review of said structural design and VSL DISCLAIMS ANY LIABILITY for it. The stamp or seal of a VSL employees on these shop drawings pertains only to the transfer of the forces required by the engineer of record on the structural drawings, and not to the adequacy of the structural design. NO WARRANTY, EXPRESSED OR IMPLIED, as to the adequacy of the structural design is made by virtue of any such stamp or seal.

NO.	DATE	DESCRIPTION	BY	CHK
1	05/19/17	PER EOR COMMENT DATED 05/01/17	GB	SM
0	04/26/17	PER SOC DRAWINGS DATED FEB.2017	GP	SM
		ISSUED FOR		
		APPROVAL		
		APPROVAL		

structural TECHNOLOGIES A Structural Group Company
STRUCTURAL TECHNOLOGIES, LLC Pompano Beach, FL Office: 2001 Barrett Road Pompano Beach, FL 33069 Phone: 954/499–3901 Fax: 954/499–3902
Dallas, TX / Washington, DC / Denver, CO / Pompano Beach, FL / Atlanta, GA

ECI 6-19
SYSTEM DRAWINGS

FIU PEDESTRIAN BRIDGE
MIAMI, FL
MUNILLA CONSTRUCTION MANAGEMENT, LLC (MCM)

SCALE: NTS
JOB NO: 420582
SHEET: PT01.4

MCM

Review is for general conformance with the Contract Documents. Comments shall not be construed as relieving the supplier/subcontractor from strict compliance with such documents. The supplier/subcontractor remain responsible for details and accuracy, for complying with standards of the industry regarding fabrication, assembly, erection and installation procedures.

- [x] REVIEWED
- [ ] REVISE & RESUBMIT
- [ ] REVIEWED AS NOTED
- [ ] REJECTED

By: AR

Date: 05/22/17

RELEASED FOR CONSTRUCTION AS NOTED

Structures Design Office – District 6
Department of Transportation
STATE OF FLORIDA

Date: 6/27/17

Reviewed By: CEG

Review is for general conformance with Contract Documents. Sole responsibility for correctness of dimensions, details, quantities and safety during fabrication and erection shall remain with the Contractor.

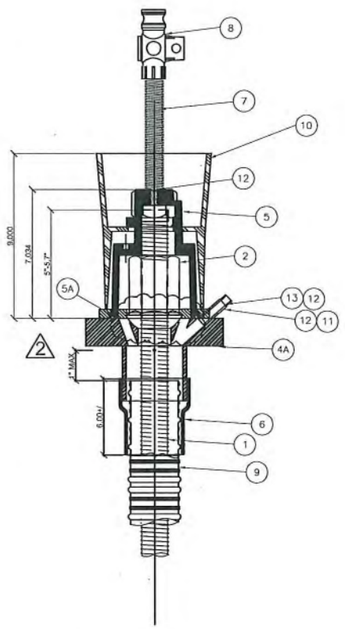

LIVE END

PER SHEET B-38 & 42, STEEL ANCHOR PLATE FOR 1.375" PT BAR IS 5" X 10". VERIFY W/ EOR.

ITEM	DESCRIPTION	MATERIAL	MODEL PART No.
1	WMS. 1.375" ø PT BARS , 150 kSI, ASTM722 TYPE II	ASTM A-722-97,M275	R71-11
2	WMS. HEAVY DUTY SPHERICAL HEX NUTS	ASTM A-29-93A GRADE C-1045	R73-11
3	WMS. HARDENED WASHER	ASTM F-436-93, TYPE 1, AASHTO M293	R9F-12-436
*4A	STEEL BEARING PLATE 6" x 6" x 1.5" w/ GROUT HOLE & TRUMPET, A36 GALV.	ASTM A-36-01, ASTM M183, ASTM A-53, ASTM A-512	–
*4B	STEEL BEARING PLATE 6" x 6" x 1.5" w/ TRUMPET, A36 GALV.	ASTM A-36-01, ASTM M183, ASTM A-53, ASTM A-512	–
**4C	STEEL BEARING PLATE 8" x 8.5" x 2" w/ GROUT HOLE & TRUMPET, A36 GALV.	ASTM A-36-01, ASTM M183, ASTM A-53, ASTM A-512	–
**4D	STEEL BEARING PLATE 8" x 8.5" x 2" w/ TRUMPET, A36 GALV.	ASTM A-36-01, ASTM M183, ASTM A-53, ASTM A-512	–
5	WMS. NYLON REINFORCED END CAP	ASTM D-4066, S PA-0221, ASTM D-5989, S PA-0231	R78k113607
5A	WMS. NYLON REINFORCED END CAP O – RING .70 DUROMETER BUNA-N 800347-002	BUNA-N .70 D	–
6	CANUSATUBE HEAT SHRINKABLE TUBING WITH FUSION BONDED EPOXY ADHESIVE PLA63 X 6"	POLYOLEFIN	CANUSA PLA-63-YE
7	GROUT HOSE, 23mm (21mm)	P.E.	02DT0310
8	GROUT VALVE 23mm	P.S.	02DT0311
9	PT + 59mm CORRUGATED PLASTIC DUCT	P.P.	02DT0412
10	POCKET FORMER	–	–
11	¼" PIPE SCH. 40 X 2" INSPECTION PORT	–	PURCHASED ITEM
12	NYLON GAS PLUMMERS TAPE FOR ALL THREAD FIT SEAL	–	PURCHASED ITEM
13	STD ¼"-18NPT PIPE COUPLING PURCHASED ITEM	–	PURCHASED ITEM
14	PT-PLUS 59MM COUPLER W/ VENT	ASTM D4101	02DT0013-15
15	WMS. JAM NUT	ASTM A29	R73

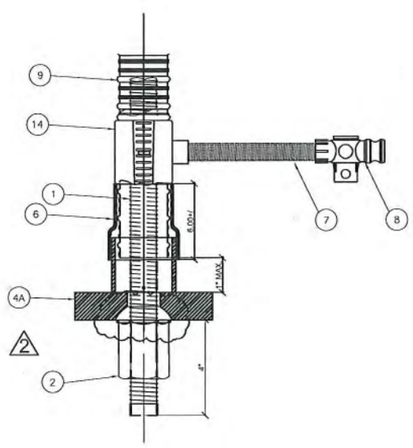

DEAD END

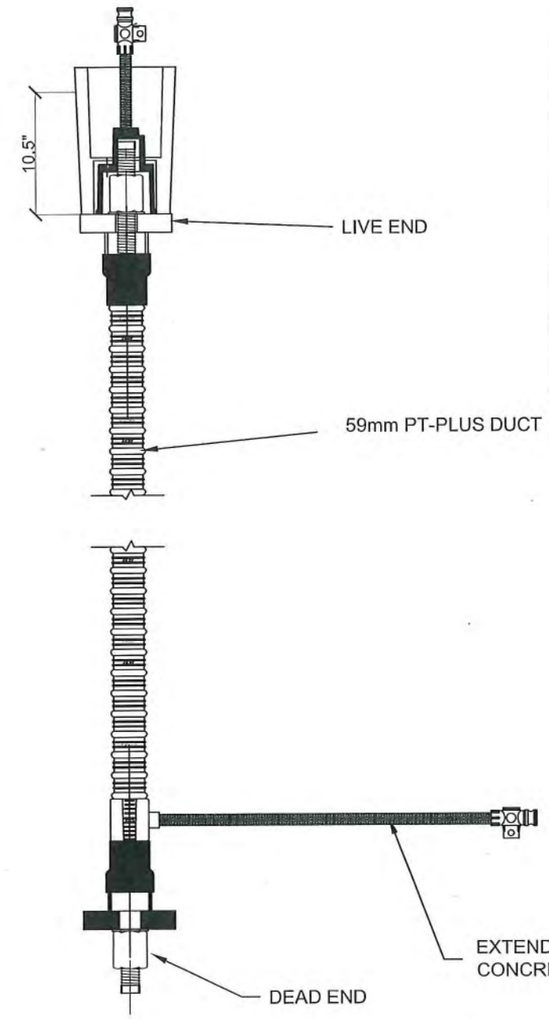

TENDON LAYOUT

SHOP DRAWING REVIEW

____ FOR INFORMATION ONLY
X ACCEPTED
____ ACCEPTED AS NOTED
____ ACCEPTED AS NOTED & RESUBMIT
____ NOT ACCEPTED

This review is only for general conformance with design intent of the project and general compliance with the information given in the contract documents. Review, corrections or comments made concerning the shop drawings during this review do not relieve the contractor from compliance with requirements of the drawings and specifications, nor relieve the contractor of contractual responsibility for any error or deviation from contract requirements. The contractor is responsible for confirming and correlating all quantities, dimensions and structural capabilities - Selecting fabrication processes and techniques of construction - Coordinating his work with that of all other trades - and performing his work in a safe and satisfactory manner.

FIGG Subconsultant:
Firm:
By: _____ Date: _____

FIGG BRIDGE ENGINEERS, Inc.
By KLB Date 5/25/2017

NO.	DATE	DESCRIPTION	BY	CHK
2	05/25/17	PER MCM-VSL MEETING 05/25/17	GP	SM
1	05/15/17	PER EOR COMMENT DATED 05/01/17	GB	SM
0	04/25/17	PER SOR DRAWINGS DATED FEB.2017	GP	SM
		ISSUED FOR		
		APPROVAL		
		APPROVAL		
		APPROVAL		

structural TECHNOLOGIES
A Structural Group Company
STRUCTURAL TECHNOLOGIES/VSL, LLC
Pompano Beach, FL office:
2001 Blount Road
Pompano Beach, FL 33069
Phone: 954/480-3991
Fax: 954/480-3992
Dallas, TX / Washington, DC / Denver, CO / Pompano Beach, FL / Atlanta, GA

1-3/8" PT BAR SYSTEM DRAWINGS

FIU PEDESTRIAN BRIDGE
MIAMI, FL
MUNILLA CONSTRUCTION MANAGEMENT, LLC (MCM)

THIS DOCUMENT, INCLUDING ANY DRAWINGS, SPECIFICATIONS, AND CALCULATIONS HEREIN, CONTAINS INFORMATION THAT IS PROPRIETARY TO STRUCTURAL TECHNOLOGIES LLC ("VSL"). THIS DOCUMENT AND THE INFORMATION CONTAINED HEREIN IS CONFIDENTIAL AND MAY NOT BE REPRODUCED OR DISCLOSED WITHOUT THE PRIOR WRITTEN CONSENT OF STRUCTURAL TECHNOLOGIES LLC ("VSL"). FURTHER, THE USE OF THIS DOCUMENT OR ANY INFORMATION PRESENTED HEREIN IS RESTRICTED TO THE SPECIFIC PROJECT AND PURPOSE FOR WHICH IT WAS PREPARED. ANY OTHER USE IS STRICTLY PROHIBITED. STRUCTURAL TECHNOLOGIES ("VSL") DISCLAIMS ANY LIABILITY FOR ANY UNAUTHORIZED, UNINTENDED, OR OTHER IMPERMISSIBLE USE OF THIS DOCUMENT OR ANY INFORMATION IT CONTAINS

Structural Technologies LLC (VSL) SHOP DRAWING
These shop drawings illustrate the details of the VSL Post-Tensioning System. They were prepared in conformance with the structural design provided to VSL by project owner or it's representative. VSL took no part in the preparation or review of said structural design and VSL DISCLAIMS ANY LIABILITY for it. The stamp or seal of a VSL employees on these shop drawings pertains only to the transfer of the forces required by the engineer of record on the structural drawings, and not to the adequacy of the structural design. NO WARRANTY, EXPRESSED OR IMPLIED, as to the adequacy of the structural design is made by virtue of any such stamp or seal.

NOT FOR CONSTRUCTION

SHARATH MURTHY
LICENSE
No. 79039
STATE OF FLORIDA
PROFESSIONAL ENGINEER
5/25/17

SCALE:	NTS
JOB NO:	420582
SHEET:	PT01.5

MCM

Review is for general conformance with the Contract Documents. Comments shall not be construed as relieving the supplier/subcontractor from strict compliance with such documents. The supplier/subcontractor remain responsible for details and accuracy, for complying with standards of the industry regarding fabrication, assembly, erection and installation procedures.

- [x] REVIEWED
- [ ] REVISE & RESUBMIT
- [ ] REVIEWED AS NOTED
- [ ] REJECTED

By: AR

Date: 05/22/17

RELEASED FOR CONSTRUCTION AS NOTED

Structures Design Office – District 6
Department of Transportation
STATE OF FLORIDA

Date: 6/27/17

Reviewed By: CEG

Review is for general conformance with Contract Documents. Sole responsibility for correctness of dimensions, details, quantities and safety during fabrication and erection shall remain with the Contractor.

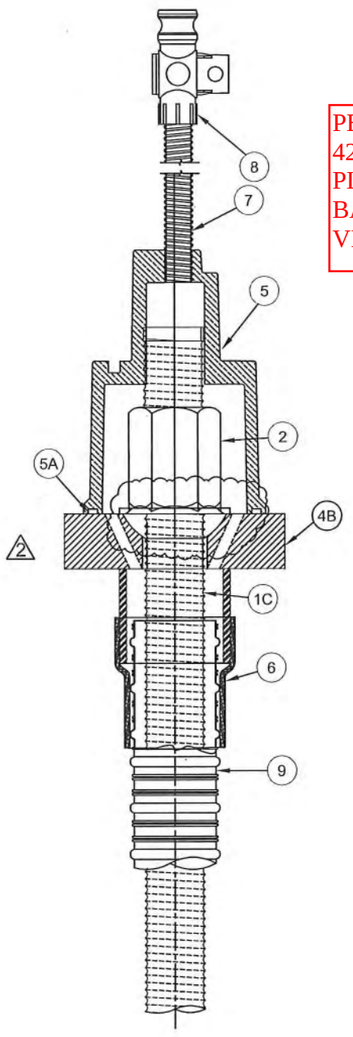

STRESSING END

PER SHEET B-38 & 42, STEEL ANCHOR PLATE FOR 1.375" PT BAR IS 8" X 12". VERIFY W/ EOR.

ITEM	DESCRIPTION	MODEL PART No.
1A	PT BARS 1" ø RODS	R71-09
1B	PT BARS 1.375" ø RODS	R71-14
1C	PT BARS 1.75" ø RODS	R71-11
2 (△2)	WMS. SPHERICAL HEX NUT	R9F-12-436 / R9F-16-436
4A*	STEEL BEARING PLATE 7" x 7" x 1.75" w/ GROUT HOLE AND TRUMPET	–
4B*	STEEL BEARING PLATE 8" x 8" x 2" w/ TRUMPETS	–
4C*	STEEL BEARING PLATE 9" x 9" x 2.25" W/ GROUT HOLE AND TRUMPET	–
4D*	STEEL BEARING PLATE 9" x 9" x 2.25" w/ TRUMPET	–
4E*	STEEL BEARING PLATE 5.5" x 5.5" x 1.5" w/ GROUT HOLE AND TRUMPET	–
4F*	STEEL BEARING PLATE 5.5" x 5.5' x 1.5" w/ TRUMPETS	–
5	NYLON REINFORCED END CAP	PURCHASED ITEM
5A	NYLON REINFORCED END CAP O – RING	PURCHASED ITEM
6	CANUSATUBE HEAT SHRINKABLE TUBING WITH FUSION BONDED EPOXY ADHESIVE.	–
7	GROUT HOSE, 23mm (21mm)	020T0311
8	GROUT VALVE 23mm	020T0310
9	PT + 76mm CORRUGATED PLASTIC DUCT	–
10	JAM NUT	–
11	POCKET FORMER	–
12	COUPLER W/ CLAMPS & VENT	–

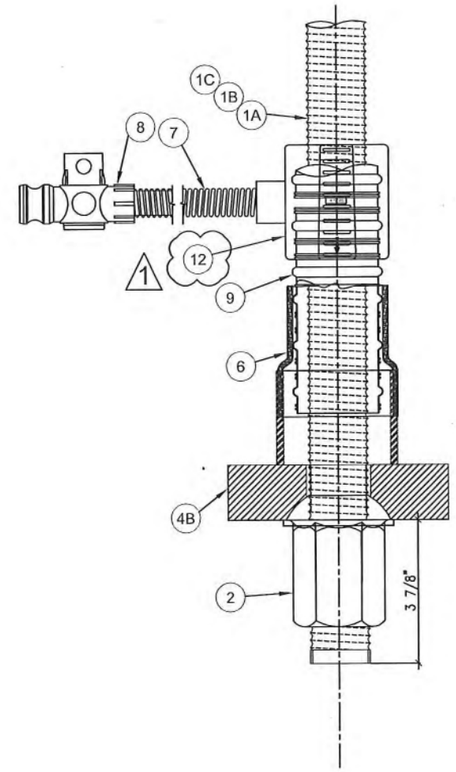

DEAD END

SHOP DRAWING REVIEW

_____ FOR INFORMATION ONLY
X ACCEPTED
_____ ACCEPTED AS NOTED
_____ ACCEPTED AS NOTED & RESUBMIT
_____ NOT ACCEPTED

This review is only for general conformance with design intent of the project and general compliance with the information given in the contract documents. Review, corrections or comments made concerning the shop drawings during this review do not relieve the contractor from compliance with requirements of the drawings and specifications, nor relieve the contractor of contractual responsibility for any error or deviation from contract requirements. The contractor is responsible for confirming and correlating all quantities, dimensions and structural capabilities - Selecting fabrication processes and techniques of construction - Coordinating his work with that of all other trades - and performing his work in a safe and satisfactory manner.

FIGG Subconsultant:
Firm:
By: _____ Date: _____

FIGG BRIDGE ENGINEERS, Inc.
By: KLB Date: 5/25/2017

NO.	DATE	DESCRIPTION	BY	CHK
	03/24/17	PER MEETING 03/23/17	GP	GM
1	05/19/17	PER EOR COMMENT DATED 05/01/17	GB	SM
0	04/28/17	PER 90% DRAWINGS DATED FEB.2017	GP	SM
		ISSUED FOR	BY	CHK
		APPROVAL	GP	GM
		APPROVAL	GB	SM
		APPROVAL	GP	SM

structural TECHNOLOGIES
A Subsidiary Group Company
STRUCTURAL TECHNOLOGIES, LLC
Pompano Beach, FL office
2001 Bond Road
Pompano Beach, FL 33069
Phone: 954/489-3901
Fax: 954/489-3902
Dallas, TX / Washington, DC / Denver, CO / Pompano Beach, FL / Atlanta, GA

1-3/4" PT BAR
SYSTEM DRAWINGS

FIU PEDESTRIAN BRIDGE
MIAMI, FL
MUNILLA CONSTRUCTION MANAGEMENT, LLC (MCM)

NOT FOR CONSTRUCTION

SHARATH MURTHY
LICENSE
No. 79039
STATE OF FLORIDA
PROFESSIONAL ENGINEER

THIS DOCUMENT, INCLUDING ANY DRAWINGS, SPECIFICATIONS, AND CALCULATIONS HEREIN, CONTAINS INFORMATION THAT IS PROPRIETARY TO STRUCTURAL TECHNOLOGIES LLC ("VSL"). THIS DOCUMENT AND THE INFORMATION CONTAINED HEREIN IS CONFIDENTIAL AND MAY NOT BE REPRODUCED OR DISCLOSED WITHOUT THE PRIOR WRITTEN CONSENT OF STRUCTURAL TECHNOLOGIES LLC ("VSL"). FURTHER, THE USE OF THIS DOCUMENT OR ANY INFORMATION PRESENTED HEREIN IS RESTRICTED TO THE SPECIFIC PROJECT AND PURPOSE FOR WHICH IT WAS PREPARED. ANY OTHER USE IS STRICTLY PROHIBITED. STRUCTURAL TECHNOLOGIES ("VSL") DISCLAIMS ANY LIABILITY FOR ANY UNAUTHORIZED, UNINTENDED, OR OTHER IMPERMISSIBLE USE OF THIS DOCUMENT OR ANY INFORMATION IT CONTAINS

Structural Technologies LLC (VSL) SHOP DRAWING
These shop drawings illustrate the details of the VSL Post-Tensioning System. They were prepared in conformance with the structural design provided to VSL by project owner or it's representative. VSL took no part in the preparation or review of said structural design and VSL DISCLAIMS ANY LIABILITY for it. The stamp or seal of a VSL employees on these shop drawings pertains only to the transfer of the forces required by the engineer of record on the structural drawings, and not to the adequacy of the structural design. NO WARRANTY, EXPRESSED OR IMPLIED, as to the adequacy of the structural design is made by virtue of any such stamp or seal.

SCALE: NTS
JOB NO: 420582
SHEET: PT01.6

MCM

Review is for general conformance with the Contract Documents. Comments shall not be construed as relieving the supplier/subcontractor from strict compliance with such documents. The supplier/subcontractor remain responsible for details and accuracy, for complying with standards of the industry regarding fabrication, assembly, erection and installation procedures.

- [x] REVIEWED
- [ ] REVISE & RESUBMIT
- [ ] REVIEWED AS NOTED
- [ ] REJECTED

By: AR

Date: 05/22/17

RELEASED FOR CONSTRUCTION AS NOTED

Structures Design Office – District 6
Department of Transportation
STATE OF FLORIDA

Date: 6/27/17

Reviewed By: CEG

Review is for general conformance with Contract Documents. Sole responsibility for correctness of dimensions, details, quantities and safety during fabrication and erection shall remain with the Contractor.

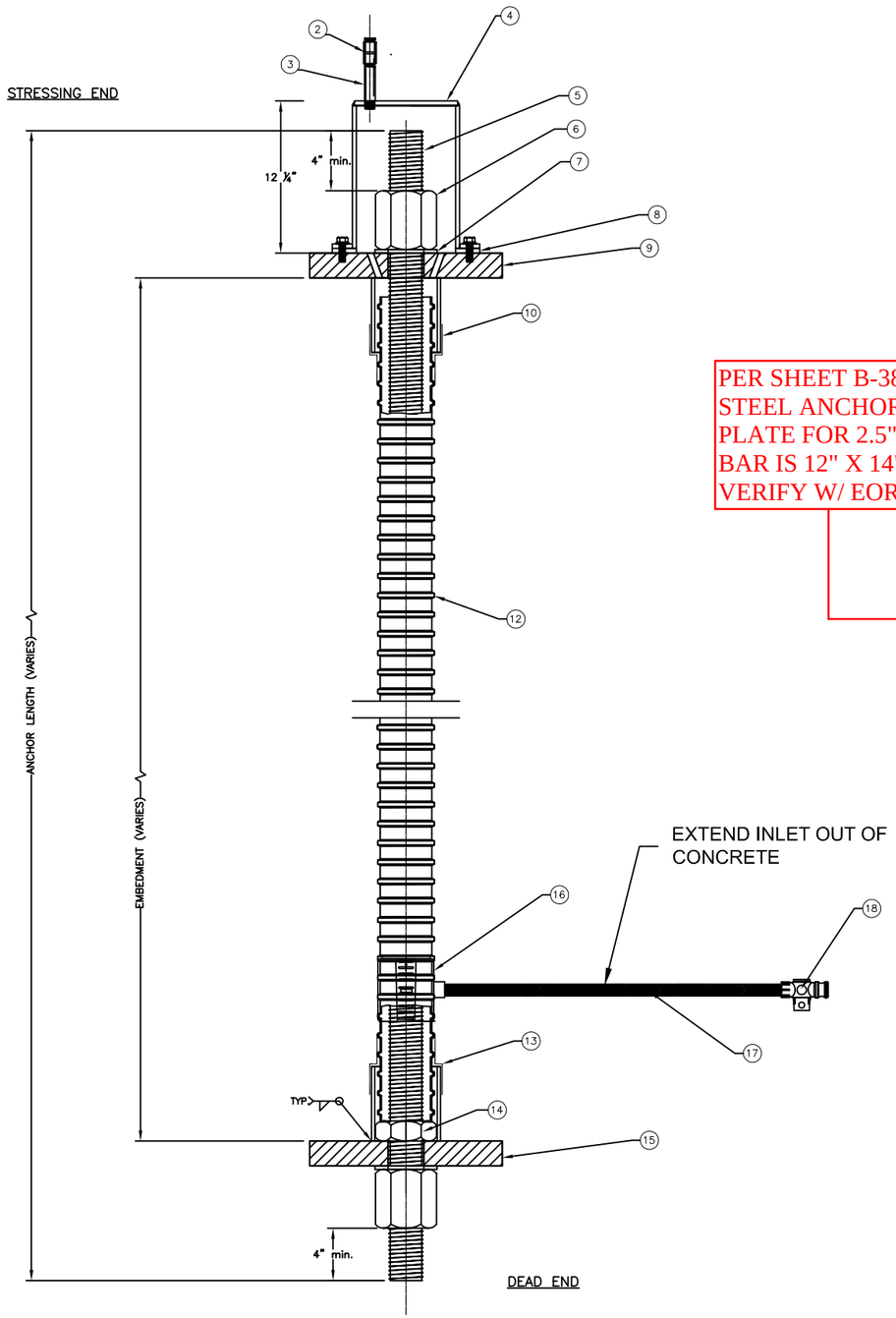

NOTE: FILED APPLY TEFLON TAPE SEAL TO ALL THREADED NPT CONNECTIONS

PER SHEET B-38, STEEL ANCHOR PLATE FOR 2.5" PT BAR IS 12" X 14". VERIFY W/ EOR.

ITEM	DESCRIPTION
2	½" –14 NPT COUPLING
3	½" –14 NPT PIPE NIPPLE x 3" LONG
4	Sch. GALV 40 STEEL PIPE: ASTM A–53 GRADE B or A–500 FLANGED END CAP BOLTING TO ANCHOR BEARING PLT w/ (4) ½" –13 GR5 ZINC HEX HEAD BOLTS
5	WMS. 65mm (2 1/2" nom. RH) R71–20RH GRADE 150 KSI ALL–THREAD–BAR, ASTM A–722 TYPE II, AASHTO M275.
6	WMS. 65mm (2 1/2" nom. RH) R73–20RH GR150 HEAVY DUTY HEX NUT: ASTM A–29, GRADE C–1045 (4 ¼" A.F. x 4 ¾" THK.)
7	WMS. 65mm (2 1/2" nom.) R9F–22 HARDENED WASHER: ASTM F–436, TYPE I, AASHTO M293 (5" OD x 2 ⅞" ID x 9/32" THK)
8	BUNA–RUBBER GASKET BETWEEN BEARING PLATE AND FLANGE PLATE
9	WMS. BEARING PLATE, ASTM A–36, AASHTO M183, 10"x10"x2 ¼" w/ 2 ⅞" DIA. CENTER HOLE FOR 65mm (2 ½" nom.) GR150 A.T.B. AND (4) HOLES TAPPED ½" –13 UNC FOR FLANGE END CAP HOT–DIP GALVANIZED, ASTM A–123
10	FIELD APPLY HEAT–SHRINK SEAL
12	PT + 85mm DUCT
13	FIELD APPLY HEAT–SHRINK SEAL
14	WMS. JAM NUT
15	WMS. BEARING PLATE, ASTM A–36, AASHTO M183 w/ 2 ⅞" DIA. CENTER HOLE FOR 65mm (2 ½" nom.) GR150 A.T.B. AND (4) HOLES TAPPED ½" –13 UNC FOR FLANGE END CAP HOT–DIP GALVANIZED, ASTM A–123
16	PT–PLUS 85mm COUPLER W/ VENT
17	GROUT HOSE, 23mm (21mm)
18	GROUT VALVE 23mm

SHOP DRAWING REVIEW

_____ FOR INFORMATION ONLY
_X_ ACCEPTED
_____ ACCEPTED AS NOTED
_____ ACCEPTED AS NOTED & RESUBMIT
_____ NOT ACCEPTED

This review is only for general conformance with design intent of the project and general compliance with the information given in the contract documents. Review, corrections or comments made concerning the shop drawings during this review do not relieve the contractor from compliance with requirements of the drawings and specifications, nor relieve the contractor of contractual responsibility for any error or deviation from contract requirements.
The contractor is responsible for confirming and correlating all quantities, dimensions and structural capabilities - Selecting fabrication processes and techniques of construction - Coordinating his work with that of all other trades - and performing his work in a safe and satisfactory manner.

FIGG Subconsultant:
Firm:
By: _____ Date: _____

FIGG BRIDGE ENGINEERS, Inc.
By: KLB Date: 5/25/2017

NOT FOR CONSTRUCTION

SHARATH MURTHY
LICENSE
No. 79039
STATE OF FLORIDA
PROFESSIONAL ENGINEER

THIS DOCUMENT, INCLUDING ANY DRAWINGS, SPECIFICATIONS, AND CALCULATIONS HEREIN, CONTAINS INFORMATION THAT IS PROPRIETARY TO STRUCTURAL TECHNOLOGIES LLC ("VSL"). THIS DOCUMENT AND THE INFORMATION CONTAINED HEREIN IS CONFIDENTIAL AND MAY NOT BE REPRODUCED OR DISCLOSED WITHOUT THE PRIOR WRITTEN CONSENT OF STRUCTURAL TECHNOLOGIES LLC ("VSL"). FURTHER, THE USE OF THIS DOCUMENT OR ANY INFORMATION PRESENTED HEREIN IS RESTRICTED TO THE SPECIFIC PROJECT AND PURPOSE FOR WHICH IT WAS PREPARED. ANY OTHER USE IS STRICTLY PROHIBITED. STRUCTURAL TECHNOLOGIES ("VSL") DISCLAIMS ANY LIABILITY FOR ANY UNAUTHORIZED, UNINTENDED, OR OTHER IMPERMISSIBLE USE OF THIS DOCUMENT OR ANY INFORMATION IT CONTAINS

Structural Technologies LLC (VSL) SHOP DRAWING
These shop drawings illustrate the details of the VSL Post–Tensioning System. They were prepared in conformance with the structural design provided to VSL by project owner or it's representative. VSL took no part in the preparation or review of said structural design and VSL DISCLAIMS ANY LIABILITY for it. The stamp or seal of a VSL employees on these shop drawings pertains only to the transfer of the forces required by the engineer of record on the structural drawings, and not to the adequacy of the structural design. NO WARRANTY, EXPRESSED OR IMPLIED, as to the adequacy of the structural design is made by virtue of any such stamp or seal.

NO.	DATE	DESCRIPTION	BY	CHK
1	05/19/17	PER EOR COMMENT DATED 05/01/17	GM	SM
0	04/26/17	PER 90% DRAWINGS DATED FEB.2017	GP	SM
		ISSUED FOR		

structural TECHNOLOGIES
A Structural Group Company
STRUCTURAL TECHNOLOGIES, LLC
Pompano Beach, FL Office:
2001 Blount Road
Pompano Beach, FL 33069
Phone: 954/499–3901
Fax: 954/499–3902
Dallas, TX / Washington, DC / Denver, CO / Pompano Beach, FL / Atlanta, GA

2-1/2" PT BAR
SYSTEM DRAWINGS

FIU PEDESTRIAN BRIDGE
MIAMI, FL
MUNILLA CONSTRUCTION MANAGEMENT, LLC (MCM)

SCALE:	NTS
JOB NO:	420582
SHEET:	PT01.7

MCM

Review is for general conformance with the Contract Documents. Comments shall not be construed as relieving the supplier/subcontractor from strict compliance with such documents. The supplier/subcontractor remain responsible for details and accuracy, for complying with standards of the industry regarding fabrication, assembly, erection and installation procedures.

- [x] REVIEWED
- [ ] REVISE & RESUBMIT
- [ ] REVIEWED AS NOTED
- [ ] REJECTED

By: AR

Date: 05/22/17

RELEASED FOR CONSTRUCTION AS NOTED

Structures Design Office – District 6
Department of Transportation
STATE OF FLORIDA

Date: 6/27/17

Reviewed By: CEG

Review is for general conformance with Contract Documents. Sole responsibility for correctness of dimensions, details, quantities and safety during fabrication and erection shall remain with the Contractor.

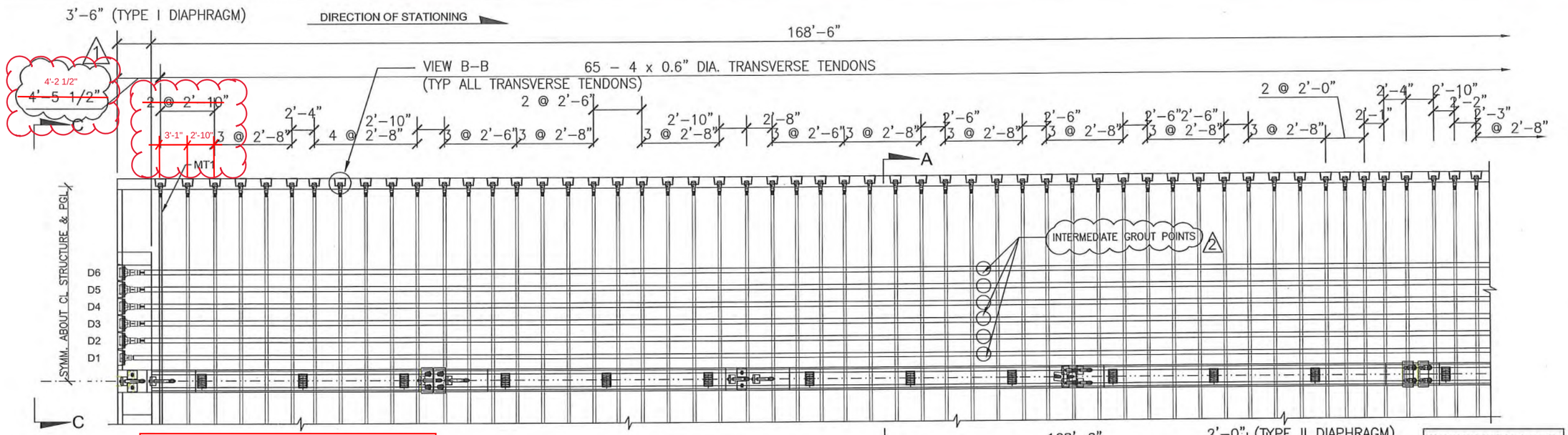

ELONGATION VALUES SHOWN ARE CALCULATED BY VSL AND DIFFER FROM PLAN SHEET B-69

SEE PT2.2 FOR DETAILS AND SECTIONS

PARTIAL PLAN
3/32" = 1'-0"

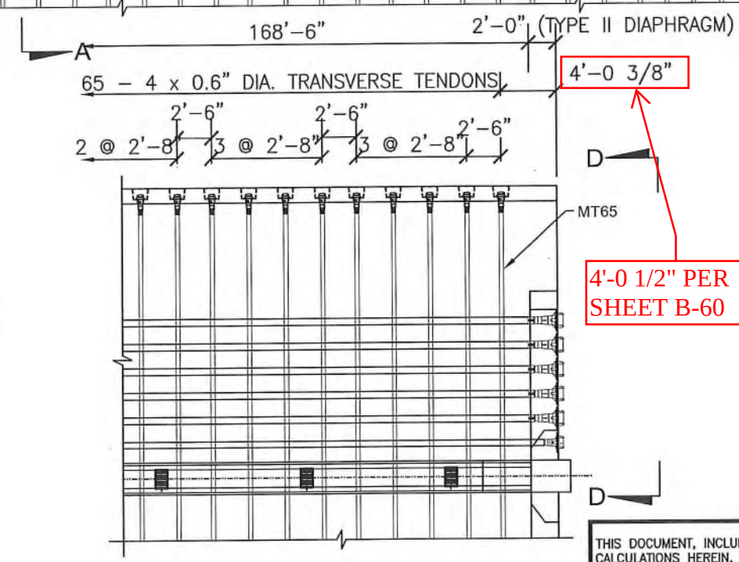

4'-0 1/2" PER SHEET B-60

PARTIAL PLAN (CONT.)
3/32" = 1'-0"

LONGITUDINAL TENDON DATA TABLE [SYMM. ABOUT CL OF BRIDGE]

LOCATION	TENDON DESIG.	NO. REQ.	TENDON SIZE	TENDON LENGTH (ft-in)	THEORETICAL ELONGATION (in) (BEFORE ANCHOR SET) 100%	80%	STRESS END	STRESSING FORCE / TENDON (kips)	STRESSING SEQUENCE
MAIN SPAN DECK	D1	2	12 X 0.6"	173'-4 ¼"	14.39	11.51	DOWNSTATION	527	1
	D2	2	19 X 0.6"	173'-4 ¼"	14.39	11.51	DOWNSTATION	835	2
	D3	2	19 X 0.6"	173'-4 ¼"	14.39	11.51	DOWNSTATION	835	3
	D4	2	19 X 0.6"	173'-4 ¼"	14.39	11.51	DOWNSTATION	835	4
	D5	2	19 X 0.6"	173'-4 ¼"	14.39	11.51	DOWNSTATION	835	5
	D6	2	19 X 0.6"	173'-4 ¼"	14.39	11.51	DOWNSTATION	835	6
BACK SPAN DECK	D7	2	19 X 0.6"	98'-10 3/4"	8.33	6.66	UPSTATION	828	8
	D8	2	19 X 0.6"	98'-10 3/4"	8.33	6.66	UPSTATION	828	9
	D9	2	19 X 0.6"	98'-10 3/4"	8.33	6.66	UPSTATION	828	10

TRANSVERSE TENDON DATA TABLE

LOCATION	TENDON DESIG.	NO. REQ.	TENDON SIZE	TENDON LENGTH (ft-in)	THEO.ELONGATION (AFTER ANCHOR SET) (in) 100%	80%	STRESS END	STRESSING FORCE / TENDON (kips)	STRESSING SEQUENCE
MAIN SPAN	MT1-MT65	65	4 X 0.6"	30' - 8"	2.38	1.90	ALTERNATE	46.75 X 4 = 187	7
CLOSURE	CT1	1	4 X 0.6"	30' - 8"	2.38	1.90	ALTERNATE	46.75 X 4 = 187	12
BACK SPAN	BT1-BT40 & BT38-BT40	~~40~~ 38	4 X 0.6"	30' - 8"	2.38	1.90	ALTERNATE	46.75 X 4 = 187	11
NORTH LANDING	NT1-NT5	~~5~~ 4	4 X 0.6"	30' - 2"	2.33	1.86	ALTERNATE	46.75 X 4 = 187	13
BACK SPAN	BT36 & BT37	2	4 X 0.6"	30' - 2"	2.33	1.86	ALTERNATE	46.75 X 4 = 187	11
N. LANDING	NT1	1	4 X 0.6"	30' - 8"	2.38	1.90	ALTERNATE	46.75 X 4 = 187	13

Add note referencing Sheets B-109 & B-110 for overall stressing sequence.

NOT FOR CONSTRUCTION

SHARATH MURTHY
LICENSE
No. 79039
STATE OF FLORIDA
PROFESSIONAL ENGINEER

SHOP DRAWING REVIEW

- ____ FOR INFORMATION ONLY
- ____ ACCEPTED
- X ACCEPTED AS NOTED
- ____ ACCEPTED AS NOTED & RESUBMIT
- ____ NOT ACCEPTED

This review is only for general conformance with design intent of the project and general compliance with the information given in the contract documents. Review, corrections or comments made concerning the shop drawings during this review do not relieve the contractor from compliance with requirements of the drawings and specifications, nor relieve the contractor of contractual responsibility for any error or deviation from contract requirements. The contractor is responsible for confirming and correlating all quantities, dimensions and structural capabilities - Selecting fabrication processes and techniques of construction - Coordinating his work with that of all other trades - and performing his work in a safe and satisfactory manner.

FIGG Subconsultant:
Firm:
By: ____ Date: ____

FIGG BRIDGE ENGINEERS, Inc.
By: KLB Date: 5/25/2017

THIS DOCUMENT, INCLUDING ANY DRAWINGS, SPECIFICATIONS, AND CALCULATIONS HEREIN, CONTAINS INFORMATION THAT IS PROPRIETARY TO STRUCTURAL TECHNOLOGIES LLC ("VSL"). THIS DOCUMENT AND THE INFORMATION CONTAINED HEREIN IS CONFIDENTIAL AND MAY NOT BE REPRODUCED OR DISCLOSED WITHOUT THE PRIOR WRITTEN CONSENT OF STRUCTURAL TECHNOLOGIES LLC ("VSL"). FURTHER, THE USE OF THIS DOCUMENT OR ANY INFORMATION PRESENTED HEREIN IS RESTRICTED TO THE SPECIFIC PROJECT AND PURPOSE FOR WHICH IT WAS PREPARED. ANY OTHER USE IS STRICTLY PROHIBITED. STRUCTURAL TECHNOLOGIES ("VSL") DISCLAIMS ANY LIABILITY FOR ANY UNAUTHORIZED, UNINTENDED, OR OTHER IMPERMISSIBLE USE OF THIS DOCUMENT OR ANY INFORMATION IT CONTAINS

Structural Technologies LLC (VSL) SHOP DRAWING

These shop drawings illustrate the details of the VSL Post-Tensioning System. They were prepared in conformance with the structural design provided to VSL by project owner or it's representative. VSL took no part in the preparation or review of said structural design and VSL DISCLAIMS ANY LIABILITY for it. The stamp or seal of a VSL employees on these shop drawings pertains only to the transfer of the forces required by the engineer of record on the structural drawings, and not to the adequacy of the structural design. NO WARRANTY, EXPRESSED OR IMPLIED, as to the adequacy of the structural design is made by virtue of any such stamp or seal.

NO.	DATE	DESCRIPTION	ISSUED FOR	BY	CHK
2	05/26/17	PER MCM-VSL MEETING 05/25/17	APPROVAL	GP	SM
1	05/10/17	PER EOR COMMENT DATED 05/01/17	APPROVAL	GP	SM
0	04/26/17	PER FINAL SUBMITTAL DESIGN DWG DATED 02/2017	APPROVAL	GP	SM

structural TECHNOLOGIES
A Structural Group Company
STRUCTURAL TECHNOLOGIES, LLC 2001 Blount Road Phone: 954/489-3991
Pompano Beach, FL office: Pompano Beach, FL 33069 Fax: 954/489-3992
Dallas, TX / Washington, DC / Denver, CO / Pompano Beach, FL / Atlanta, GA

DECK PT PLAN – MAIN SPAN

FIU PEDESTRIAN BRIDGE
MIAMI, FL
MUNILLA CONSTRUCTION MANAGEMENT, LLC (MCM)

SCALE: VARIES
JOB NO: 420582
SHEET: PT02

MCM

Review is for general conformance with the Contract Documents. Comments shall not be construed as relieving the supplier/subcontractor from strict compliance with such documents. The supplier/subcontractor remain responsible for details and accuracy, for complying with standards of the industry regarding fabrication, assembly, erection and installation procedures.

- [x] REVIEWED
- [ ] REVISE & RESUBMIT
- [ ] REVIEWED AS NOTED
- [ ] REJECTED

By: AR

Date: 05/22/17

RELEASED FOR CONSTRUCTION AS NOTED

Structures Design Office – District 6
Department of Transportation
STATE OF FLORIDA

Date: 6/27/17

Reviewed By: CEG

Review is for general conformance with Contract Documents. Sole responsibility for correctness of dimensions, details, quantities and safety during fabrication and erection shall remain with the Contractor.

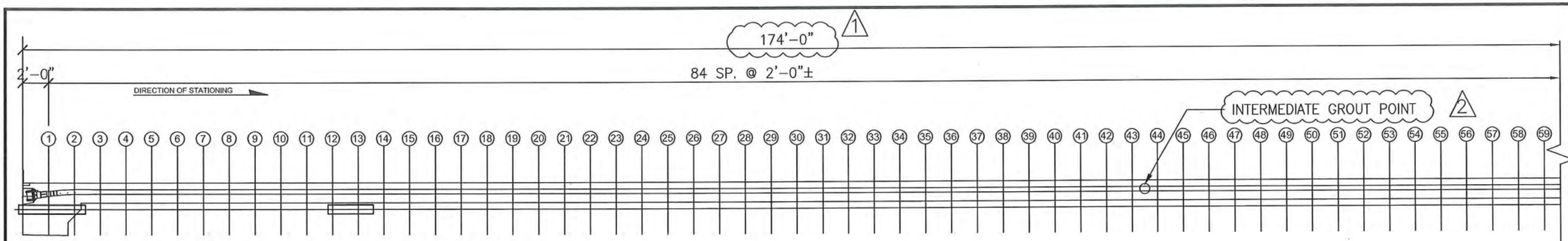

PARTIAL PROFILE VIEW
1/8" = 1'-0"

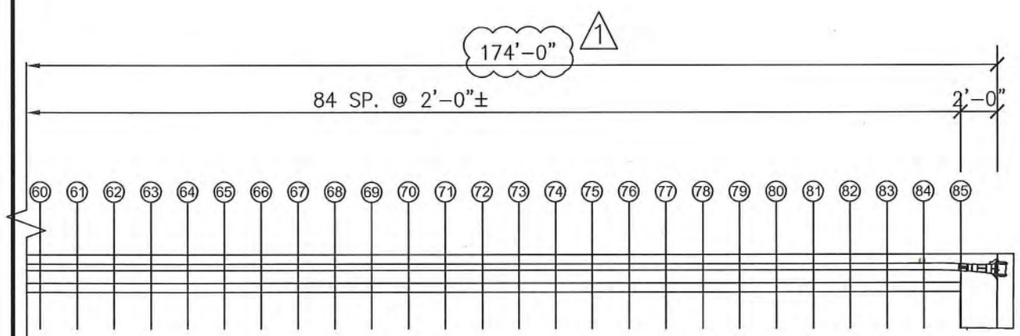

PARTIAL PROFILE VIEW
1/8" = 1'-0"

TENDON SUPPORT HEIGHT SCHEDULE (TRANSVERSE)

A	*
B	0'-6 3/4"
C	0'-9 1/8"
D	0'-11 1/8"
E	1'-1"
F	1'-3"
G	1'-5"
H	1'-6 7/8"

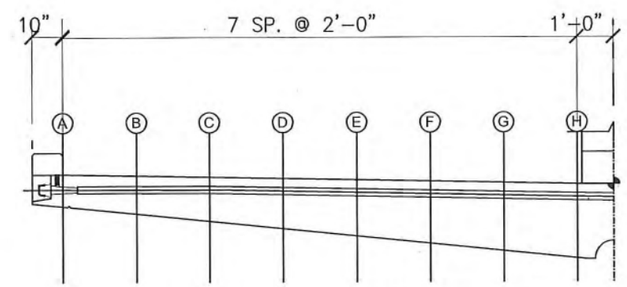

NOTE: SYMMETRICAL ACROSS CL
TYPICAL TRANSVERSE TENDON PROFILE
1/4" = 1'-0"

TENDON SUPPORT HEIGHT SCHEDULE (MAIN SPAN)

TENDON DESIGNATION	1	2	3 THRU 83	84	85
D1	**	1'-1 1/4"	1'-1 1/4"	1'-1 1/4"	**
D2	**	11 1/4"	11 1/4"	11 1/4"	**
D3	**	9 3/8"	9 3/8"	9 3/8"	**
D4	**	7 1/2"	7 1/2"	7 1/2"	**
D5	**	5 3/4"	5 3/4"	5 3/4"	**
D6	**	3 7/8"	3 7/8"	3 7/8"	**

NOTE: SUPPORT HEIGHT IS FROM BOTTOM OF SOFFIT TO BOTTOM OF DUCT

SHOP DRAWING REVIEW

____ FOR INFORMATION ONLY
X ACCEPTED
____ ACCEPTED AS NOTED
____ ACCEPTED AS NOTED & RESUBMIT
____ NOT ACCEPTED

This review is only for general conformance with design intent of the project and general compliance with the information given in the contract documents. Review, corrections or comments made concerning the shop drawings during this review do not relieve the contractor from compliance with requirements of the drawings and specifications, nor relieve the contractor of contractual responsibility for any error or deviation from contract requirements. The contractor is responsible for confirming and correlating all quantities, dimensions and structural capabilities - Selecting fabrication processes and techniques of construction - Coordinating his work with that of all other trades - and performing his work in a safe and satisfactory manner.

FIGG Subconsultant:
Firm:
By: ____ Date: ____

FIGG BRIDGE ENGINEERS, Inc.
By: KLB Date: 5/25/2017

NOT FOR CONSTRUCTION

SHARATH MURTHY
LICENSE
No. 79039
STATE OF FLORIDA
PROFESSIONAL ENGINEER
5/26/17

THIS DOCUMENT, INCLUDING ANY DRAWINGS, SPECIFICATIONS, AND CALCULATIONS HEREIN, CONTAINS INFORMATION THAT IS PROPRIETARY TO STRUCTURAL TECHNOLOGIES LLC ("VSL"). THIS DOCUMENT AND THE INFORMATION CONTAINED HEREIN IS CONFIDENTIAL AND MAY NOT BE REPRODUCED OR DISCLOSED WITHOUT THE PRIOR WRITTEN CONSENT OF STRUCTURAL TECHNOLOGIES LLC ("VSL"). FURTHER, THE USE OF THIS DOCUMENT OR ANY INFORMATION PRESENTED HEREIN IS RESTRICTED TO THE SPECIFIC PROJECT AND PURPOSE FOR WHICH IT WAS PREPARED. ANY OTHER USE IS STRICTLY PROHIBITED. STRUCTURAL TECHNOLOGIES ("VSL") DISCLAIMS ANY LIABILITY FOR ANY UNAUTHORIZED, UNINTENDED, OR OTHER IMPERMISSIBLE USE OF THIS DOCUMENT OR ANY INFORMATION IT CONTAINS

Structural Technologies LLC (VSL) SHOP DRAWING

These shop drawings illustrate the details of the VSL Post-Tensioning System. They were prepared in conformance with the structural design provided to VSL by project owner or it's representative. VSL took no part in the preparation or review of said structural design and VSL DISCLAIMS ANY LIABILITY for it. The stamp or seal of a VSL employees on these shop drawings pertains only to the transfer of the forces required by the engineer of record on the structural drawings, and not to the adequacy of the structural design. NO WARRANTY, EXPRESSED OR IMPLIED, as to the adequacy of the structural design is made by virtue of any such stamp or seal.

NO.	DATE	DESCRIPTION	ISSUED FOR	BY	CHK
2	05/26/17	PER MCM-VSL MEETING 05/25/17	APPROVAL	GP	SM
1	05/19/17	PER EOR COMMENT DATED 05/01/17	APPROVAL	GP	SM
0	04/26/17	PER 90% DRAWINGS DATED FEB.2017	APPROVAL	GP	SM

structural TECHNOLOGIES
A Structural Group Company
STRUCTURAL TECHNOLOGIES/VSL LLC
Pompano Beach, FL office: 2001 Blount Road Pompano Beach, FL 33069
Phone: 954/489-3991
Fax: 954/489-3992
Dallas, TX / Washington, DC / Denver, CO / Pompano Beach, FL / Atlanta, GA

DECK PT PLAN - MAIN SPAN PT PROFILES

FIU PEDESTRIAN BRIDGE
MIAMI, FL
MUNILLA CONSTRUCTION MANAGEMENT, LLC (MCM)

SCALE: VARIES
JOB NO: 420582
SHEET: PT02.1

MCM

Review is for general conformance with the Contract Documents. Comments shall not be construed as relieving the supplier/subcontractor from strict compliance with such documents. The supplier/subcontractor remain responsible for details and accuracy, for complying with standards of the industry regarding fabrication, assembly, erection and installation procedures.

- [x] REVIEWED
- [ ] REVISE & RESUBMIT
- [ ] REVIEWED AS NOTED
- [ ] REJECTED

By: AR

Date: 05/22/17

RELEASED FOR CONSTRUCTION

Structures Design Office – District 6
Department of Transportation
STATE OF FLORIDA

Date: 06/26/17

Reviewed By: CEG

Review is for general conformance with Contract Documents. Sole responsibility for correctness of dimensions, details, quantities and safety during fabrication and erection shall remain with the Contractor.

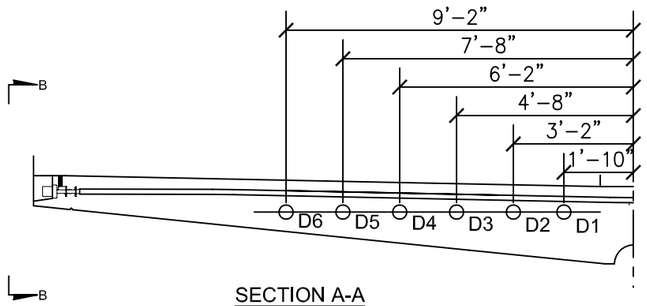

SECTION A-A
SCALE: 1/4" = 1'-0"
NOTE: SYMMETRICAL ACROSS CL

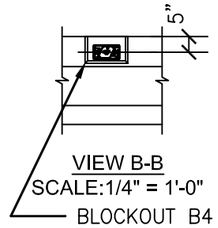

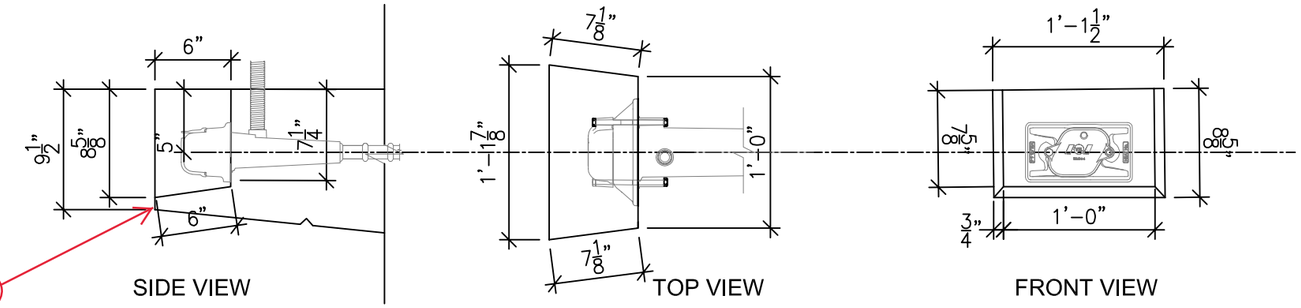

Modify blockout shape to prevent spalling at this corner during stressing of the tendon.

BLOCKOUT DETAIL B4 [132 TOTAL]
(BY OTHERS) SCALE: 1" = 1'-0"

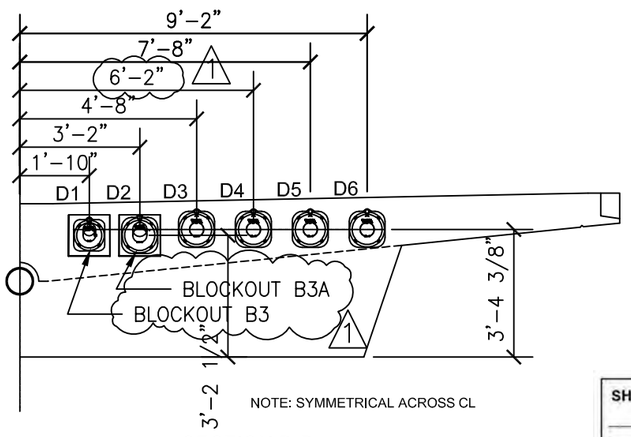

SECTION D-D
SCALE: 1/4" = 1'-0"

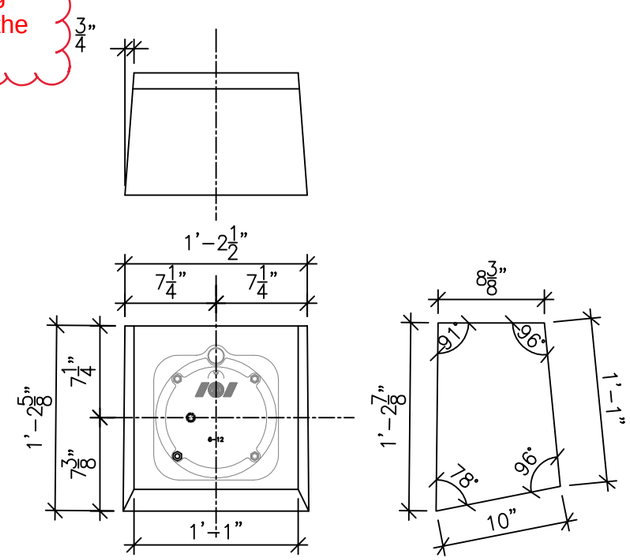

BLOCKOUT DETAIL,B1 [1 TOTAL]
(BY OTHERS)
SCALE: 1" = 1'-0"

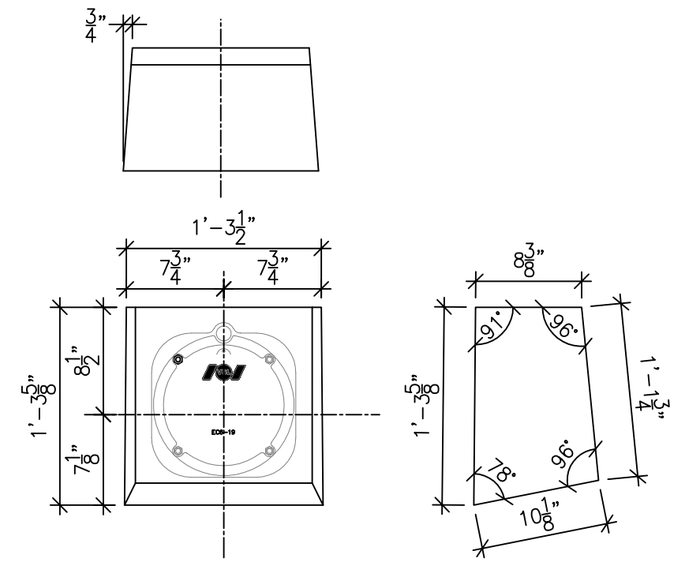

BLOCKOUT DETAIL B2 [5 TOTAL]
(BY OTHERS)
SCALE: 1" = 1'-0"

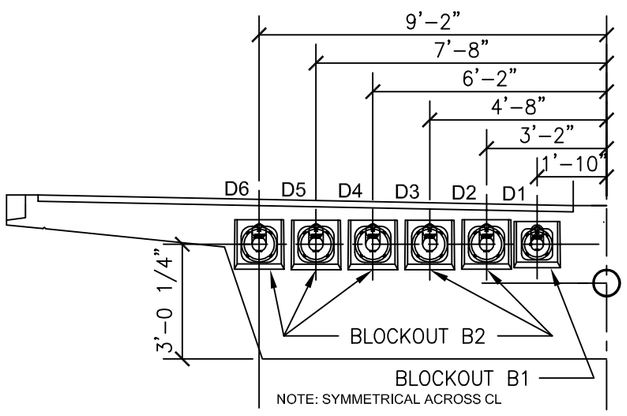

SECTION C-C
SCALE: 1/4" = 1'-0"

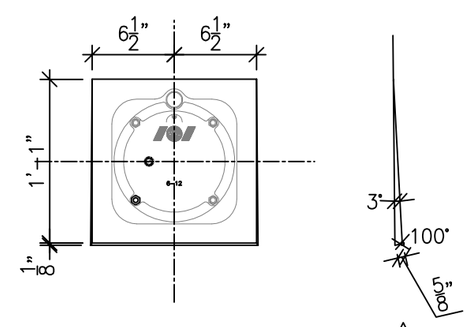

1

BLOCKOUT DETAIL B3/B3A [2 TOTAL]
(BY OTHERS)
SCALE: 1" = 1'-0"

SHOP DRAWING REVIEW

_____ FOR INFORMATION ONLY
_____ ACCEPTED
__X__ ACCEPTED AS NOTED
_____ ACCEPTED AS NOTED & RESUBMIT
_____ NOT ACCEPTED

This review is only for general conformance with design intent of the project and general compliance with the information given in the contract documents. Review, corrections or comments made concerning the shop drawings during this review do not relieve the contractor from compliance with requirements of the drawings and specifications, nor relieve the contractor of contractual responsibility for any error or deviation from contract requirements.
The contractor is responsible for confirming and correlating all quantities, dimensions and structural capabilities - Selecting fabrication processes and techniques of construction - Coordinating his work with that of all other trades - and performing his work in a safe and satisfactory manner.

FIGG Subconsultant:
Firm: _____
By: _____ Date: _____

FIGG BRIDGE ENGINEERS, Inc.
By: KLB Date: 5/25/2017

NOT FOR CONSTRUCTION

SHARATH MURTHY
LICENSE
No. 79039
STATE OF FLORIDA
PROFESSIONAL ENGINEER

THIS DOCUMENT, INCLUDING ANY DRAWINGS, SPECIFICATIONS, AND CALCULATIONS HEREIN, CONTAINS INFORMATION THAT IS PROPRIETARY TO STRUCTURAL TECHNOLOGIES LLC ("VSL"). THIS DOCUMENT AND THE INFORMATION CONTAINED HEREIN IS CONFIDENTIAL AND MAY NOT BE REPRODUCED OR DISCLOSED WITHOUT THE PRIOR WRITTEN CONSENT OF STRUCTURAL TECHNOLOGIES LLC ("VSL"). FURTHER, THE USE OF THIS DOCUMENT OR ANY INFORMATION PRESENTED HEREIN IS RESTRICTED TO THE SPECIFIC PROJECT AND PURPOSE FOR WHICH IT WAS PREPARED. ANY OTHER USE IS STRICTLY PROHIBITED. STRUCTURAL TECHNOLOGIES ("VSL") DISCLAIMS ANY LIABILITY FOR ANY UNAUTHORIZED, UNINTENDED, OR OTHER IMPERMISSIBLE USE OF THIS DOCUMENT OR ANY INFORMATION IT CONTAINS

Structural Technologies LLC (VSL) SHOP DRAWING

These shop drawings illustrate the details of the VSL Post-Tensioning System. They were prepared in conformance with the structural design provided to VSL by project owner or it's representative. VSL took no part in the preparation or review of said structural design and VSL DISCLAIMS ANY LIABILITY for it. The stamp or seal of a VSL employees on these shop drawings pertains only to the transfer of the forces required by the engineer of record on the structural drawings, and not to the adequacy of the structural design. NO WARRANTY, EXPRESSED OR IMPLIED, as to the adequacy of the structural design is made by virtue of any such stamp or seal.

NO.	DATE	DESCRIPTION	BY	CHK
1	05/19/17	PER EOR COMMENT DATED 05/01/17	GP	SM
0	04/26/17	PER 90% DRAWINGS DATED FEB.2017	GP	SM
		ISSUED FOR APPROVAL		

structural TECHNOLOGIES
A Structural Group Company
STRUCTURAL TECHNOLOGIES/FSL, LLC
Pompano Beach, FL office: 2001 Blount Road, Pompano Beach, FL 33069
Phone: 954/489-3991
Fax: 954/489-3992
Dallas, TX / Washington, DC / Denver, CO / Pompano Beach, FL / Atlanta, GA

DECK PT PLAN – MAIN SPAN DETAILS

FIU PEDESTRIAN BRIDGE
MIAMI, FL
MUNILLA CONSTRUCTION MANAGEMENT, LLC (MCM)

SCALE: VARIES
JOB NO: 420582
SHEET: PT02.2

MCM

Review is for general conformance with the Contract Documents. Comments shall not be construed as relieving the supplier/subcontractor from strict compliance with such documents. The supplier/subcontractor remain responsible for details and accuracy, for complying with standards of the industry regarding fabrication, assembly, erection and installation procedures.

- [x] REVIEWED
- [ ] REVISE & RESUBMIT
- [ ] REVIEWED AS NOTED
- [ ] REJECTED

By: AR

Date: 05/22/17

RELEASED FOR CONSTRUCTION

Structures Design Office – District 6
Department of Transportation
STATE OF FLORIDA

Date: 06/26/17

Reviewed By: CEG

Review is for general conformance with Contract Documents. Sole responsibility for correctness of dimensions, details, quantities and safety during fabrication and erection shall remain with the Contractor.

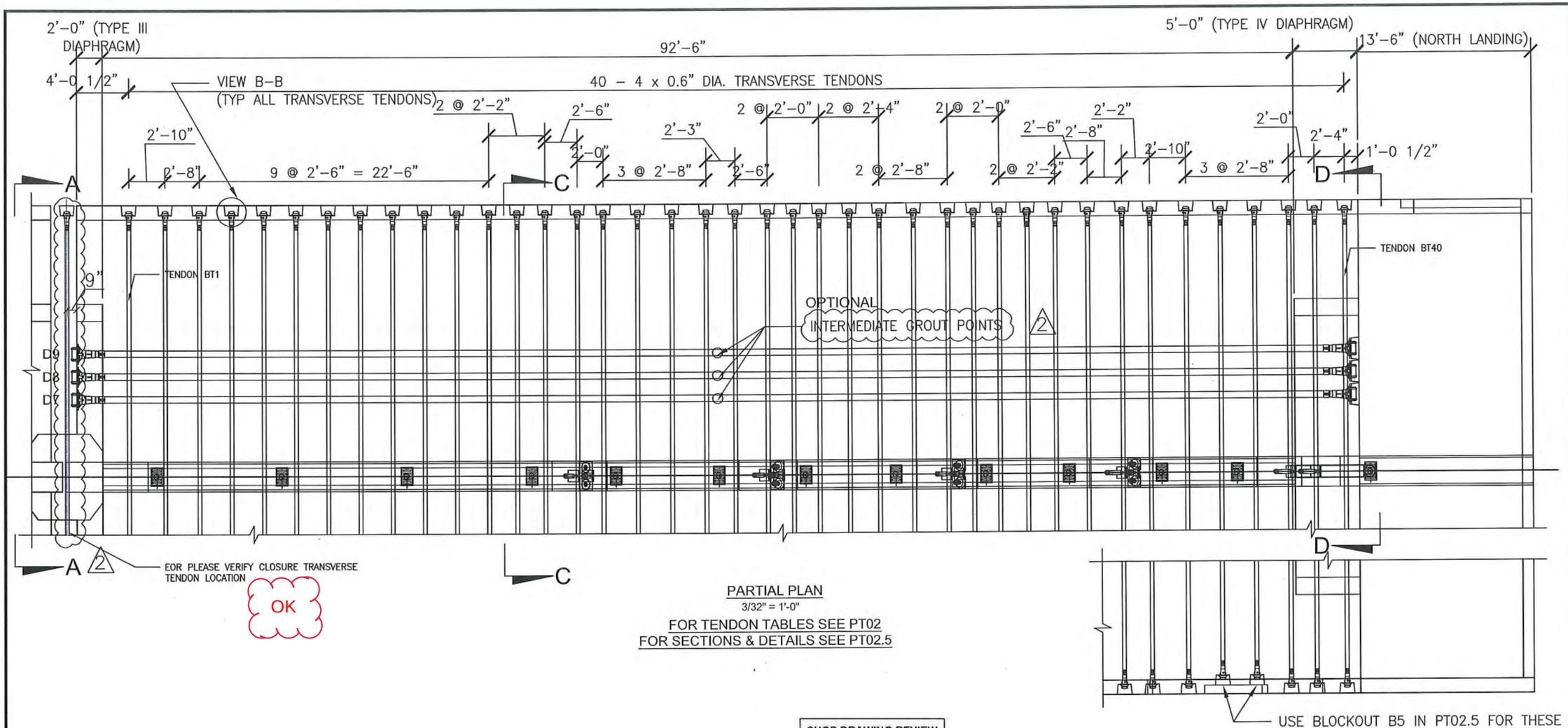

PARTIAL PLAN
3/32" = 1'-0"

FOR TENDON TABLES SEE PT02
FOR SECTIONS & DETAILS SEE PT02.5

PARTIAL PLAN

SHOP DRAWING REVIEW

_____ FOR INFORMATION ONLY
_X_ ACCEPTED
_____ ACCEPTED AS NOTED
_____ ACCEPTED AS NOTED & RESUBMIT
_____ NOT ACCEPTED

This review is only for general conformance with design intent of the project and general compliance with the information given in the contract documents. Review, corrections or comments made concerning the shop drawings during this review do not relieve the contractor from compliance with requirements of the drawings and specifications, nor relieve the contractor of contractual responsibility for any error or deviation from contract requirements.
The contractor is responsible for confirming and correlating all quantities, dimensions and structural capabilities - Selecting fabrication processes and techniques of construction - Coordinating his work with that of all other trades - and performing his work in a safe and satisfactory manner.

FIGG Subconsultant:
Firm:
By:_____ Date:_____

FIGG BRIDGE ENGINEERS, Inc.
By: KLB Date: 5/25/2017

NOT FOR CONSTRUCTION

SHARATH MURTHY
LICENSE
No. 79039
STATE OF FLORIDA
PROFESSIONAL ENGINEER
5/26/17

THIS DOCUMENT, INCLUDING ANY DRAWINGS, SPECIFICATIONS, AND CALCULATIONS HEREIN, CONTAINS INFORMATION THAT IS PROPRIETARY TO STRUCTURAL TECHNOLOGIES LLC ("VSL"). THIS DOCUMENT AND THE INFORMATION CONTAINED HEREIN IS CONFIDENTIAL AND MAY NOT BE REPRODUCED OR DISCLOSED WITHOUT THE PRIOR WRITTEN CONSENT OF STRUCTURAL TECHNOLOGIES LLC ("VSL"). FURTHER, THE USE OF THIS DOCUMENT OR ANY INFORMATION PRESENTED HEREIN IS RESTRICTED TO THE SPECIFIC PROJECT AND PURPOSE FOR WHICH IT WAS PREPARED. ANY OTHER USE IS STRICTLY PROHIBITED. STRUCTURAL TECHNOLOGIES ("VSL") DISCLAIMS ANY LIABILITY FOR ANY UNAUTHORIZED, UNINTENDED, OR OTHER IMPERMISSIBLE USE OF THIS DOCUMENT OR ANY INFORMATION IT CONTAINS

Structural Technologies LLC (VSL) SHOP DRAWING

These shop drawings illustrate the details of the VSL Post-Tensioning System. They were prepared in conformance with the structural design provided to VSL by project owner or it's representative. VSL took no part in the preparation or review of said structural design and VSL DISCLAIMS ANY LIABILITY for it. The stamp or seal of a VSL employees on these shop drawings pertains only to the transfer of the forces required by the engineer of record on the structural drawings, and not to the adequacy of the structural design. NO WARRANTY, EXPRESSED OR IMPLIED, as to the adequacy of the structural design is made by virtue of any such stamp or seal.

NO.	DATE	DESCRIPTION	ISSUED FOR	BY	CHK
2	05/26/17	PER MCM-VSL MEETING 05/25/17	APPROVAL	GP	SM
1	05/19/17	PER EOR COMMENT DATED 05/01/17	APPROVAL	GP	SM
0	04/26/17	PER 90% DRAWINGS DATED FEB.2017	APPROVAL	GP	SM

structural TECHNOLOGIES
A Structural Group Company
STRUCTURAL TECHNOLOGIES, VSL, LLC 2001 Blount Road, Pompano Beach, FL 33069 Phone: 954/489-3991 Fax: 954/489-3992
Dallas, TX / Washington, DC / Denver, CO / Pompano Beach, FL / Atlanta, GA

DECK PT PLAN - BACK SPAN

FIU PEDESTRIAN BRIDGE
MIAMI, FL
MUNILLA CONSTRUCTION MANAGEMENT, LLC (MCM)

SCALE: VARIES
JOB NO: 420582
SHEET: PT02.3

MCM

Review is for general conformance with the Contract Documents. Comments shall not be construed as relieving the supplier/subcontractor from strict compliance with such documents. The supplier/subcontractor remain responsible for details and accuracy, for complying with standards of the industry regarding fabrication, assembly, erection and installation procedures.

- [x] REVIEWED
- [ ] REVISE & RESUBMIT
- [ ] REVIEWED AS NOTED
- [ ] REJECTED

By: AR

Date: 05/22/17

RELEASED FOR CONSTRUCTION

Structures Design Office – District 6
Department of Transportation
STATE OF FLORIDA

Date: 06/26/17

Reviewed By: CEG

Review is for general conformance with Contract Documents. Sole responsibility for correctness of dimensions, details, quantities and safety during fabrication and erection shall remain with the Contractor.

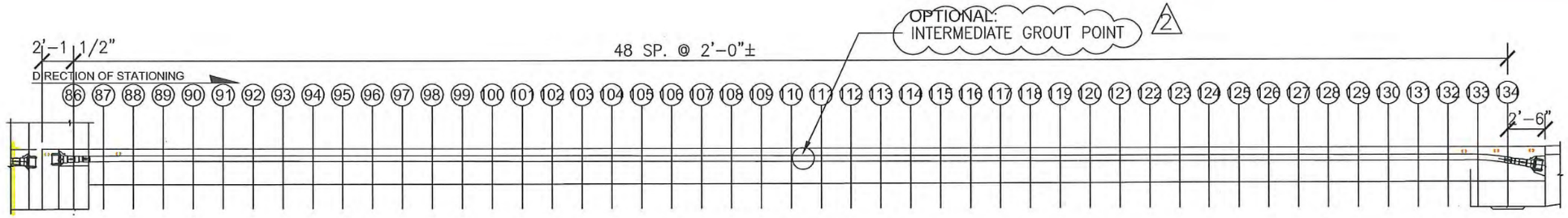

TENDON SUPPORT HEIGHT SCHEDULE (BACK SPAN)

TENDON DESINATION	86	87	88 THRU 132	133	134
D7	9 1/4"	9 3/8"	9 3/8"	9 3/8"	6 3/8"
D8	7 3/8"	7 1/2"	7 1/2"	7 1/2"	4 1/2"
D9	5 5/8"	5 3/4"	5 3/4"	5 3/4"	2 3/4"

1

TENDON SUPPORT HEIGHT SCHEDULE (TRANSVERSE)

A	*
B	0'-6 3/4"
C	0'-9 1/8"
D	0'-11 1/8"
E	1'-1"
F	1'-3"
G	1'-5"
H	1'-6 7/8"

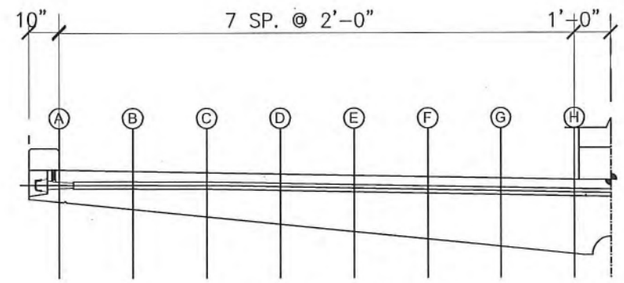

NOTE: SYMMETRICAL ACROSS CL

TYPICAL TRANSVERSE TENDON PROFILE

1/4" = 1'-0"

TENDON SUPPORT HEIGHT SCHEDULE (NORTH LANDING)

A	*
B	0'-6 1/4"
C	0'-8 1/8"
D	0'-10 1/8"
E	1'-0 1/8"
F	1'-2"
G	1'-4"
H	1'-6"

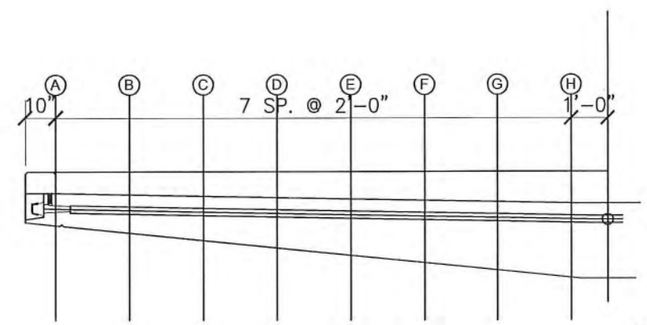

NOTE: SYMMETRICAL ACROSS CL

NORTH LANDING TENDON PROFILE

1/4" = 1'-0"

NOTE: SUPPORT HEIGHT IS FROM BOTTOM OF SOFFIT TO BOTTOM OF DUCT

SHOP DRAWING REVIEW

_____ FOR INFORMATION ONLY
__X__ ACCEPTED
_____ ACCEPTED AS NOTED
_____ ACCEPTED AS NOTED & RESUBMIT
_____ NOT ACCEPTED

This review is only for general conformance with design intent of the project and general compliance with the information given in the contract documents. Review, corrections or comments made concerning the shop drawings during this review do not relieve the contractor from compliance with requirements of the drawings and specifications, nor relieve the contractor of contractual responsibility for any error or deviation from contract requirements. The contractor is responsible for confirming and correlating all quantities, dimensions and structural capabilities - Selecting fabrication processes and techniques of construction - Coordinating his work with that of all other trades - and performing his work in a safe and satisfactory manner.

FIGG Subconsultant:

Firm:

By:_____ Date:_____

FIGG BRIDGE ENGINEERS, Inc.

By: KLB Date: 5/25/2017

NOT FOR CONSTRUCTION

SHARATH MURTHY
LICENSE
No. 79039
STATE OF FLORIDA
PROFESSIONAL ENGINEER
5/26/17

THIS DOCUMENT, INCLUDING ANY DRAWINGS, SPECIFICATIONS, AND CALCULATIONS HEREIN, CONTAINS INFORMATION THAT IS PROPRIETARY TO STRUCTURAL TECHNOLOGIES LLC ("VSL"). THIS DOCUMENT AND THE INFORMATION CONTAINED HEREIN IS CONFIDENTIAL AND MAY NOT BE REPRODUCED OR DISCLOSED WITHOUT THE PRIOR WRITTEN CONSENT OF STRUCTURAL TECHNOLOGIES LLC ("VSL"). FURTHER, THE USE OF THIS DOCUMENT OR ANY INFORMATION PRESENTED HEREIN IS RESTRICTED TO THE SPECIFIC PROJECT AND PURPOSE FOR WHICH IT WAS PREPARED. ANY OTHER USE IS STRICTLY PROHIBITED. STRUCTURAL TECHNOLOGIES ("VSL") DISCLAIMS ANY LIABILITY FOR ANY UNAUTHORIZED, UNINTENDED, OR OTHER IMPERMISSIBLE USE OF THIS DOCUMENT OR ANY INFORMATION IT CONTAINS

Structural Technologies LLC (VSL) SHOP DRAWING

These shop drawings illustrate the details of the VSL Post-Tensioning System. They were prepared in conformance with the structural design provided to VSL by project owner or it's representative. VSL took no part in the preparation or review of said structural design and VSL DISCLAIMS ANY LIABILITY for it. The stamp or seal of a VSL employees on these shop drawings pertains only to the transfer of the forces required by the engineer of record on the structural drawings, and not to the adequacy of the structural design. NO WARRANTY, EXPRESSED OR IMPLIED, as to the adequacy of the structural design is made by virtue of any such stamp or seal.

NO.	DATE	DESCRIPTION	ISSUED FOR	BY	CHK
2	05/26/17	PER MCM-VSL MEETING 05/25/17	APPROVAL	GP	SM
1	05/10/17	PER EOR COMMENT DATED 05/01/17	APPROVAL	GP	SM
0	04/26/17	PER 90% DRAWINGS DATED FEB.2017	APPROVAL	GP	SM

structural TECHNOLOGIES
A Structural Group Company
STRUCTURAL TECHNOLOGIES/VSL, LLC 2001 Blount Road Phone: 954/489-3991
Pompano Beach, FL office: Pompano Beach, FL 33069 Fax: 954/489-3992
Dallas, TX / Washington, DC / Denver, CO / Pompano Beach, FL / Atlanta, GA

DECK PT PLAN - BACK SPAN PROFILES

FIU PEDESTRIAN BRIDGE
MIAMI, FL
MUNILLA CONSTRUCTION MANAGEMENT, LLC (MCM)

SCALE: VARIES
JOB NO: 420582
SHEET: PT02.4

MCM

Review is for general conformance with the Contract Documents. Comments shall not be construed as relieving the supplier/subcontractor from strict compliance with such documents. The supplier/subcontractor remain responsible for details and accuracy, for complying with standards of the industry regarding fabrication, assembly, erection and installation procedures.

- [x] REVIEWED
- [ ] REVISE & RESUBMIT
- [ ] REVIEWED AS NOTED
- [ ] REJECTED

By: AR

Date: 05/22/17

RELEASED FOR CONSTRUCTION

Structures Design Office – District 6
Department of Transportation
STATE OF FLORIDA

Date: 06/26/17

Reviewed By: CEG

Review is for general conformance with Contract Documents. Sole responsibility for correctness of dimensions, details, quantities and safety during fabrication and erection shall remain with the Contractor.

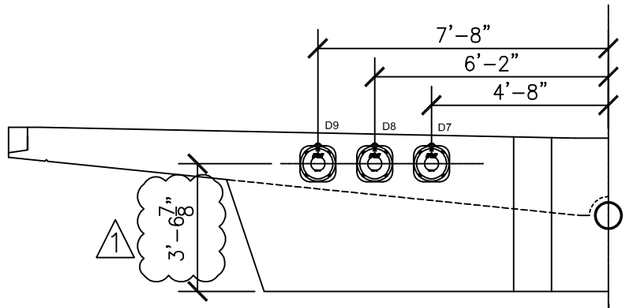

NOTE: SYMMETRICAL ACROSS CL

SECTION A-A
1/4" = 1'-0"

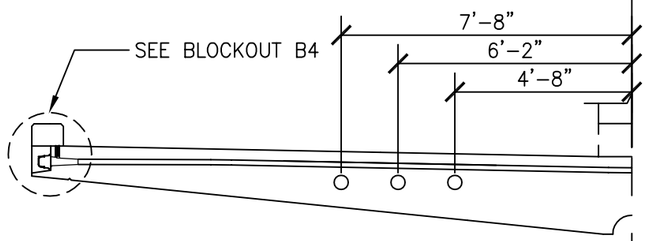

NOTE: SYMMETRICAL ACROSS CL

SECTION C-C
1/4" = 1'-0"

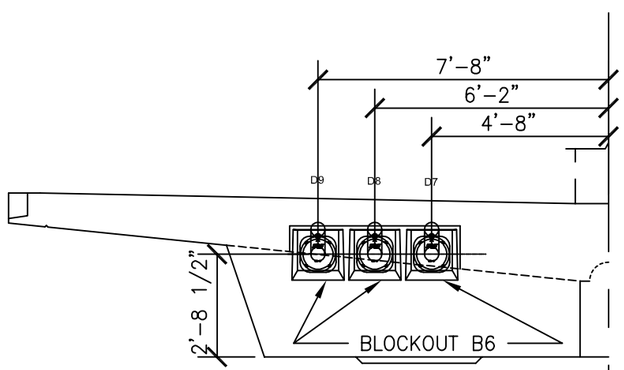

NOTE: SYMMETRICAL ACROSS CL

SECTION D-D
1/4" = 1'-0"

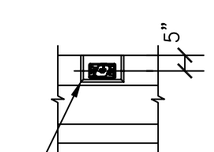

VIEW B-B
SCALE:1/4" = 1'-0"
BLOCKOUT B4

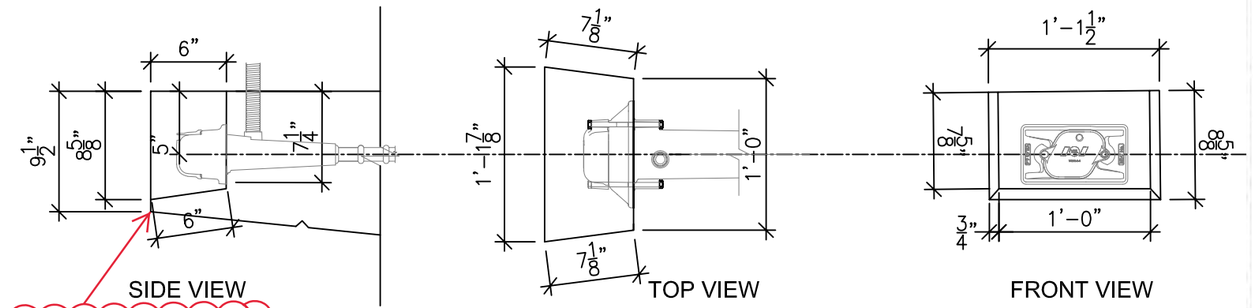

Modify blockout shape to prevent spalling at this corner during stressing of the tendon.

BLOCKOUT DETAIL B4 [78 TOTAL]
(BY OTHERS) SCALE: 1" = 1'-0"

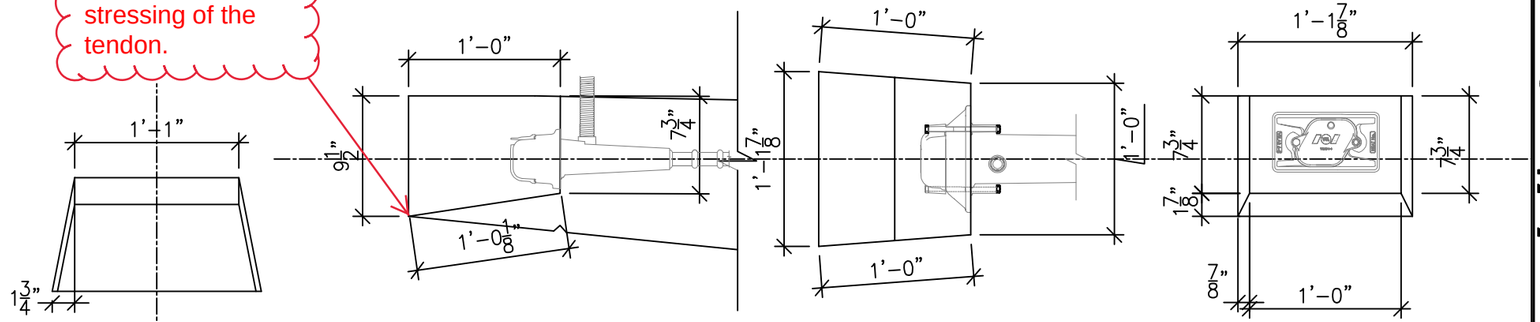

BLOCKOUT DETAIL B5 [2 TOTAL]
(BY OTHERS) SCALE: 1" = 1'-0"

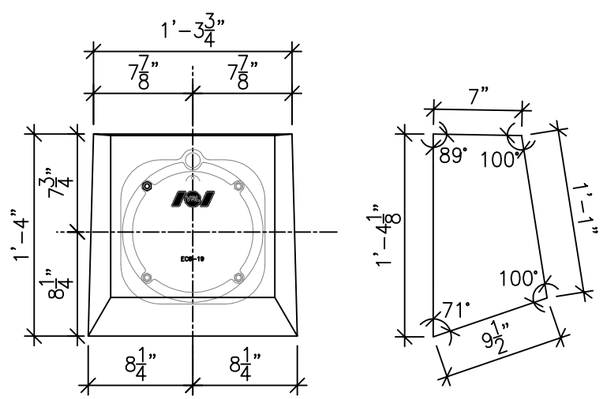

BLOCKOUT DETAIL B6 [3 TOTAL]
(BY OTHERS)
SCALE: 1" = 1'-0"

SHOP DRAWING REVIEW

_____ FOR INFORMATION ONLY
_____ ACCEPTED
_X_ ACCEPTED AS NOTED
_____ ACCEPTED AS NOTED & RESUBMIT
_____ NOT ACCEPTED

This review is only for general conformance with design intent of the project and general compliance with the information given in the contract documents. Review, corrections or comments made concerning the shop drawings during this review do not relieve the contractor from compliance with requirements of the drawings and specifications, nor relieve the contractor of contractual responsibility for any error or deviation from contract requirements. The contractor is responsible for confirming and correlating all quantities, dimensions and structural capabilities - Selecting fabrication processes and techniques of construction - Coordinating his work with that of all other trades - and performing his work in a safe and satisfactory manner.

FIGG Subconsultant:
Firm:
By:_____ Date:_____

FIGG BRIDGE ENGINEERS, Inc.
By: KLB Date: 5/25/2017

NO.	DATE	DESCRIPTION	BY	CHK
1	05/19/17	PER EOR COMMENT DATED 05/01/17	GP	SM
0	04/26/17	PER SOR DRAWINGS DATED FEB.2017	GP	SM

ISSUED FOR APPROVAL

structural TECHNOLOGIES
A Structural Group Company
STRUCTURAL TECHNOLOGIES/VSL LLC 2001 Blount Road Phone: 954/489-3991
Pompano Beach, FL office: Pompano Beach, FL 33069 Fax: 954/489-3992
Dallas, TX / Washington, DC / Denver, CO / Pompano Beach, FL / Atlanta, GA

DECK PT PLAN - BACK SPAN DETAILS

FIU PEDESTRIAN BRIDGE
MIAMI, FL
MUNILLA CONSTRUCTION MANAGEMENT, LLC (MCM)

THIS DOCUMENT, INCLUDING ANY DRAWINGS, SPECIFICATIONS, AND CALCULATIONS HEREIN, CONTAINS INFORMATION THAT IS PROPRIETARY TO STRUCTURAL TECHNOLOGIES LLC ("VSL"). THIS DOCUMENT AND THE INFORMATION CONTAINED HEREIN IS CONFIDENTIAL AND MAY NOT BE REPRODUCED OR DISCLOSED WITHOUT THE PRIOR WRITTEN CONSENT OF STRUCTURAL TECHNOLOGIES LLC ("VSL"). FURTHER, THE USE OF THIS DOCUMENT OR ANY INFORMATION PRESENTED HEREIN IS RESTRICTED TO THE SPECIFIC PROJECT AND PURPOSE FOR WHICH IT WAS PREPARED. ANY OTHER USE IS STRICTLY PROHIBITED. STRUCTURAL TECHNOLOGIES ("VSL") DISCLAIMS ANY LIABILITY FOR ANY UNAUTHORIZED, UNINTENDED, OR OTHER IMPERMISSIBLE USE OF THIS DOCUMENT OR ANY INFORMATION IT CONTAINS

NOT FOR CONSTRUCTION

SHARATH MURTHY
LICENSE
No. 79039
STATE OF FLORIDA
PROFESSIONAL ENGINEER

Structural Technologies LLC (VSL) SHOP DRAWING

These shop drawings illustrate the details of the VSL Post-Tensioning System. They were prepared in conformance with the structural design provided to VSL by project owner or it's representative. VSL took no part in the preparation or review of said structural design and VSL DISCLAIMS ANY LIABILITY for it. The stamp or seal of a VSL employees on these shop drawings pertains only to the transfer of the forces required by the engineer of record on the structural drawings, and not to the adequacy of the structural design. NO WARRANTY, EXPRESSED OR IMPLIED, as to the adequacy of the structural design is made by virtue of any such stamp or seal.

SCALE: VARIES
JOB NO: 420582
SHEET: PT02.5

MCM

Review is for general conformance with the Contract Documents. Comments shall not be construed as relieving the supplier/subcontractor from strict compliance with such documents. The supplier/subcontractor remain responsible for details and accuracy, for complying with standards of the industry regarding fabrication, assembly, erection and installation procedures.

- [x] REVIEWED
- [ ] REVISE & RESUBMIT
- [ ] REVIEWED AS NOTED
- [ ] REJECTED

By: AR

Date: 05/22/17

RELEASED FOR CONSTRUCTION

Structures Design Office – District 6

Department of Transportation

STATE OF FLORIDA

Date: 06/26/17

Reviewed By: CEG

Review is for general conformance with Contract Documents. Sole responsibility for correctness of dimensions, details, quantities and safety during fabrication and erection shall remain with the Contractor.

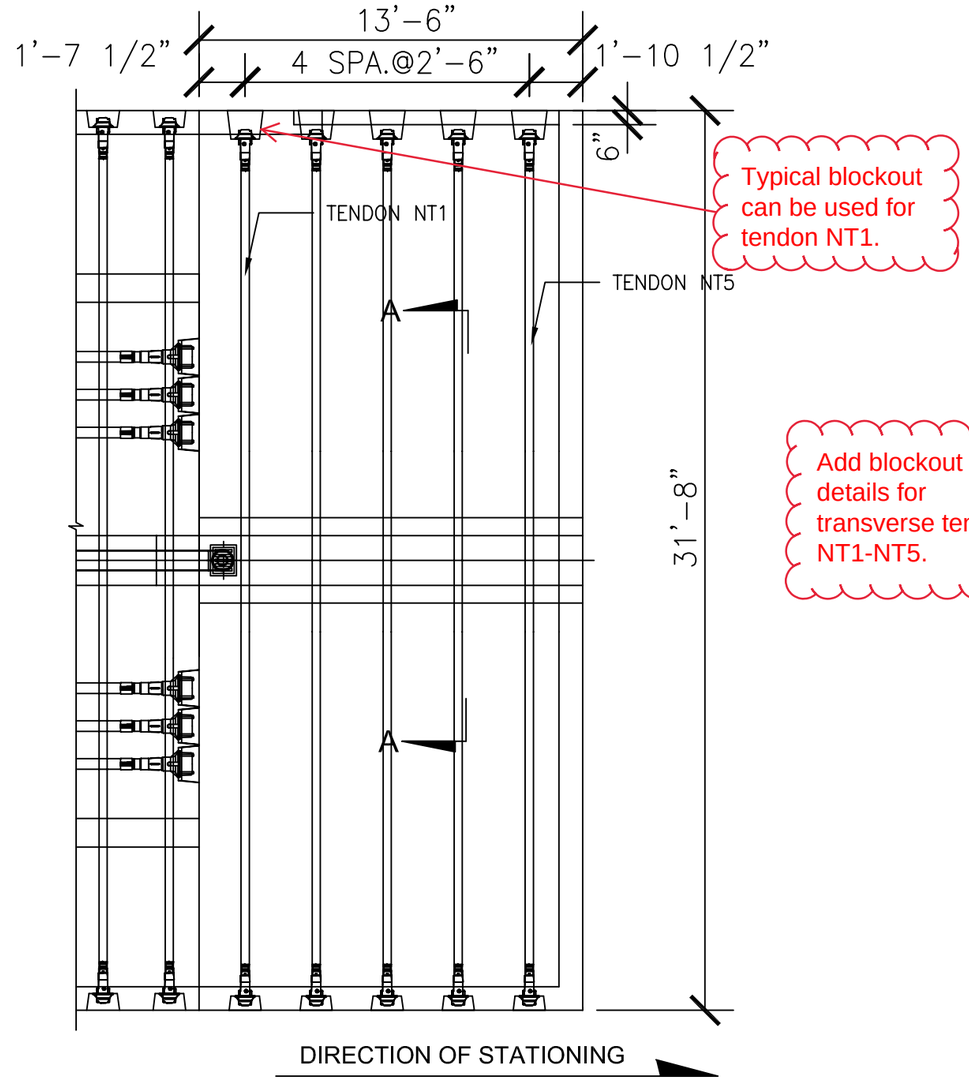

NORTH LANDING PLAN

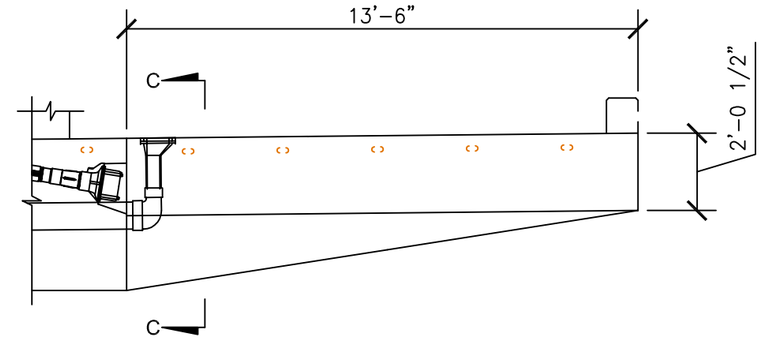

SECTION
B-B

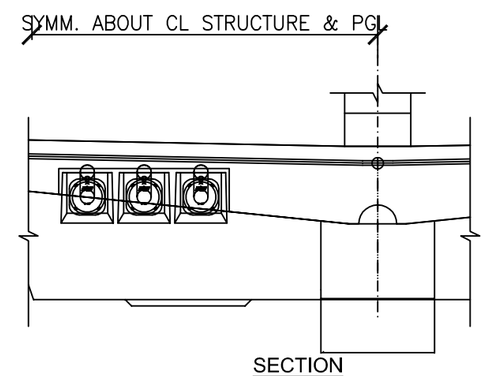

SECTION
C-C
(LOOKING DOWNSTATION)

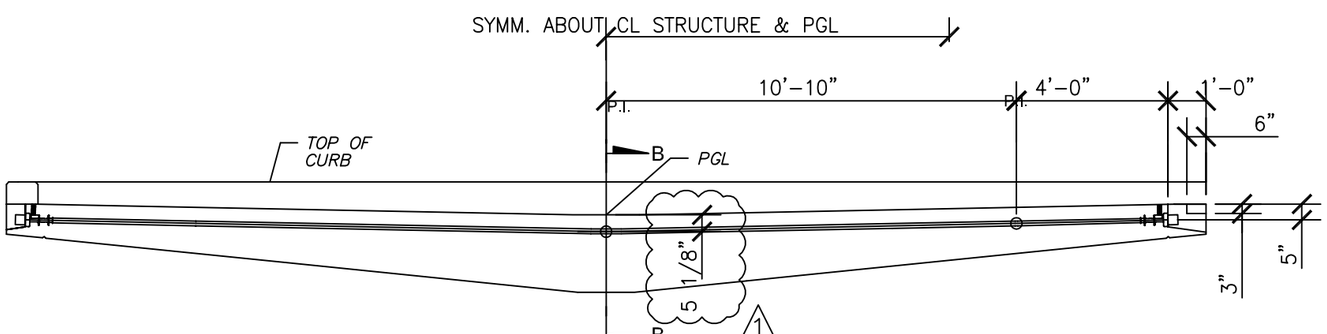

PLAN VIEW
A-A
(LOOKING DOWNSTATION)

SHOP DRAWING REVIEW

_____ FOR INFORMATION ONLY
_____ ACCEPTED
_X_ ACCEPTED AS NOTED
_____ ACCEPTED AS NOTED & RESUBMIT
_____ NOT ACCEPTED

This review is only for general conformance with design intent of the project and general compliance with the information given in the contract documents. Review, corrections or comments made concerning the shop drawings during this review do not relieve the contractor from compliance with requirements of the drawings and specifications, nor relieve the contractor of contractual responsibility for any error or deviation from contract requirements. The contractor is responsible for confirming and correlating all quantities, dimensions and structural capabilities - Selecting fabrication processes and techniques of construction - Coordinating his work with that of all other trades - and performing his work in a safe and satisfactory manner.

FIGG Subconsultant:
Firm:
By: _____ Date: _____

FIGG BRIDGE ENGINEERS, Inc.
By: KLB Date: 5/25/2017

NOT FOR CONSTRUCTION

SHARATH MURTHY
LICENSE
No. 79039
STATE OF FLORIDA
PROFESSIONAL ENGINEER
5/19/17

THIS DOCUMENT, INCLUDING ANY DRAWINGS, SPECIFICATIONS, AND CALCULATIONS HEREIN, CONTAINS INFORMATION THAT IS PROPRIETARY TO STRUCTURAL TECHNOLOGIES LLC ("VSL"). THIS DOCUMENT AND THE INFORMATION CONTAINED HEREIN IS CONFIDENTIAL AND MAY NOT BE REPRODUCED OR DISCLOSED WITHOUT THE PRIOR WRITTEN CONSENT OF STRUCTURAL TECHNOLOGIES LLC ("VSL"). FURTHER, THE USE OF THIS DOCUMENT OR ANY INFORMATION PRESENTED HEREIN IS RESTRICTED TO THE SPECIFIC PROJECT AND PURPOSE FOR WHICH IT WAS PREPARED. ANY OTHER USE IS STRICTLY PROHIBITED. STRUCTURAL TECHNOLOGIES ("VSL") DISCLAIMS ANY LIABILITY FOR ANY UNAUTHORIZED, UNINTENDED, OR OTHER IMPERMISSIBLE USE OF THIS DOCUMENT OR ANY INFORMATION IT CONTAINS

Structural Technologies LLC (VSL) SHOP DRAWING

These shop drawings illustrate the details of the VSL Post-Tensioning System. They were prepared in conformance with the structural design provided to VSL by project owner or it's representative. VSL took no part in the preparation or review of said structural design and VSL DISCLAIMS ANY LIABILITY for it. The stamp or seal of a VSL employees on these shop drawings pertains only to the transfer of the forces required by the engineer of record on the structural drawings, and not to the adequacy of the structural design. NO WARRANTY, EXPRESSED OR IMPLIED, as to the adequacy of the structural design is made by virtue of any such stamp or seal.

NO.	DATE	DESCRIPTION	BY	CHK
1	05/19/17	PER EOR COMMENT DATED 05/01/17	GP	SM
0	04/28/17	PER 90% DRAWINGS DATED FEB.2017	GP	SM

ISSUED FOR APPROVAL

structural TECHNOLOGIES
A Structural Group Company
STRUCTURAL TECHNOLOGIES/VSL, LLC
Pompano Beach, FL Office: 2001 Blount Road, Pompano Beach, FL 33069
Phone: 954/489-3991
Fax: 954/489-3992
Dallas, TX / Washington, DC / Denver, CO / Pompano Beach, FL / Atlanta, GA

DECK PT PLAN - NORTH LANDING

FIU PEDESTRIAN BRIDGE
MIAMI, FL
MUNILLA CONSTRUCTION MANAGEMENT, LLC (MCM)

SCALE: VARIES
JOB NO: 420582
SHEET: PT02.6

MCM

Review is for general conformance with the Contract Documents. Comments shall not be construed as relieving the supplier/subcontractor from strict compliance with such documents. The supplier/subcontractor remain responsible for details and accuracy, for complying with standards of the industry regarding fabrication, assembly, erection and installation procedures.

- [x] REVIEWED
- [ ] REVISE & RESUBMIT
- [ ] REVIEWED AS NOTED
- [ ] REJECTED

By: AR

Date: 05/22/17

RELEASED FOR CONSTRUCTION

Structures Design Office – District 6
Department of Transportation
STATE OF FLORIDA

Date: 06/26/17

Reviewed By: CEG

Review is for general conformance with Contract Documents. Sole responsibility for correctness of dimensions, details, quantities and safety during fabrication and erection shall remain with the Contractor.

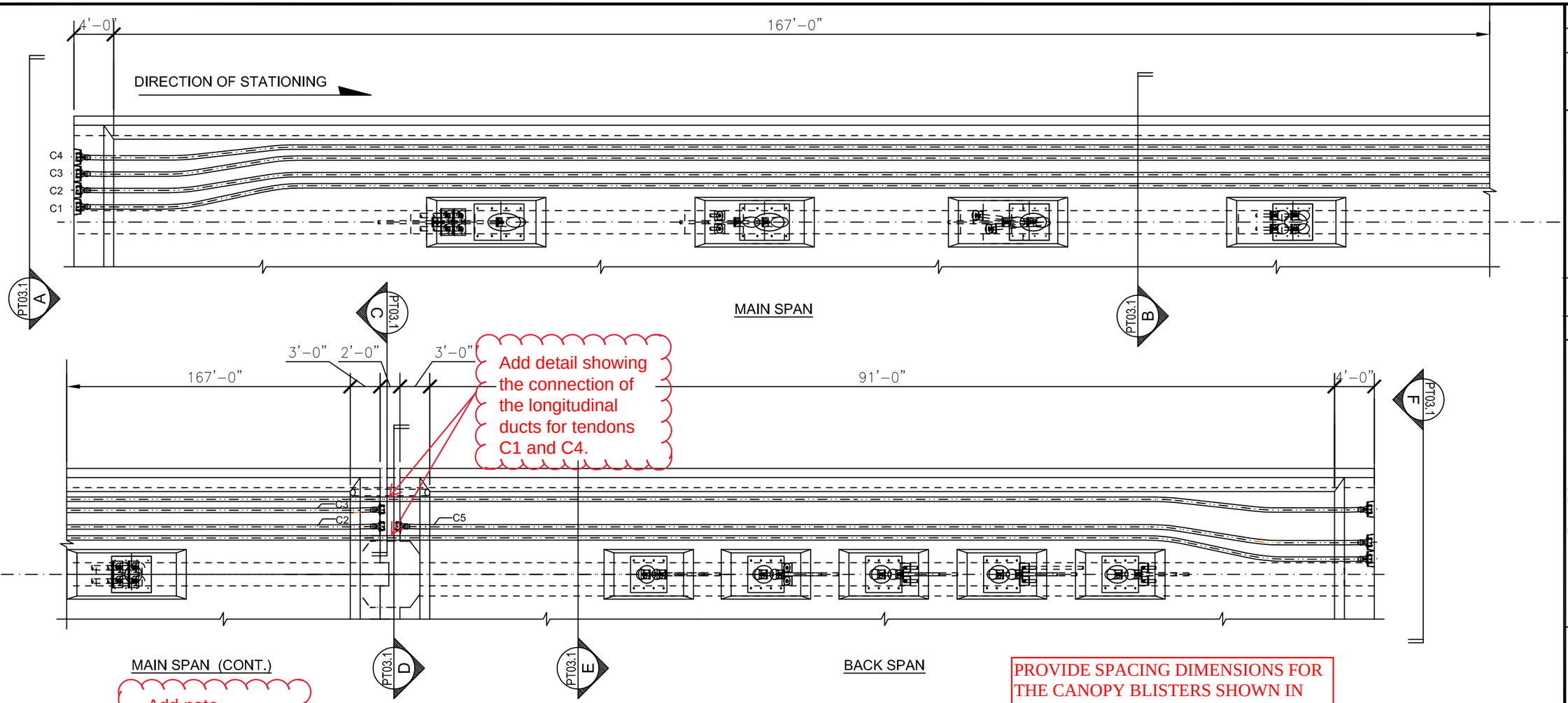

Add detail showing the connection of the longitudinal ducts for tendons C1 and C4.

Add note referencing Sheets B-109 & B-110 for overall stressing sequence.

PROVIDE SPACING DIMENSIONS FOR THE CANOPY BLISTERS SHOWN IN PLAN VIEW

LONGITUDINAL TENDON DATA TABLE [SYMM. ABOUT CL OF BRIDGE

LOCATION	TENDON DESIG.	NO. REQ.	TENDON SIZE	TENDON LENGTH (ft-in)	THEORETICAL ELONGATION (in) (BEFORE ANCHOR SET)		STRESS END	STRESSING FORCE / TENDON (kips)	STRESSING SEQUENCE
					100%	80%			
MAIN SPAN CANOPY	C2	2	12 X 0.6"	173'-5 1/4 "	1'-2 5/8"	11 11/16"	DOWNSTATION	531	1
	C3	2	12 X 0.6"	173'-5 1/4 "	1'-2 5/8"	11 11/16"	DOWNSTATION	534	2
BACK SPAN CANOPY	C5	2	12 X 0.6"	97'-5 1/4"	8 1/16"	6 7/16"	UPSTATION	519	3
MAIN & BACK SPAN CANOPY	C1	2	12 X 0.6"	272'-11 1/2"	1'-11 7/16"	1'-7 1/16"	UPSTATION	556	4
	C4	2	12 X 0.6"	272'-9 1/4"	1'-11 7/16"	1'-7 1/16"	UPSTATION	556	5

ELONGATION VALUES SHOWN ARE CALCULATED BY VSL AND DIFFER FROM PLAN SHEET B-69

SHOP DRAWING REVIEW

_____ FOR INFORMATION ONLY
_____ ACCEPTED
__X__ ACCEPTED AS NOTED
_____ ACCEPTED AS NOTED & RESUBMIT
_____ NOT ACCEPTED

This review is only for general conformance with design intent of the project and general compliance with the information given in the contract documents. Review, corrections or comments made concerning the shop drawings during this review do not relieve the contractor from compliance with requirements of the drawings and specifications, nor relieve the contractor of contractual responsibility for any error or deviation from contract requirements. The contractor is responsible for confirming and correlating all quantities, dimensions and structural capabilities - Selecting fabrication processes and techniques of construction - Coordinating his work with that of all other trades - and performing his work in a safe and satisfactory manner.

FIGG Subconsultant:
Firm: _____
By: _____ Date: _____

FIGG BRIDGE ENGINEERS, Inc.
By: KLB Date: 5/25/2017

NOT FOR CONSTRUCTION

SHARATH MURTHY LICENSE No. 79039 STATE OF FLORIDA PROFESSIONAL ENGINEER

THIS DOCUMENT, INCLUDING ANY DRAWINGS, SPECIFICATIONS, AND CALCULATIONS HEREIN, CONTAINS INFORMATION THAT IS PROPRIETARY TO STRUCTURAL TECHNOLOGIES LLC ("VSL"). THIS DOCUMENT AND THE INFORMATION CONTAINED HEREIN IS CONFIDENTIAL AND MAY NOT BE REPRODUCED OR DISCLOSED WITHOUT THE PRIOR WRITTEN CONSENT OF STRUCTURAL TECHNOLOGIES LLC ("VSL"). FURTHER, THE USE OF THIS DOCUMENT OR ANY INFORMATION PRESENTED HEREIN IS RESTRICTED TO THE SPECIFIC PROJECT AND PURPOSE FOR WHICH IT WAS PREPARED. ANY OTHER USE IS STRICTLY PROHIBITED. STRUCTURAL TECHNOLOGIES ("VSL") DISCLAIMS ANY LIABILITY FOR ANY UNAUTHORIZED, UNINTENDED, OR OTHER IMPERMISSIBLE USE OF THIS DOCUMENT OR ANY INFORMATION IT CONTAINS

Structural Technologies LLC (VSL) SHOP DRAWING

These shop drawings illustrate the details of the VSL Post-Tensioning System. They were prepared in conformance with the structural design provided to VSL by project owner or it's representative. VSL took no part in the preparation or review of said structural design and VSL DISCLAIMS ANY LIABILITY for it. The stamp or seal of a VSL employees on these shop drawings pertains only to the transfer of the forces required by the engineer of record on the structural drawings, and not to the adequacy of the structural design. NO WARRANTY, EXPRESSED OR IMPLIED, as to the adequacy of the structural design is made by virtue of any such stamp or seal.

NO.	DATE	DESCRIPTION	BY	CHK
1	05/19/17	PER EOR COMMENT DATED 05/01/17	GP	SM
0	04/28/17	PER 90% DRAWINGS DATED FEB.2017	GP	SM

ISSUED FOR APPROVAL / APPROVAL

structural TECHNOLOGIES A Structural Group Company
STRUCTURAL TECHNOLOGIES, LLC
Pompano Beach, FL Office: 2001 Blount Road, Pompano Beach, FL 33069
Phone: 954/489-3991 Fax: 954/489-3992
Dallas, TX / Washington, DC / Denver, CO / Pompano Beach, FL / Atlanta, GA

CANOPY PT PLAN

FIU PEDESTRIAN BRIDGE
MIAMI, FL
MUNILLA CONSTRUCTION MANAGEMENT, LLC (MCM)

SCALE: VARIES
JOB NO: 420582
SHEET: PT03

MCM

Review is for general conformance with the Contract Documents. Comments shall not be construed as relieving the supplier/subcontractor from strict compliance with such documents. The supplier/subcontractor remain responsible for details and accuracy, for complying with standards of the industry regarding fabrication, assembly, erection and installation procedures.

- [x] REVIEWED
- [ ] REVISE & RESUBMIT
- [ ] REVIEWED AS NOTED
- [ ] REJECTED

By: AR

Date: 05/22/17

RELEASED FOR CONSTRUCTION AS NOTED

Structures Design Office – District 6
Department of Transportation
STATE OF FLORIDA

Date: 6/27/17

Reviewed By: CEG

Review is for general conformance with Contract Documents. Sole responsibility for correctness of dimensions, details, quantities and safety during fabrication and erection shall remain with the Contractor.

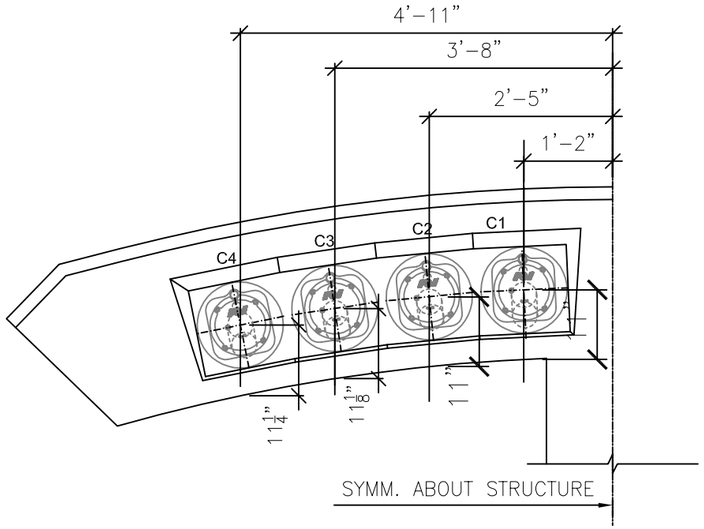

SECTION A

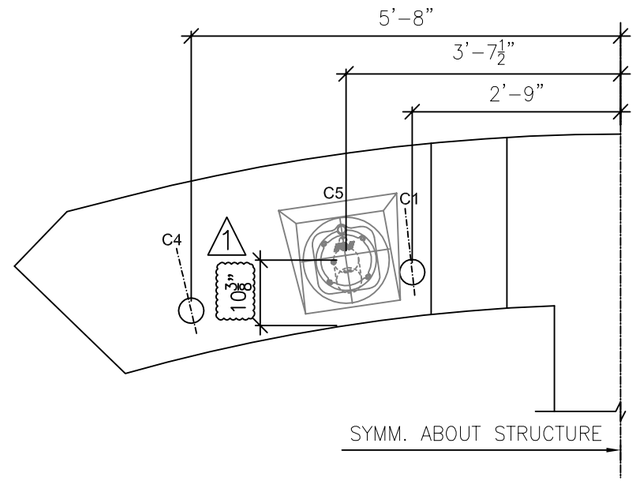

SECTION D

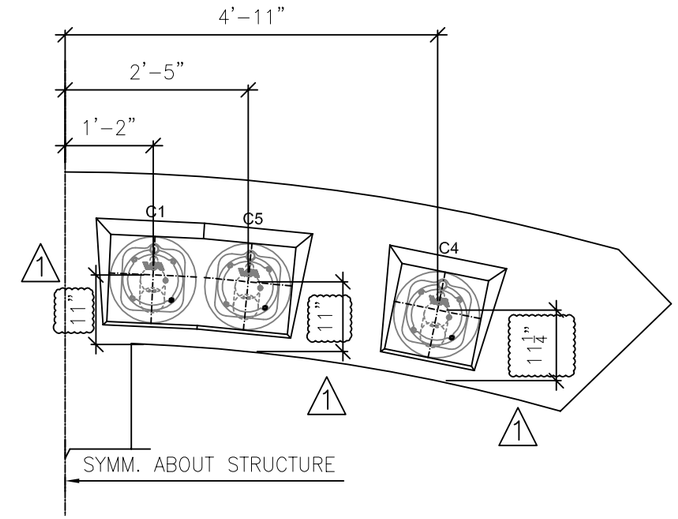

SECTION F

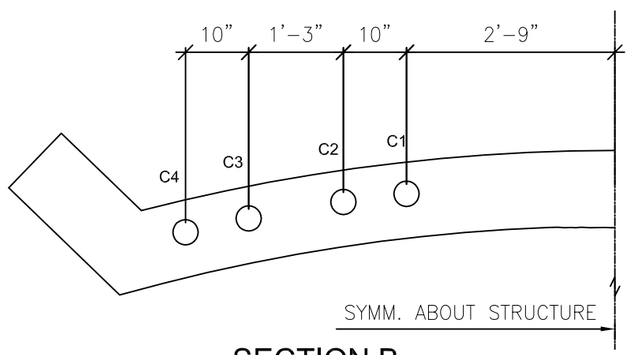

SECTION B

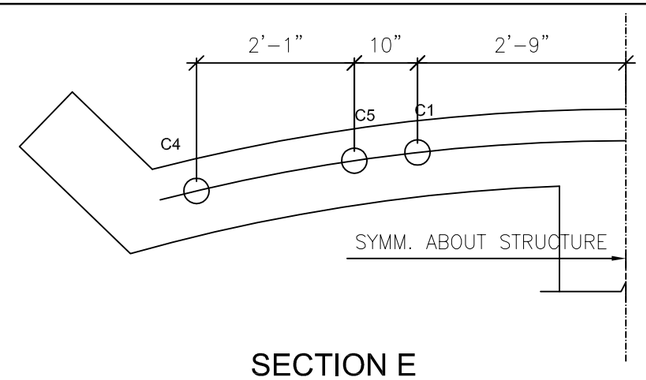

SECTION E

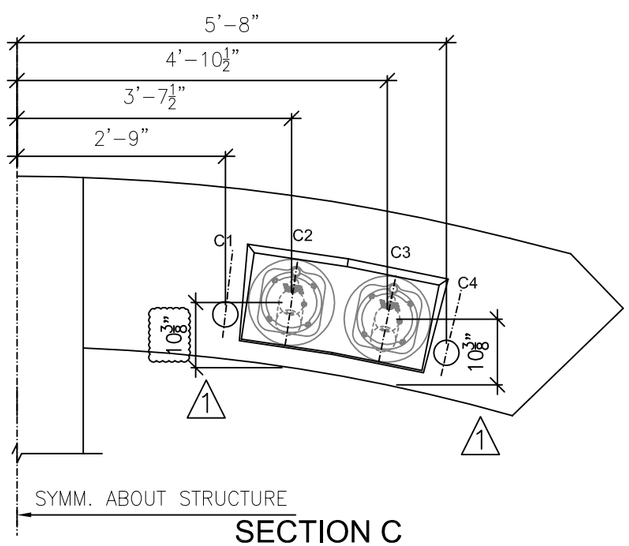

SECTION C

SHOP DRAWING REVIEW

_____ FOR INFORMATION ONLY
__X__ ACCEPTED
_____ ACCEPTED AS NOTED
_____ ACCEPTED AS NOTED & RESUBMIT
_____ NOT ACCEPTED

This review is only for general conformance with design intent of the project and general compliance with the information given in the contract documents. Review, corrections or comments made concerning the shop drawings during this review do not relieve the contractor from compliance with requirements of the drawings and specifications, nor relieve the contractor of contractual responsibility for any error or deviation from contract requirements. The contractor is responsible for confirming and correlating all quantities, dimensions and structural capabilities - Selecting fabrication processes and techniques of construction - Coordinating his work with that of all other trades - and performing his work in a safe and satisfactory manner.

FIGG Subconsultant:

Firm: _____

By: _____ Date: _____

FIGG BRIDGE ENGINEERS, Inc.

By: KLB Date: 5/25/2017

NOT FOR CONSTRUCTION

SHARATH MURTHY
LICENSE
No. 79039
STATE OF FLORIDA
PROFESSIONAL ENGINEER

THIS DOCUMENT, INCLUDING ANY DRAWINGS, SPECIFICATIONS, AND CALCULATIONS HEREIN, CONTAINS INFORMATION THAT IS PROPRIETARY TO STRUCTURAL TECHNOLOGIES LLC ("VSL"). THIS DOCUMENT AND THE INFORMATION CONTAINED HEREIN IS CONFIDENTIAL AND MAY NOT BE REPRODUCED OR DISCLOSED WITHOUT THE PRIOR WRITTEN CONSENT OF STRUCTURAL TECHNOLOGIES LLC ("VSL"). FURTHER, THE USE OF THIS DOCUMENT OR ANY INFORMATION PRESENTED HEREIN IS RESTRICTED TO THE SPECIFIC PROJECT AND PURPOSE FOR WHICH IT WAS PREPARED. ANY OTHER USE IS STRICTLY PROHIBITED. STRUCTURAL TECHNOLOGIES ("VSL") DISCLAIMS ANY LIABILITY FOR ANY UNAUTHORIZED, UNINTENDED, OR OTHER IMPERMISSIBLE USE OF THIS DOCUMENT OR ANY INFORMATION IT CONTAINS

Structural Technologies LLC (VSL) SHOP DRAWING

These shop drawings illustrate the details of the VSL Post-Tensioning System. They were prepared in conformance with the structural design provided to VSL by project owner or it's representative. VSL took no part in the preparation or review of said structural design and VSL DISCLAIMS ANY LIABILITY for it. The stamp or seal of a VSL employees on these shop drawings pertains only to the transfer of the forces required by the engineer of record on the structural drawings, and not to the adequacy of the structural design. NO WARRANTY, EXPRESSED OR IMPLIED, as to the adequacy of the structural design is made by virtue of any such stamp or seal.

NO.	DATE	DESCRIPTION	ISSUED FOR	BY	CHK
1	05/19/17	PER EOR COMMENT DATED 05/01/17	APPROVAL	GP	SM
0	04/26/17	PER 90% DRAWINGS DATED FEB.2017	APPROVAL	GP	SM

structural TECHNOLOGIES
A Structural Group Company
STRUCTURAL TECHNOLOGIES/FG, LLC.
Pompano Beach, FL Office: 2001 Blount Road Pompano Beach, FL 33069
Phone: 954/489-3991
Fax: 954/489-3992
Dallas, TX / Washington, DC / Denver, CO / Pompano Beach, FL / Atlanta, GA

CANOPY PT DETAILS

FIU PEDESTRIAN BRIDGE
MIAMI, FL
MUNILLA CONSTRUCTION MANAGEMENT, LLC (MCM)

SCALE: VARIES
JOB NO: 420582
SHEET: PT03.1

MCM

Review is for general conformance with the Contract Documents. Comments shall not be construed as relieving the supplier/subcontractor from strict compliance with such documents. The supplier/subcontractor remain responsible for details and accuracy, for complying with standards of the industry regarding fabrication, assembly, erection and installation procedures.

- [x] REVIEWED
- [ ] REVISE & RESUBMIT
- [ ] REVIEWED AS NOTED
- [ ] REJECTED

By: AR

Date: 05/22/17

RELEASED FOR CONSTRUCTION

Structures Design Office – District 6
Department of Transportation
STATE OF FLORIDA

Date: 06/26/17

Reviewed By: CEG

Review is for general conformance with Contract Documents. Sole responsibility for correctness of dimensions, details, quantities and safety during fabrication and erection shall remain with the Contractor.

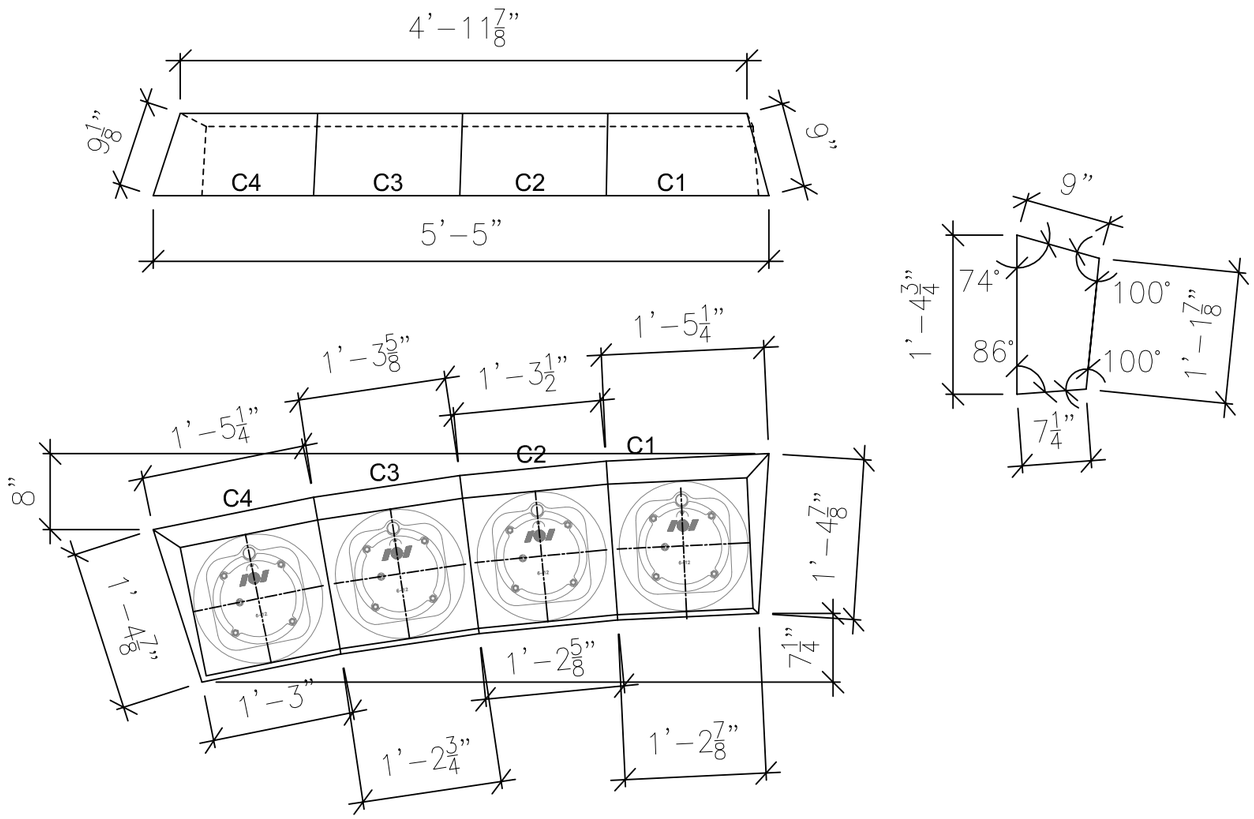

BLOCKOUT DETAIL B1

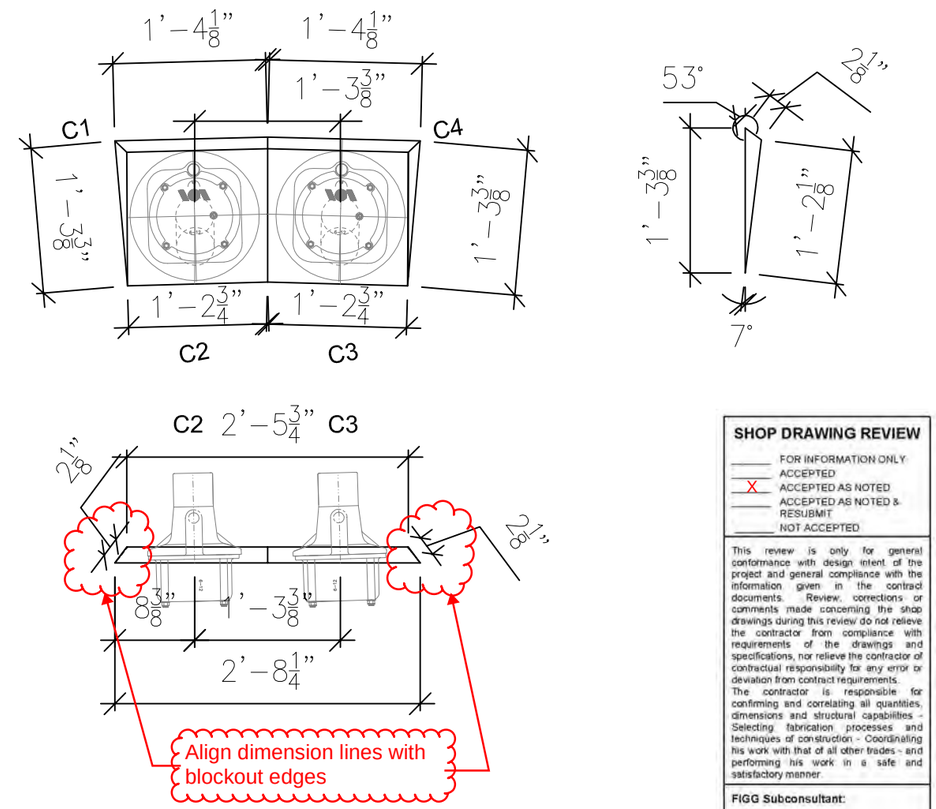

BLOCKOUT DETAIL B2

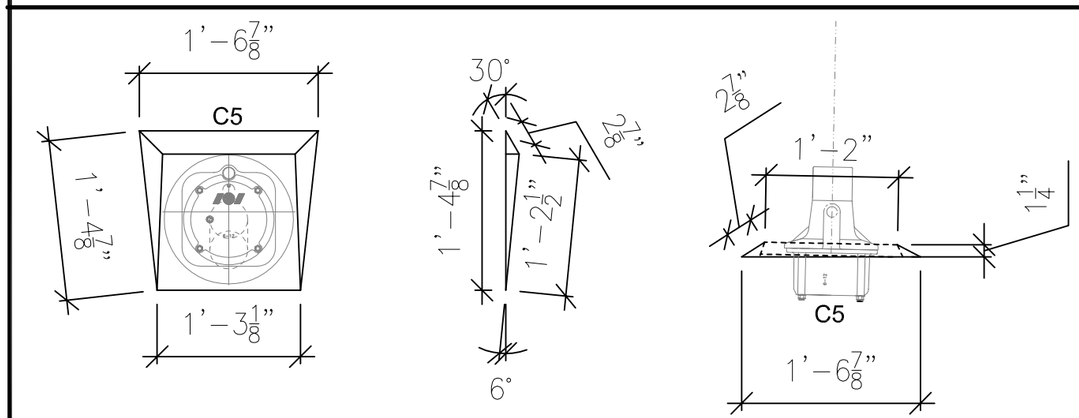

BLOCKOUT DETAIL B3

SHOP DRAWING REVIEW

_____ FOR INFORMATION ONLY
_____ ACCEPTED
X ACCEPTED AS NOTED
_____ ACCEPTED AS NOTED & RESUBMIT
_____ NOT ACCEPTED

This review is only for general conformance with design intent of the project and general compliance with the information given in the contract documents. Review, corrections or comments made concerning the shop drawings during this review do not relieve the contractor from compliance with requirements of the drawings and specifications, nor relieve the contractor of contractual responsibility for any error or deviation from contract requirements.
The contractor is responsible for confirming and correlating all quantities, dimensions and structural capabilities - Selecting fabrication processes and techniques of construction - Coordinating his work with that of all other trades - and performing his work in a safe and satisfactory manner.

FIGG Subconsultant:

Firm: _____

By: _____ Date: _____

FIGG BRIDGE ENGINEERS, Inc.

By: KLB Date: 5/25/2017

NO.	DATE	DESCRIPTION	ISSUED FOR	BY	CHK
1	05/19/17	PER EOR COMMENT DATED 05/01/17	APPROVAL	GP	SM
0	04/28/17	PER 90% DRAWINGS DATED FEB.2017	APPROVAL	GP	SM

structural TECHNOLOGIES
A Structural Group Company
STRUCTURAL TECHNOLOGIES/VSL, LLC
Pompano Beach, FL office: 2001 Blount Road Pompano Beach, FL 33069
Phone: 954/489-3991 Fax: 954/489-3992
Dallas, TX / Washington, DC / Denver, CO / Pompano Beach, FL / Atlanta, GA

CANOPY PT BLOCKOUT DETAILS

FIU PEDESTRIAN BRIDGE
MIAMI, FL
MUNILLA CONSTRUCTION MANAGEMENT, LLC (MCM)

NOT FOR CONSTRUCTION

SHARATH MURTHY
LICENSE
No. 79039
STATE OF FLORIDA
PROFESSIONAL ENGINEER

THIS DOCUMENT, INCLUDING ANY DRAWINGS, SPECIFICATIONS, AND CALCULATIONS HEREIN, CONTAINS INFORMATION THAT IS PROPRIETARY TO STRUCTURAL TECHNOLOGIES LLC ("VSL"). THIS DOCUMENT AND THE INFORMATION CONTAINED HEREIN IS CONFIDENTIAL AND MAY NOT BE REPRODUCED OR DISCLOSED WITHOUT THE PRIOR WRITTEN CONSENT OF STRUCTURAL TECHNOLOGIES LLC ("VSL"). FURTHER, THE USE OF THIS DOCUMENT OR ANY INFORMATION PRESENTED HEREIN IS RESTRICTED TO THE SPECIFIC PROJECT AND PURPOSE FOR WHICH IT WAS PREPARED. ANY OTHER USE IS STRICTLY PROHIBITED. STRUCTURAL TECHNOLOGIES ("VSL") DISCLAIMS ANY LIABILITY FOR ANY UNAUTHORIZED, UNINTENDED, OR OTHER IMPERMISSIBLE USE OF THIS DOCUMENT OR ANY INFORMATION IT CONTAINS

Structural Technologies LLC (VSL) SHOP DRAWING

These shop drawings illustrate the details of the VSL Post-Tensioning System. They were prepared in conformance with the structural design provided to VSL by project owner or it's representative. VSL took no part in the preparation or review of said structural design and VSL DISCLAIMS ANY LIABILITY for it. The stamp or seal of a VSL employees on these shop drawings pertains only to the transfer of the forces required by the engineer of record on the structural drawings, and not to the adequacy of the structural design. NO WARRANTY, EXPRESSED OR IMPLIED, as to the adequacy of the structural design is made by virtue of any such stamp or seal.

SCALE: VARIES
JOB NO: 420582
SHEET: PT03.2

MCM

Review is for general conformance with the Contract Documents. Comments shall not be construed as relieving the supplier/subcontractor from strict compliance with such documents. The supplier/subcontractor remain responsible for details and accuracy, for complying with standards of the industry regarding fabrication, assembly, erection and installation procedures.

- [x] REVIEWED
- [ ] REVISE & RESUBMIT
- [ ] REVIEWED AS NOTED
- [ ] REJECTED

By: AR

Date: 05/22/17

RELEASED FOR CONSTRUCTION

Structures Design Office – District 6
Department of Transportation
STATE OF FLORIDA

Date: 06/26/17

Reviewed By: CEG

Review is for general conformance with Contract Documents. Sole responsibility for correctness of dimensions, details, quantities and safety during fabrication and erection shall remain with the Contractor.

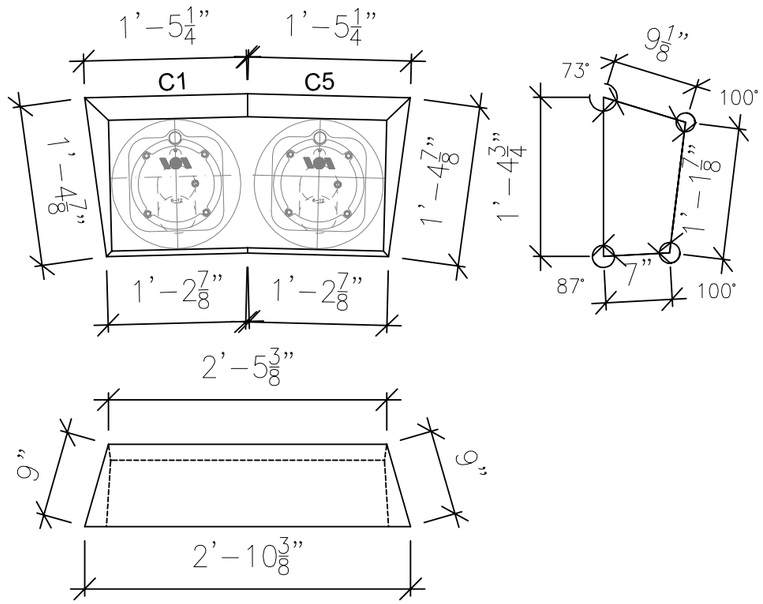

BLOCKOUT DETAIL B4

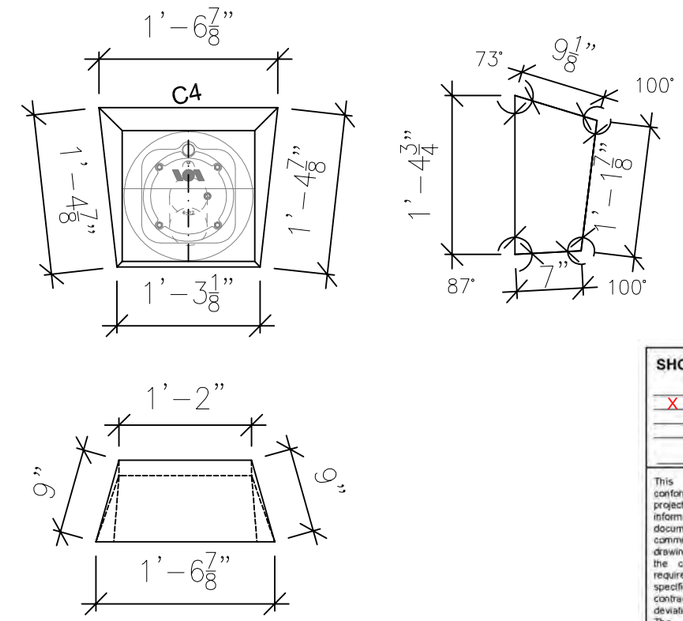

BLOCKOUT DETAIL B5

SHOP DRAWING REVIEW

- ____ FOR INFORMATION ONLY
- X ACCEPTED
- ____ ACCEPTED AS NOTED
- ____ ACCEPTED AS NOTED & RESUBMIT
- ____ NOT ACCEPTED

This review is only for general conformance with design intent of the project and general compliance with the information given in the contract documents. Review, corrections or comments made concerning the shop drawings during this review do not relieve the contractor from compliance with requirements of the drawings and specifications, nor relieve the contractor of contractual responsibility for any error or deviation from contract requirements.
The contractor is responsible for confirming and correlating all quantities, dimensions and structural capabilities - Selecting fabrication processes and techniques of construction - Coordinating his work with that of all other trades - and performing his work in a safe and satisfactory manner.

FIGG Subconsultant:
Firm: _____
By: _____ Date: _____

FIGG BRIDGE ENGINEERS, Inc.
By: KLB Date: 5/25/2017

NOT FOR CONSTRUCTION

SHARATH MURTHY
LICENSE
No. 79039
STATE OF FLORIDA
PROFESSIONAL ENGINEER

THIS DOCUMENT, INCLUDING ANY DRAWINGS, SPECIFICATIONS, AND CALCULATIONS HEREIN, CONTAINS INFORMATION THAT IS PROPRIETARY TO STRUCTURAL TECHNOLOGIES LLC ("VSL"). THIS DOCUMENT AND THE INFORMATION CONTAINED HEREIN IS CONFIDENTIAL AND MAY NOT BE REPRODUCED OR DISCLOSED WITHOUT THE PRIOR WRITTEN CONSENT OF STRUCTURAL TECHNOLOGIES LLC ("VSL"). FURTHER, THE USE OF THIS DOCUMENT OR ANY INFORMATION PRESENTED HEREIN IS RESTRICTED TO THE SPECIFIC PROJECT AND PURPOSE FOR WHICH IT WAS PREPARED. ANY OTHER USE IS STRICTLY PROHIBITED. STRUCTURAL TECHNOLOGIES ("VSL") DISCLAIMS ANY LIABILITY FOR ANY UNAUTHORIZED, UNINTENDED, OR OTHER IMPERMISSIBLE USE OF THIS DOCUMENT OR ANY INFORMATION IT CONTAINS

Structural Technologies LLC (VSL) SHOP DRAWING

These shop drawings illustrate the details of the VSL Post-Tensioning System. They were prepared in conformance with the structural design provided to VSL by project owner or it's representative. VSL took no part in the preparation or review of said structural design and VSL DISCLAIMS ANY LIABILITY for it. The stamp or seal of a VSL employees on these shop drawings pertains only to the transfer of the forces required by the engineer of record on the structural drawings, and not to the adequacy of the structural design. NO WARRANTY, EXPRESSED OR IMPLIED, as to the adequacy of the structural design is made by virtue of any such stamp or seal.

NO.	DATE	DESCRIPTION	ISSUED FOR	BY	CHK
1	05/19/17	PER EOR COMMENT DATED 05/01/17	APPROVAL	GP	SM
0	04/28/17	PER 90% DRAWINGS DATED FEB.2017	APPROVAL	GP	SM

structural TECHNOLOGIES
A Structural Group Company
STRUCTURAL TECHNOLOGIES/VSL, LLC
Pompano Beach, FL office: 2001 Blount Road Pompano Beach, FL 33069
Phone: 954/489-3991
Fax: 954/489-3992
Dallas, TX / Washington, DC / Denver, CO / Pompano Beach, FL / Atlanta, GA

CANOPY PT BLOCKOUT DETAILS 2

FIU PEDESTRIAN BRIDGE
MIAMI, FL
MUNILLA CONSTRUCTION MANAGEMENT, LLC (MCM)

SCALE: VARIES
JOB NO: 420582
SHEET: PT03.3

MCM

Review is for general conformance with the Contract Documents. Comments shall not be construed as relieving the supplier/subcontractor from strict compliance with such documents. The supplier/subcontractor remain responsible for details and accuracy, for complying with standards of the industry regarding fabrication, assembly, erection and installation procedures.

- [x] REVIEWED
- [ ] REVISE & RESUBMIT
- [ ] REVIEWED AS NOTED
- [ ] REJECTED

By: AR

Date: 05/22/17

RELEASED FOR CONSTRUCTION

Structures Design Office – District 6
Department of Transportation
STATE OF FLORIDA

Date: 06/26/17

Reviewed By: CEG

Review is for general conformance with Contract Documents. Sole responsibility for correctness of dimensions, details, quantities and safety during fabrication and erection shall remain with the Contractor.

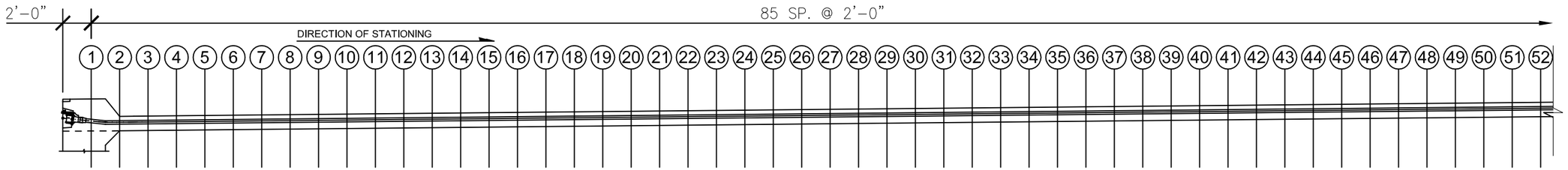

MAIN SPAN
SCALE: 1/8" = 1'-0"

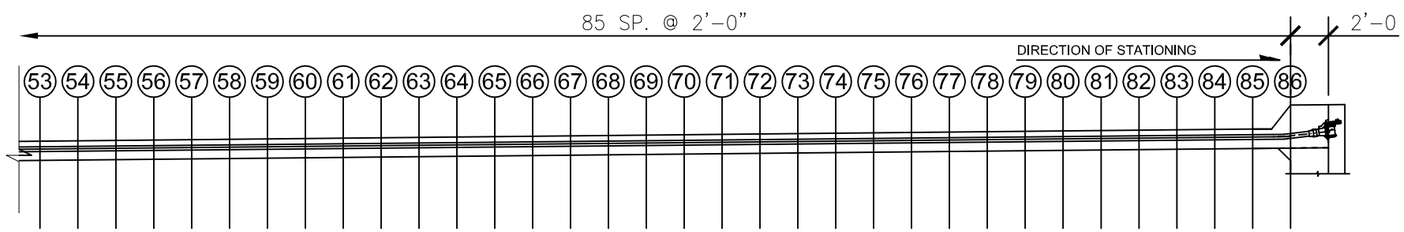

MAIN SPAN
SCALE: 1/8" = 1'-0"

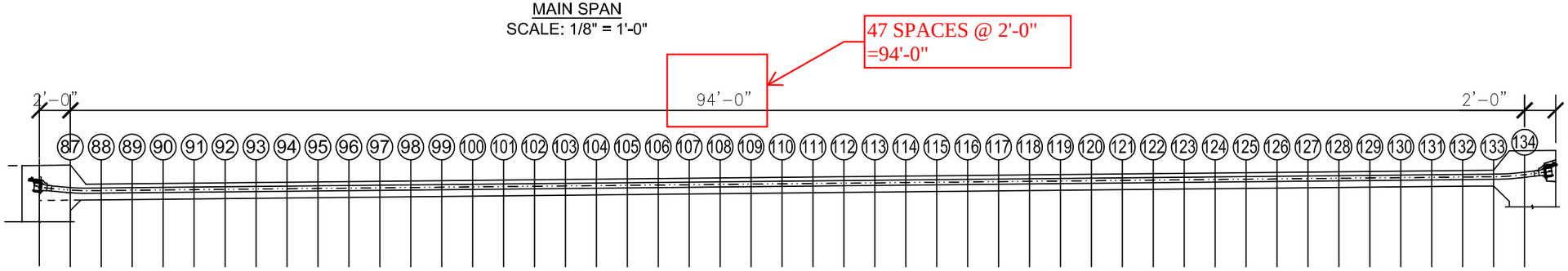

BACK SPAN
SCALE: 1/8" = 1'-0"

SHOP DRAWING REVIEW

- ____ FOR INFORMATION ONLY
- ____ ACCEPTED
- X ACCEPTED AS NOTED
- ____ ACCEPTED AS NOTED & RESUBMIT
- ____ NOT ACCEPTED

This review is only for general conformance with design intent of the project and general compliance with the information given in the contract documents. Review, corrections or comments made concerning the shop drawings during this review do not relieve the contractor from compliance with requirements of the drawings and specifications, nor relieve the contractor of contractual responsibility for any error or deviation from contract requirements. The contractor is responsible for confirming and correlating all quantities, dimensions and structural capabilities - Selecting fabrication processes and techniques of construction - Coordinating his work with that of all other trades - and performing his work in a safe and satisfactory manner.

FIGG Subconsultant:
Firm:
By: ____ Date: ____

FIGG BRIDGE ENGINEERS, Inc.
By: KLB Date: 5/25/2017

TENDON SUPPORT HEIGHT SCHEDULE (MAIN SPAN CANOPY)

TENDON DESINATION	1	2 THRU 85	86
C1	** 5 1/4"	5 1/4"	5 1/4"
C2	** 5 1/4"	5 1/4"	** 5 1/4"
C3	** 5 1/4"	5 1/4"	** 5 1/4"
C4	** 5 1/4"	5 1/4"	5 1/4"

1

TENDON SUPPORT HEIGHT SCHEDULE (BACK SPAN CANOPY)

TENDON DESINATION	87	88 THRU 133	134
C1	5 1/4"	5 1/4"	** 5 1/4"
C4	5 1/4"	5 1/4"	** 5 1/4"
C5	** 5 1/4"	5 1/4"	** 5 1/4"

1

** INDICATES ANCHORAGE
DIMENSION IS FROM BOTTOM OF SOFFIT TO BOTTOM OF DUCT

1

NOT FOR CONSTRUCTION

SHARATH MURTHY
LICENSE
No. 79039
STATE OF FLORIDA
PROFESSIONAL ENGINEER

THIS DOCUMENT, INCLUDING ANY DRAWINGS, SPECIFICATIONS, AND CALCULATIONS HEREIN, CONTAINS INFORMATION THAT IS PROPRIETARY TO STRUCTURAL TECHNOLOGIES LLC ("VSL"). THIS DOCUMENT AND THE INFORMATION CONTAINED HEREIN IS CONFIDENTIAL AND MAY NOT BE REPRODUCED OR DISCLOSED WITHOUT THE PRIOR WRITTEN CONSENT OF STRUCTURAL TECHNOLOGIES LLC ("VSL"). FURTHER, THE USE OF THIS DOCUMENT OR ANY INFORMATION PRESENTED HEREIN IS RESTRICTED TO THE SPECIFIC PROJECT AND PURPOSE FOR WHICH IT WAS PREPARED. ANY OTHER USE IS STRICTLY PROHIBITED. STRUCTURAL TECHNOLOGIES ("VSL") DISCLAIMS ANY LIABILITY FOR ANY UNAUTHORIZED, UNINTENDED, OR OTHER IMPERMISSIBLE USE OF THIS DOCUMENT OR ANY INFORMATION IT CONTAINS

Structural Technologies LLC (VSL) SHOP DRAWING

These shop drawings illustrate the details of the VSL Post-Tensioning System. They were prepared in conformance with the structural design provided to VSL by project owner or it's representative. VSL took no part in the preparation or review of said structural design and VSL DISCLAIMS ANY LIABILITY for it. The stamp or seal of a VSL employees on these shop drawings pertains only to the transfer of the forces required by the engineer of record on the structural drawings, and not to the adequacy of the structural design. NO WARRANTY, EXPRESSED OR IMPLIED, as to the adequacy of the structural design is made by virtue of any such stamp or seal.

NO.	DATE	DESCRIPTION	ISSUED FOR	BY	CHK
1	05/19/17	PER EOR COMMENT DATED 05/01/17	APPROVAL	GP	SM
0	04/28/17	PER 90% DRAWINGS DATED FEB.2017	APPROVAL	GP	SM

structural TECHNOLOGIES
A Structural Group Company
STRUCTURAL TECHNOLOGIES/VSL, LLC
Pompano Beach, FL office:
2001 Blount Road
Pompano Beach, FL 33069
Phone: 954/489-3991
Fax: 954/489-3992
Dallas, TX / Washington, DC / Denver, CO / Pompano Beach, FL / Atlanta, GA

CANOPY PT PROFILE

FIU PEDESTRIAN BRIDGE
MIAMI, FL
MUNILLA CONSTRUCTION MANAGEMENT, LLC (MCM)

SCALE: VARIES
JOB NO: 420582
SHEET: PT03.4

MCM

Review is for general conformance with the Contract Documents. Comments shall not be construed as relieving the supplier/subcontractor from strict compliance with such documents. The supplier/subcontractor remain responsible for details and accuracy, for complying with standards of the industry regarding fabrication, assembly, erection and installation procedures.

- [x] REVIEWED
- [ ] REVISE & RESUBMIT
- [ ] REVIEWED AS NOTED
- [ ] REJECTED

By: AR

Date: 05/22/17

RELEASED FOR CONSTRUCTION AS NOTED

Structures Design Office – District 6
Department of Transportation
STATE OF FLORIDA

Date: 6/27/17

Reviewed By: CEG

Review is for general conformance with Contract Documents. Sole responsibility for correctness of dimensions, details, quantities and safety during fabrication and erection shall remain with the Contractor.

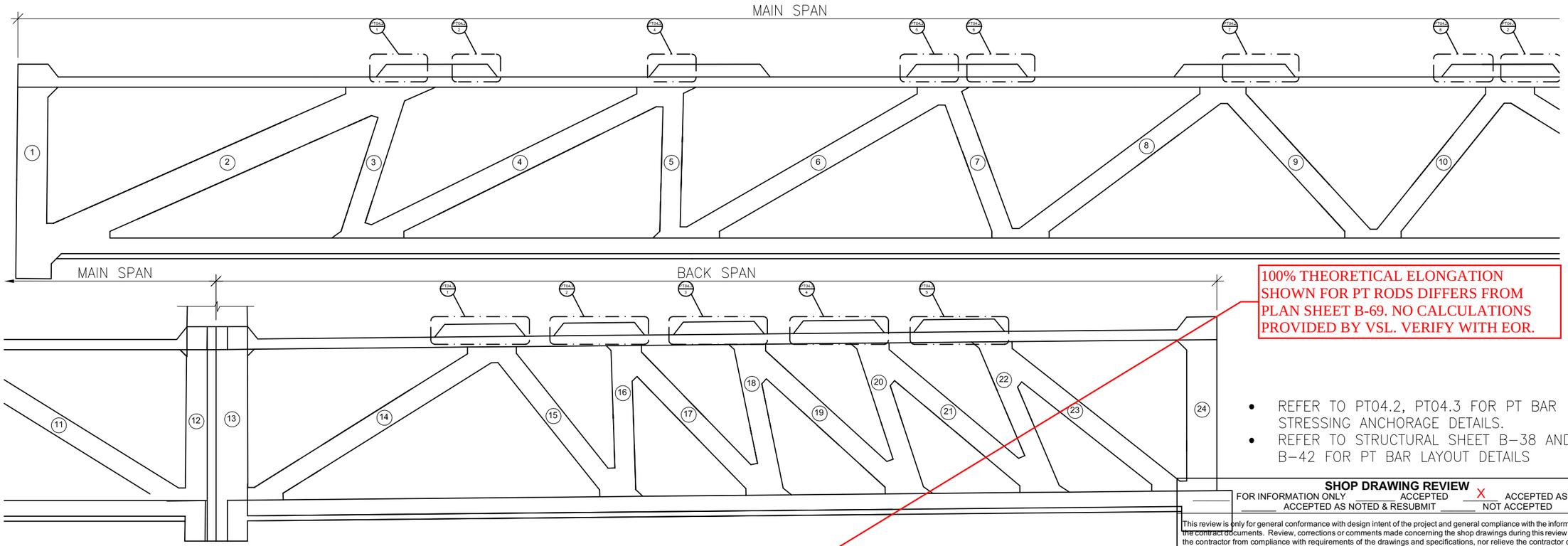

100% THEORETICAL ELONGATION SHOWN FOR PT RODS DIFFERS FROM PLAN SHEET B-69. NO CALCULATIONS PROVIDED BY VSL. VERIFY WITH EOR.

- REFER TO PT04.2, PT04.3 FOR PT BAR STRESSING ANCHORAGE DETAILS.
- REFER TO STRUCTURAL SHEET B-38 AND B-42 FOR PT BAR LAYOUT DETAILS

P.T. BAR DATA TABLE

LOCATION	BAR DESIG.	NO. REQ.	BAR SIZE	BAR LENGTH (ft-in)	BAR LENGTH FROM PT SHOP DWG (ft-in)	JACKING FORCE / BAR (kips)	STRESSING END*	THEORETICAL ELONGATION (in)	STRESS SEQUENCE	REMARK
2	A	1	1 3/4"	42'-11"	44'-3/8"	280	UPSTATION	1.87	1	NO GROUT, TO BE DESTRESSED
	B	1	1 3/4"	42'-9"	43'-9 3/8"	280	UPSTATION	1.86	2	NO GROUT, TO BE DESTRESSED
3	A	4	1 3/4"	18'-1"	19'-1 3/8"	280	UPSTATION	0.79	5	
5	A	2	1 3/8"	17'-6"	18'-3 11/16"	166	UPSTATION	0.76	7	
6	A	2	1 3/4"	34'-9 3/4"	36'-4 3/8"	280	UPSTATION	1.52	9	
7	A	1	1 3/4"	18'-4"	19'-4 3/8"	280	UPSTATION	0.80	10	
8	A	4	1 3/4"	29'-0 3/4"	30'-1"	280	UPSTATION	1.27	8	
10	A	4	2 1/2"	22'-0"	22'-7"	389	UPSTATION	0.68	6	
11	A	1	1 3/4"	33'-0"	34'-0 3/8"	280	UPSTATION	1.44	3	NO GROUT, TO BE DESTRESSED
	B	1	1 3/4"	33'-2 1/4"	34'-2 5/8"	280	UPSTATION	1.45	4	NO GROUT, TO BE DESTRESSED
15	A	4	1 3/4"	21'-11¾"	23'-0"	240	UPSTATION	0.82	12	
16	A	1	1 3/8"	17'-6"	18'-3 3/4"	142	UPSTATION	0.65	14	
17	A	4	1 3/8"	24'-4"	25'-1 3/4"	166	UPSTATION	1.06	16	
18	A	1	1 3/8"	17'-9 ¾"	18'-7 1/2"	119	UPSTATION	0.56	18	
19	A	2	1 3/8"	25'-10 ½"	26'-8 1/4"	166	UPSTATION	1.12	20	
20	A	1	1 3/8"	18'-4 1/2"	19'-2 1/4"	142	UPSTATION	0.68	19	
21	A	2	1 3/8"	27'-1 $\frac{1}{4}$"	27'-11"	119	UPSTATION	0.84	17	
22	A	2	1 3/8"	18'-11 $\frac{1}{4}$"	19'-8"	166	UPSTATION	0.82	15	
23	A	2	1 3/8"	28'-1"	28'-10 3/4"	119	UPSTATION	0.88	13	
DIAPHRAGM/13		2	1 3/8"	8'-0 1/2"	9'-5"	50	UPSTATION	0.11	11	SEE STRUCTURAL B-46 FOR MORE DETAILS

DIAPHRAGM PT BAR. EOR TO VERIFY JACKING FORCE, STRESS SEQUENCE, PT BAR LENGTH AND ELONGATION SHOWN. INFORMATION NOT IN RFC PLANS.

*NOTE:

- FOR VERTICAL TENDONS AND BARS, UPSTATION DENOTES TOP ANCHOR, DOWNSTATION DENOTES BOTTOM ANCHOR
- MIN CONCRETE STRENGTH AT STRESSING = 6000 PSI
- MIN CONCRETE COVER TO PT BAR (DEAD END) IS 2" (T.Y.P)
- MIN CONCRETE COVER TO PT BAR GROUT CAP (STRESSING END) IS 2-1/4" (T.Y.P)
- BEARING PLATE SIZE:
  1-3/8" BAR – 6" X 6" X 1-½ "
  1-3/4" BAR – 8" X 8" X 2"
  2-1/2" BAR – 10" X 10" X 2-¼"

BEARING PLATE SIZES SHOWN DIFFER FROM SHEETS B-38 & B-42.VERIFY W/ EOR.

Add note referencing Sheets B-109 & B-110 for overall stressing sequence.

NOT FOR CONSTRUCTION

SHARATH MURTHY LICENSE No. 79039 STATE OF FLORIDA PROFESSIONAL ENGINEER

SHOP DRAWING REVIEW

FOR INFORMATION ONLY _____ ACCEPTED __X__ ACCEPTED AS NOTED
_____ ACCEPTED AS NOTED & RESUBMIT _____ NOT ACCEPTED

This review is only for general conformance with design intent of the project and general compliance with the information given in the contract documents. Review, corrections or comments made concerning the shop drawings during this review do not relieve the contractor from compliance with requirements of the drawings and specifications, nor relieve the contractor of contractual responsibility for any error or deviation from contract requirements. The contractor is responsible for confirming and correlating all quantities, dimensions and structural capabilities - Selecting fabrication processes and techniques of construction - Coordinating his work with that of all other trades - and performing his work in a safe and satisfactory manner.

FIGG BRIDGE ENGINEERS, INC. By: KLB Date: 5/25/2017

THIS DOCUMENT, INCLUDING ANY DRAWINGS, SPECIFICATIONS, AND CALCULATIONS HEREIN, CONTAINS INFORMATION THAT IS PROPRIETARY TO STRUCTURAL TECHNOLOGIES LLC ("VSL"). THIS DOCUMENT AND THE INFORMATION CONTAINED HEREIN IS CONFIDENTIAL AND MAY NOT BE REPRODUCED OR DISCLOSED WITHOUT THE PRIOR WRITTEN CONSENT OF STRUCTURAL TECHNOLOGIES LLC ("VSL"). FURTHER, THE USE OF THIS DOCUMENT OR ANY INFORMATION PRESENTED HEREIN IS RESTRICTED TO THE SPECIFIC PROJECT AND PURPOSE FOR WHICH IT WAS PREPARED. ANY OTHER USE IS STRICTLY PROHIBITED. STRUCTURAL TECHNOLOGIES ("VSL") DISCLAIMS ANY LIABILITY FOR ANY UNAUTHORIZED, UNINTENDED, OR OTHER IMPERMISSIBLE USE OF THIS DOCUMENT OR ANY INFORMATION IT CONTAINS

Structural Technologies LLC (VSL) SHOP DRAWING
These shop drawings illustrate the details of the VSL Post-Tensioning System. They were prepared in conformance with the structural design provided to VSL by project owner or it's representative. VSL took no part in the preparation or review of said structural design and VSL DISCLAIMS ANY LIABILITY for it. The stamp or seal of a VSL employees on these shop drawings pertains only to the transfer of the forces required by the engineer of record on the structural drawings, and not to the adequacy of the structural design. NO WARRANTY, EXPRESSED OR IMPLIED, as to the adequacy of the structural design is made by virtue of any such stamp or seal.

NO.	DATE	ISSUED FOR	BY	CHK
1	05/19/17	PER EOR COMMENT DATED 05/01/17 APPROVAL	GP	SM
0	04/26/17	PER 90% DRAWINGS DATED FEB.2017 APPROVAL	GP	SM

structural TECHNOLOGIES A Structural Group Company
STRUCTURAL TECHNOLOGIES/VSL, LLC 2001 Blount Road Phone: 954/489-3991
Pompano Beach, FL office: Pompano Beach, FL 33069 Fax: 954/489-3992
Dallas, TX / Washington, DC / Denver, CO / Pompano Beach, FL / Atlanta, GA

TRUSS SYSTEM DETAILS

FIU PEDESTRIAN BRIDGE
MIAMI,FL
MUNILLA CONSTRUCTION MANAGEMENT, LLC (MCM)

SCALE: VARIES
JOB NO: 423729
SHEET: PT04

MCM

Review is for general conformance with the Contract Documents. Comments shall not be construed as relieving the supplier/subcontractor from strict compliance with such documents. The supplier/subcontractor remain responsible for details and accuracy, for complying with standards of the industry regarding fabrication, assembly, erection and installation procedures.

- [x] REVIEWED
- [ ] REVISE & RESUBMIT
- [ ] REVIEWED AS NOTED
- [ ] REJECTED

By: AR

Date: 05/22/17

RELEASED FOR CONSTRUCTION AS NOTED

Structures Design Office – District 6
Department of Transportation
STATE OF FLORIDA

Date: 6/27/17

Reviewed By: CEG

Review is for general conformance with Contract Documents. Sole responsibility for correctness of dimensions, details, quantities and safety during fabrication and erection shall remain with the Contractor.

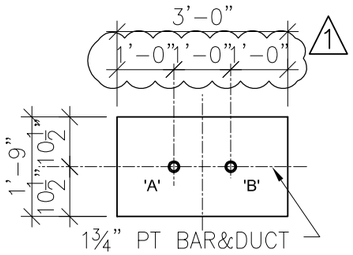

TRUSS 2 SECTION

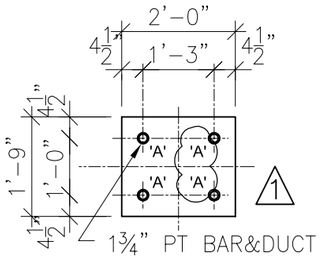

TRUSS 3&8 SECTION

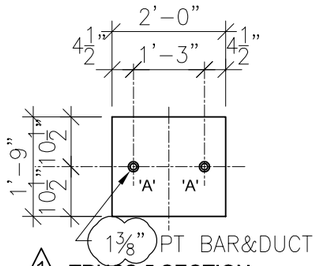

1 TRUSS 5 SECTION

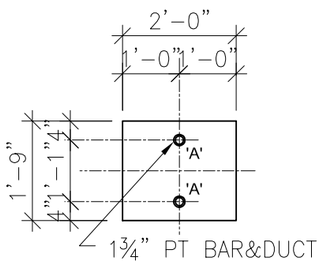

TRUSS 6 SECTION

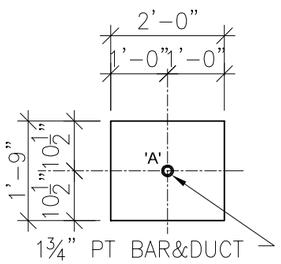

TRUSS 7 SECTION

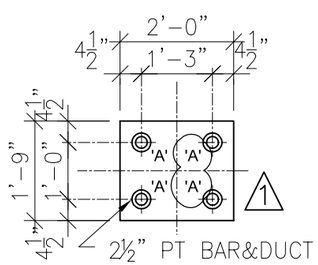

TRUSS 10 SECTION

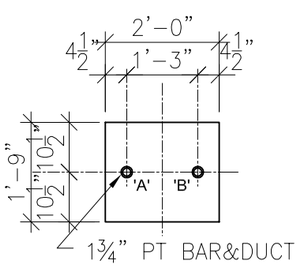

TRUSS 11 SECTION

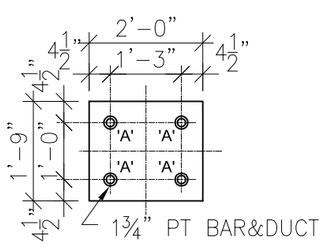

TRUSS 15 SECTION

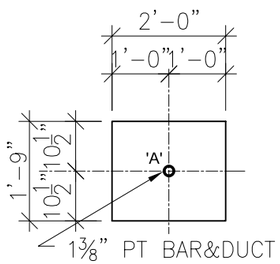

TRUSS 16, 18 & 20 SECTION

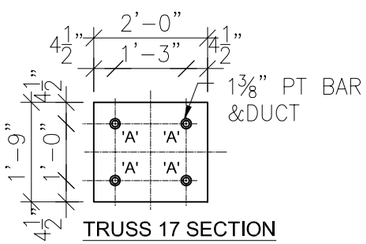

TRUSS 17 SECTION

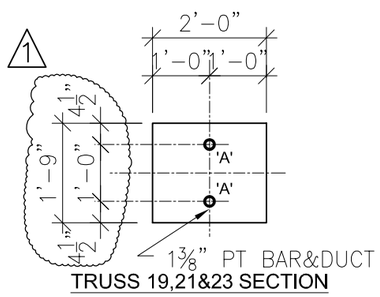

TRUSS 19,21&23 SECTION

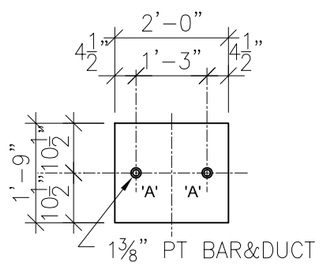

TRUSS 22 SECTION

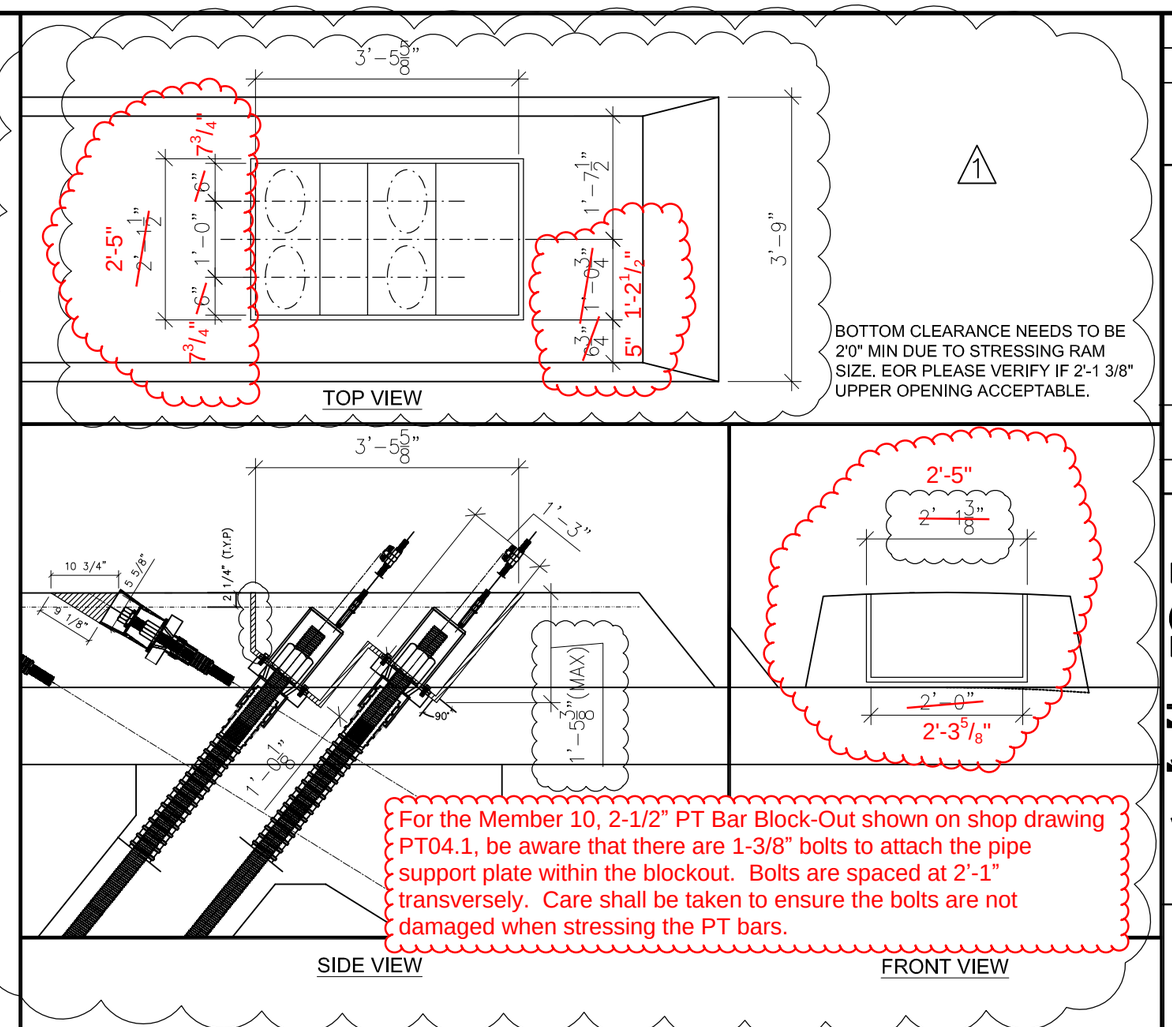

For the Member 10, 2-1/2" PT Bar Block-Out shown on shop drawing PT04.1, be aware that there are 1-3/8" bolts to attach the pipe support plate within the blockout. Bolts are spaced at 2'-1" transversely. Care shall be taken to ensure the bolts are not damaged when stressing the PT bars.

PT04.1- 2. MEMBER 10, 2-1/2" PT BAR BLOCK-OUT (BY OTHERS)

SHOP DRAWING REVIEW

_____ FOR INFORMATION ONLY
_____ ACCEPTED
__X__ ACCEPTED AS NOTED
_____ ACCEPTED AS NOTED & RESUBMIT
_____ NOT ACCEPTED

This review is only for general conformance with design intent of the project and general compliance with the information given in the contract documents. Review, corrections or comments made concerning the shop drawings during this review do not relieve the contractor from compliance with requirements of the drawings and specifications, nor relieve the contractor of contractual responsibility for any error or deviation from contract requirements. The contractor is responsible for confirming and correlating all quantities, dimensions and structural capabilities - Selecting fabrication processes and techniques of construction - Coordinating his work with that of all other trades - and performing his work in a safe and satisfactory manner.

FIGG Subconsultant:
Firm: _____
By: _____ Date: _____

FIGG BRIDGE ENGINEERS, Inc.
By: KLB Date: 5/25/2017

NOT FOR CONSTRUCTION

SHARATH MURTHY
LICENSE
No. 78039
STATE OF FLORIDA
PROFESSIONAL ENGINEER

THIS DOCUMENT, INCLUDING ANY DRAWINGS, SPECIFICATIONS, AND CALCULATIONS HEREIN, CONTAINS INFORMATION THAT IS PROPRIETARY TO STRUCTURAL TECHNOLOGIES LLC ("VSL"). THIS DOCUMENT AND THE INFORMATION CONTAINED HEREIN IS CONFIDENTIAL AND MAY NOT BE REPRODUCED OR DISCLOSED WITHOUT THE PRIOR WRITTEN CONSENT OF STRUCTURAL TECHNOLOGIES LLC ("VSL"). FURTHER, THE USE OF THIS DOCUMENT OR ANY INFORMATION PRESENTED HEREIN IS RESTRICTED TO THE SPECIFIC PROJECT AND PURPOSE FOR WHICH IT WAS PREPARED. ANY OTHER USE IS STRICTLY PROHIBITED. STRUCTURAL TECHNOLOGIES ("VSL") DISCLAIMS ANY LIABILITY FOR ANY UNAUTHORIZED, UNINTENDED, OR OTHER IMPERMISSIBLE USE OF THIS DOCUMENT OR ANY INFORMATION IT CONTAINS

Structural Technologies LLC (VSL) SHOP DRAWING

These shop drawings illustrate the details of the VSL Post–Tensioning System. They were prepared in conformance with the structural design provided to VSL by project owner or it's representative. VSL took no part in the preparation or review of said structural design and VSL DISCLAIMS ANY LIABILITY for it. The stamp or seal of a VSL employees on these shop drawings pertains only to the transfer of the forces required by the engineer of record on the structural drawings, and not to the adequacy of the structural design. NO WARRANTY, EXPRESSED OR IMPLIED, as to the adequacy of the structural design is made by virtue of any such stamp or seal.

NO.	DATE	DESCRIPTION	BY	CHK
1	05/16/17	PER EOR COMMENT DATED 05/01/17	GP	SM
0	04/26/17	PER SOR DRAWINGS DATED FEB.2017	GP	SM

ISSUED FOR APPROVAL

structural TECHNOLOGIES
A Structural Group Company
STRUCTURAL TECHNOLOGIES, LLC 2001 Blount Road Phone: 954/489–3991
Pompano Beach, FL 33069 Fax: 954/489–3992
Pompano Beach, FL Office:
Dallas, TX / Washington, DC / Denver, CO / Pompano Beach, FL / Atlanta, GA

TRUSS SYSTEM
PT BAR DETAILS

FIU PEDESTRIAN BRIDGE
MIAMI,FL
MUNILLA CONSTRUCTION MANAGEMENT, LLC (MCM)

SCALE: VARIES
JOB NO: 423729
SHEET: PT04.1

MCM

Review is for general conformance with the Contract Documents. Comments shall not be construed as relieving the supplier/subcontractor from strict compliance with such documents. The supplier/subcontractor remain responsible for details and accuracy, for complying with standards of the industry regarding fabrication, assembly, erection and installation procedures.

- [x] REVIEWED
- [ ] REVISE & RESUBMIT
- [ ] REVIEWED AS NOTED
- [ ] REJECTED

By: AR

Date: 05/22/17

RELEASED FOR CONSTRUCTION

Structures Design Office – District 6
Department of Transportation
STATE OF FLORIDA

Date: 06/26/17

Reviewed By: CEG

Review is for general conformance with Contract Documents. Sole responsibility for correctness of dimensions, details, quantities and safety during fabrication and erection shall remain with the Contractor.

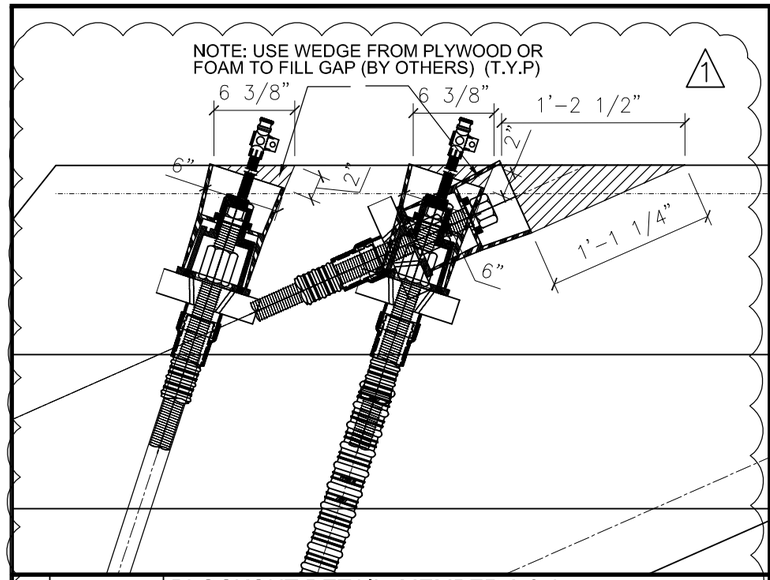

1 | 1"=1'-0" | BLOCKOUT DETAIL_MEMBER 2 & 3

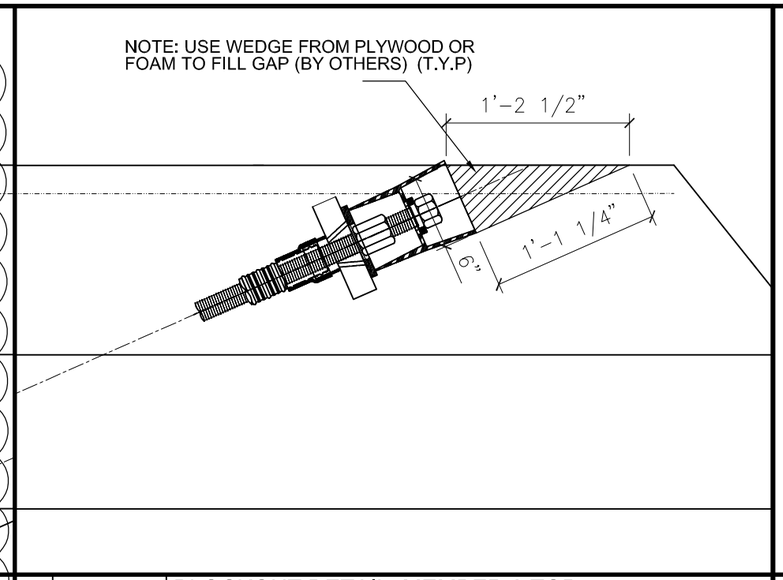

2 | 1"=1'-0" | BLOCKOUT DETAIL_MEMBER 2 TOP

SHOP DRAWING REVIEW

____ FOR INFORMATION ONLY
_X_ ACCEPTED
____ ACCEPTED AS NOTED
____ ACCEPTED AS NOTED & RESUBMIT
____ NOT ACCEPTED

This review is only for general conformance with design intent of the project and general compliance with the information given in the contract documents. Review, corrections or comments made concerning the shop drawings during this review do not relieve the contractor from compliance with requirements of the drawings and specifications, nor relieve the contractor of contractual responsibility for any error or deviation from contract requirements.
The contractor is responsible for confirming and correlating all quantities, dimensions and structural capabilities - Selecting fabrication processes and techniques of construction - Coordinating his work with that of all other trades - and performing his work in a safe and satisfactory manner.

FIGG Subconsultant:
Firm: _____
By: _____ Date: _____

FIGG BRIDGE ENGINEERS, Inc.
By: KLB Date: 5/25/2017

3 | 1"=1'-0" | NOT USED

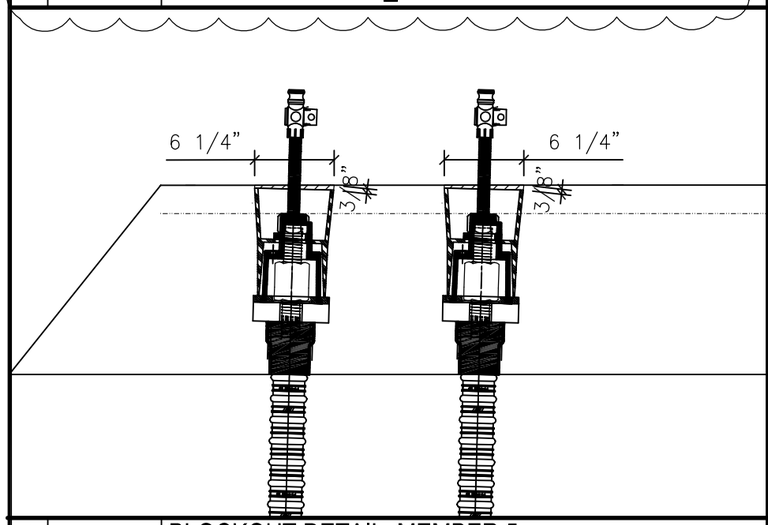

4 | 1"=1'-0" | BLOCKOUT DETAIL_MEMBER 5

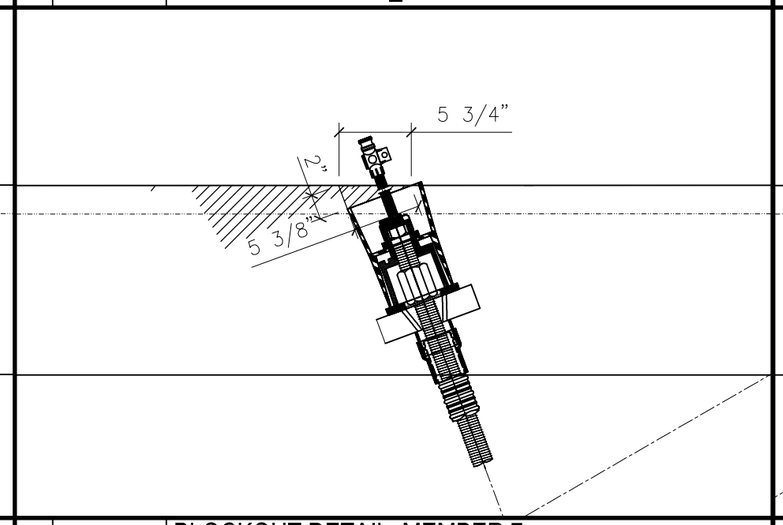

5 | 1"=1'-0" | BLOCKOUT DETAIL_MEMBER 7

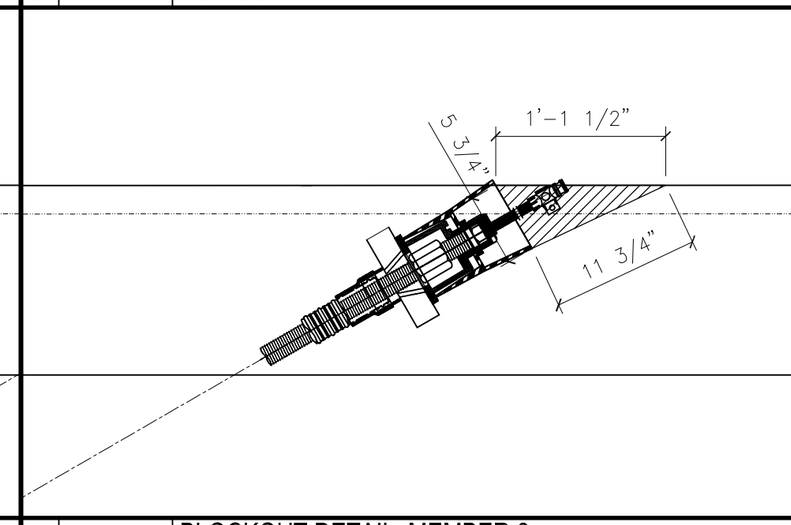

6 | 1"=1'-0" | BLOCKOUT DETAIL_MEMBER 6

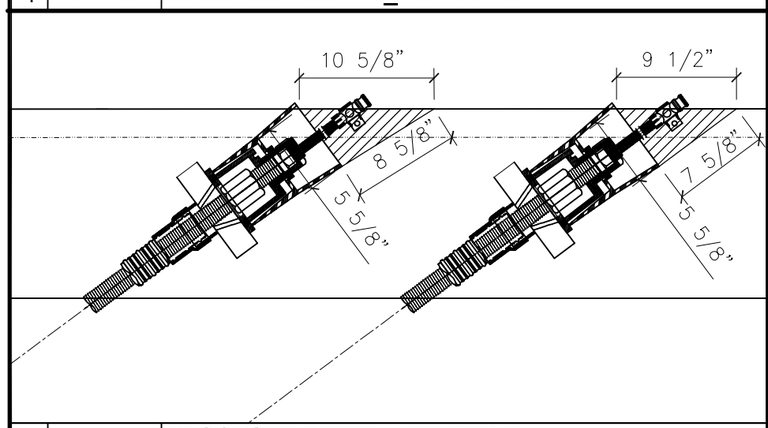

7 | 1"=1'-0" | BLOCKOUT DETAIL_MEMBER 8

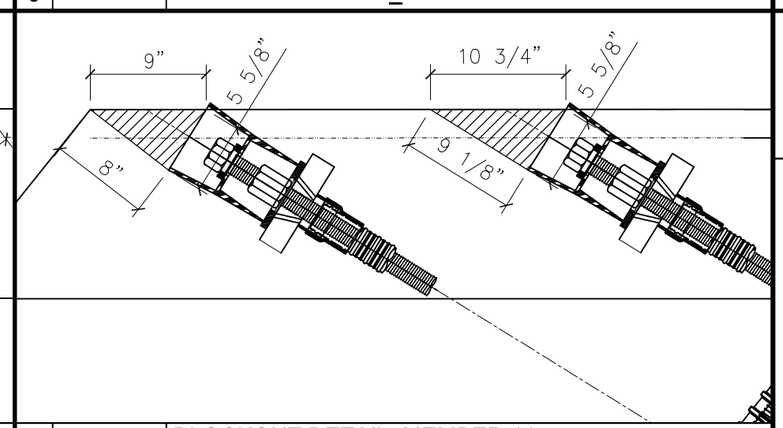

8 | 1"=1'-0" | BLOCKOUT DETAIL_MEMBER 11

NOT FOR CONSTRUCTION

SHARATH MURTHY
LICENSE
No. 79039
STATE OF
FLORIDA
PROFESSIONAL ENGINEER

THIS DOCUMENT, INCLUDING ANY DRAWINGS, SPECIFICATIONS, AND CALCULATIONS HEREIN, CONTAINS INFORMATION THAT IS PROPRIETARY TO STRUCTURAL TECHNOLOGIES LLC ("VSL"). THIS DOCUMENT AND THE INFORMATION CONTAINED HEREIN IS CONFIDENTIAL AND MAY NOT BE REPRODUCED OR DISCLOSED WITHOUT THE PRIOR WRITTEN CONSENT OF STRUCTURAL TECHNOLOGIES LLC ("VSL"). FURTHER, THE USE OF THIS DOCUMENT OR ANY INFORMATION PRESENTED HEREIN IS RESTRICTED TO THE SPECIFIC PROJECT AND PURPOSE FOR WHICH IT WAS PREPARED. ANY OTHER USE IS STRICTLY PROHIBITED. STRUCTURAL TECHNOLOGIES ("VSL") DISCLAIMS ANY LIABILITY FOR ANY UNAUTHORIZED, UNINTENDED, OR OTHER IMPERMISSIBLE USE OF THIS DOCUMENT OR ANY INFORMATION IT CONTAINS

Structural Technologies LLC (VSL) SHOP DRAWING
These shop drawings illustrate the details of the VSL Post-Tensioning System. They were prepared in conformance with the structural design provided to VSL by project owner or it's representative. VSL took no part in the preparation or review of said structural design and VSL DISCLAIMS ANY LIABILITY for it. The stamp or seal of a VSL employees on these shop drawings pertains only to the transfer of the forces required by the engineer of record on the structural drawings, and not to the adequacy of the structural design. NO WARRANTY, EXPRESSED OR IMPLIED, as to the adequacy of the structural design is made by virtue of any such stamp or seal.

NO.	DATE	DESCRIPTION	BY	CHK
1	05/19/17	PER EOR COMMENT DATED 05/01/17	GP	SM
0	04/26/17	PER SOR DRAWINGS DATED FEB.2017	GP	SM

ISSUED FOR: APPROVAL | APPROVAL

structural TECHNOLOGIES
A Structural Group Company
STRUCTURAL TECHNOLOGIES/VSL LLC
Pompano Beach, FL office: 2001 Blount Road Pompano Beach, FL 33069
Phone: 954/489-3991
Fax: 954/489-3992
Dallas, TX / Washington, DC / Denver, CO / Pompano Beach, FL / Atlanta, GA

PT BAR BLOCK-OUT DETAILS_MAIN SPAN

FIU PEDESTRIAN BRIDGE
MIAMI, FL
MUNILLA CONSTRUCTION MANAGEMENT, LLC (MCM)

SCALE: VARIES
JOB NO: 423729
SHEET: PT04.2

MCM

Review is for general conformance with the Contract Documents. Comments shall not be construed as relieving the supplier/subcontractor from strict compliance with such documents. The supplier/subcontractor remain responsible for details and accuracy, for complying with standards of the industry regarding fabrication, assembly, erection and installation procedures.

- [x] REVIEWED
- [ ] REVISE & RESUBMIT
- [ ] REVIEWED AS NOTED
- [ ] REJECTED

By: AR

Date: 05/22/17

RELEASED FOR CONSTRUCTION

Structures Design Office – District 6
Department of Transportation
STATE OF FLORIDA

Date: 06/26/17

Reviewed By: CEG

Review is for general conformance with Contract Documents. Sole responsibility for correctness of dimensions, details, quantities and safety during fabrication and erection shall remain with the Contractor.

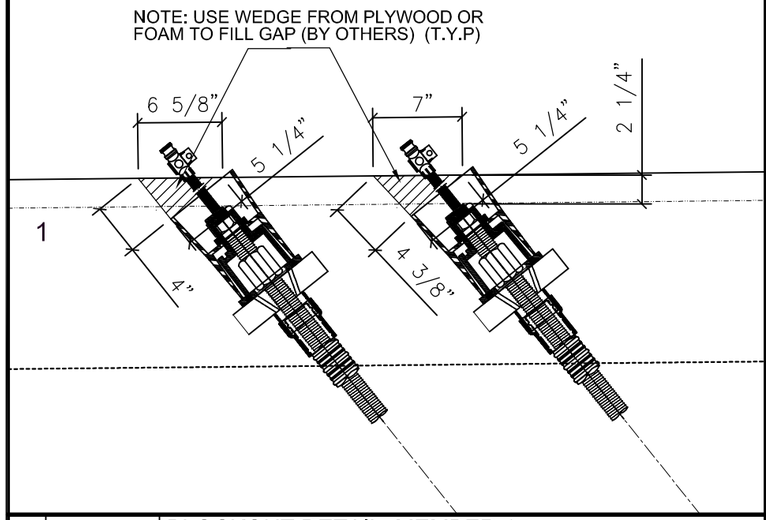

1 | 1"=1'-0" | BLOCKOUT DETAIL_MEMBER 15

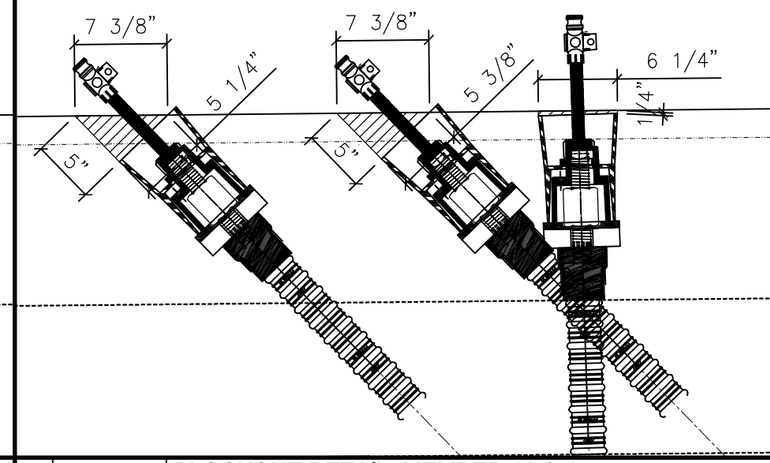

2 | 1"=1'-0" | BLOCKOUT DETAIL_MEMBER 16 & 17

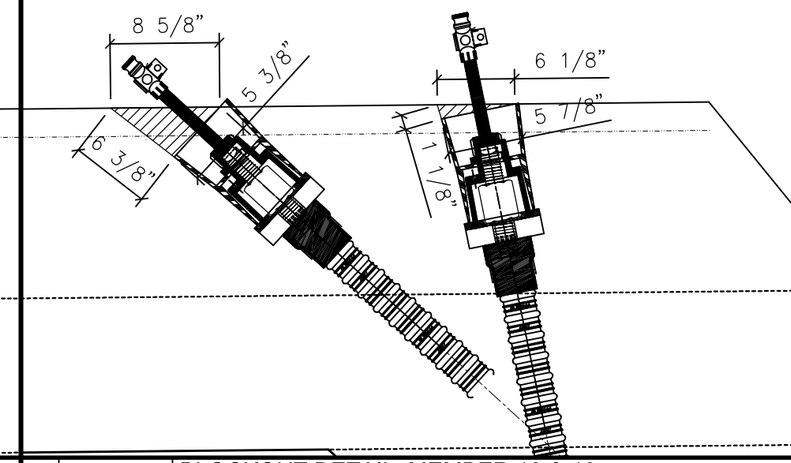

3 | 1"=1'-0" | BLOCKOUT DETAIL_MEMBER 18 & 19

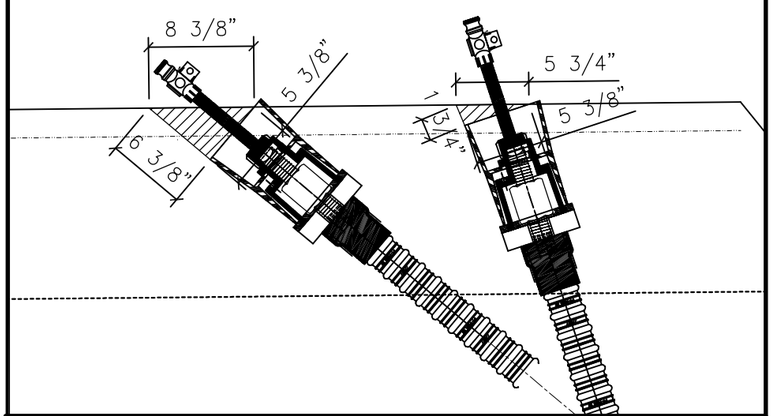

4 | 1"=1'-0" | BLOCKOUT DETAIL_MEMBER 20 & 21

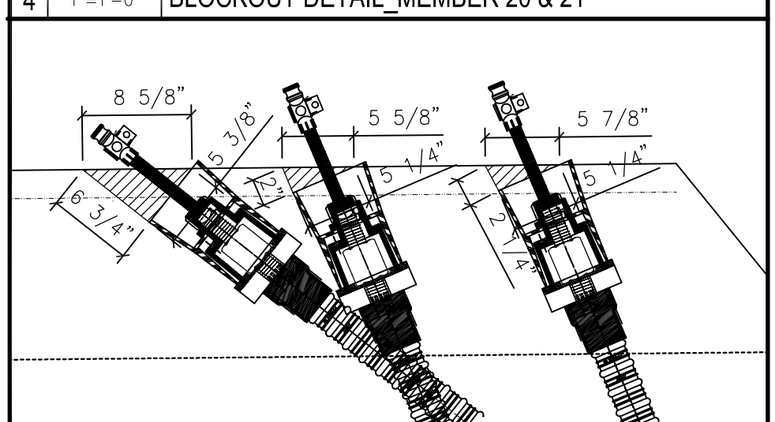

7 | 3/4"=1'-0" | BLOCKOUT DETAIL_MEMBER 22 & 23

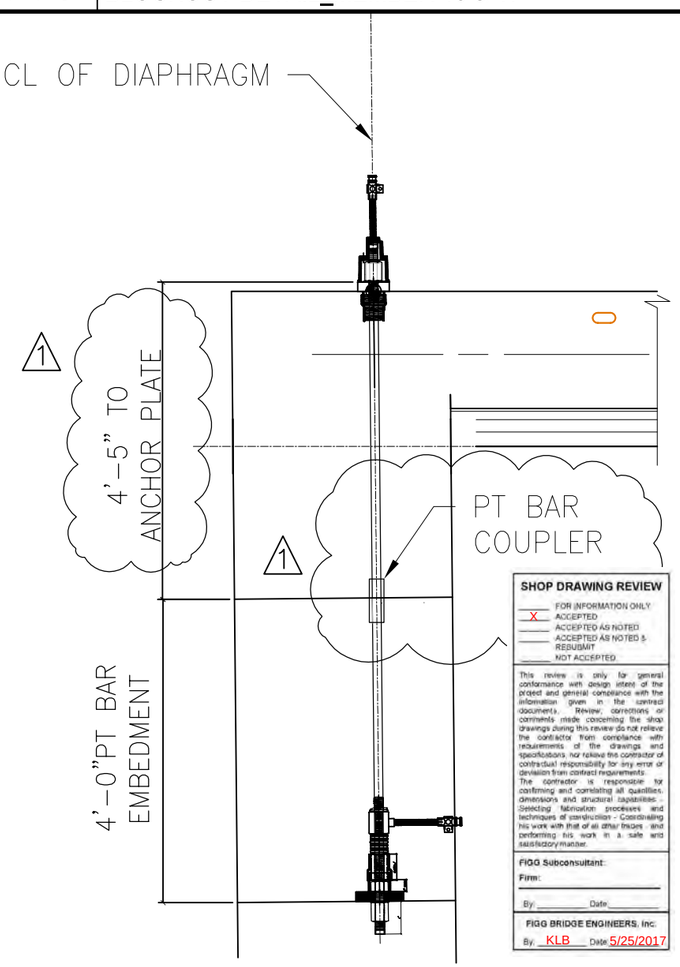

8 | 1/2"=1'-0" | VERTICAL PT BAR AT DIAPHRAGM

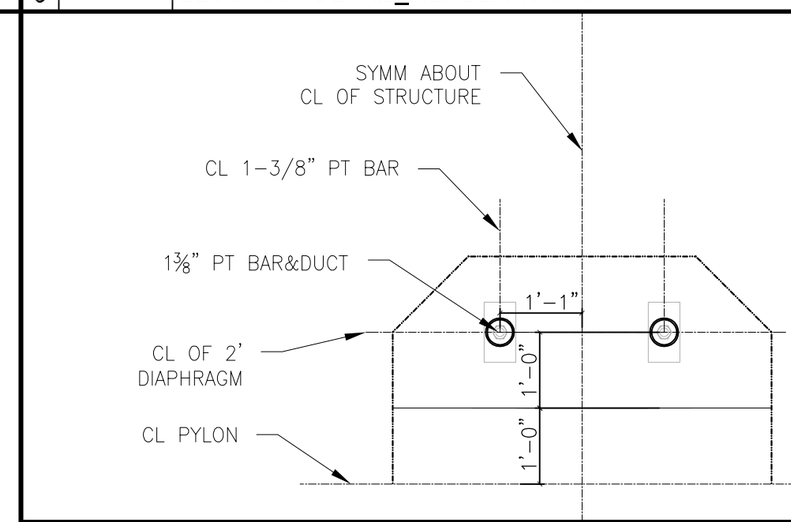

6 | 1/2"=1'-0" | VERTICAL PT BAR AT DIAPHRAGM_TOP VIEW

NOT FOR CONSTRUCTION

SHARATH MURTHY
LICENSE
No. 79039
STATE OF
FLORIDA
PROFESSIONAL ENGINEER

THIS DOCUMENT, INCLUDING ANY DRAWINGS, SPECIFICATIONS, AND CALCULATIONS HEREIN, CONTAINS INFORMATION THAT IS PROPRIETARY TO STRUCTURAL TECHNOLOGIES LLC ("VSL"). THIS DOCUMENT AND THE INFORMATION CONTAINED HEREIN IS CONFIDENTIAL AND MAY NOT BE REPRODUCED OR DISCLOSED WITHOUT THE PRIOR WRITTEN CONSENT OF STRUCTURAL TECHNOLOGIES LLC ("VSL"). FURTHER, THE USE OF THIS DOCUMENT OR ANY INFORMATION PRESENTED HEREIN IS RESTRICTED TO THE SPECIFIC PROJECT AND PURPOSE FOR WHICH IT WAS PREPARED. ANY OTHER USE IS STRICTLY PROHIBITED. STRUCTURAL TECHNOLOGIES ("VSL") DISCLAIMS ANY LIABILITY FOR ANY UNAUTHORIZED, UNINTENDED, OR OTHER IMPERMISSIBLE USE OF THIS DOCUMENT OR ANY INFORMATION IT CONTAINS

Structural Technologies LLC (VSL) SHOP DRAWING

These shop drawings illustrate the details of the VSL Post-Tensioning System. They were prepared in conformance with the structural design provided to VSL by project owner or it's representative. VSL took no part in the preparation or review of said structural design and VSL DISCLAIMS ANY LIABILITY for it. The stamp or seal of a VSL employees on these shop drawings pertains only to the transfer of the forces required by the engineer of record on the structural drawings, and not to the adequacy of the structural design. NO WARRANTY, EXPRESSED OR IMPLIED, as to the adequacy of the structural design is made by virtue of any such stamp or seal.

NO.	DATE	DESCRIPTION	BY	CHK
1	05/19/17	PER EOR COMMENT DATED 05/01/17	GP	SM
0	04/26/17	PER SOR DRAWINGS DATED FEB.2017	GP	SM
		APPROVAL	GP	SM
		APPROVAL	GP	SM
		ISSUED FOR	BY	CHK

structural TECHNOLOGIES
A Structural Group Company
STRUCTURAL TECHNOLOGIES, LLC 2001 Blount Road Phone: 954/489-3991
Pompano Beach, FL Office: Pompano Beach, FL 33069 Fax: 954/489-3992
Dallas, TX / Washington, DC / Denver, CO / Pompano Beach, FL / Atlanta, GA

PT BAR BLOCK-OUT DETAILS 2

FIU PEDESTRIAN BRIDGE
MIAMI, FL
MUNILLA CONSTRUCTION MANAGEMENT, LLC (MCM)

SCALE:	VARIES
JOB NO:	423729
SHEET:	PT04.3

MCM

Review is for general conformance with the Contract Documents. Comments shall not be construed as relieving the supplier/subcontractor from strict compliance with such documents. The supplier/subcontractor remain responsible for details and accuracy, for complying with standards of the industry regarding fabrication, assembly, erection and installation procedures.

- [x] REVIEWED
- [ ] REVISE & RESUBMIT
- [ ] REVIEWED AS NOTED
- [ ] REJECTED

By: AR

Date: 05/22/17

RELEASED FOR CONSTRUCTION

Structures Design Office – District 6
Department of Transportation
STATE OF FLORIDA

Date: 06/26/17

Reviewed By: CEG

Review is for general conformance with Contract Documents. Sole responsibility for correctness of dimensions, details, quantities and safety during fabrication and erection shall remain with the Contractor.

PT BAR BEARING PLATE DESIGN CALCULATIONS

CALCULATIONS WERE PERFORMED USING BEARING PLATE DIMENSIONS DIFFERENT THAN THOSE SHOWN IN PLANS. EOR TO VERIFY THAT THESE BEARING PLATE DIMENSIONS SATISFY THE DESIGN INTENT.

FIU PEDESTRIAN BRIDGE

SHOP DRAWING REVIEW

__X__ FOR INFORMATION ONLY
_____ ACCEPTED
_____ ACCEPTED AS NOTED
_____ ACCEPTED AS NOTED & RESUBMIT
_____ NOT ACCEPTED

This review is only for general conformance with design intent of the project and general compliance with the information given in the contract documents. Review, corrections or comments made concerning the shop drawings during this review do not relieve the contractor from compliance with requirements of the drawings and specifications, nor relieve the contractor of contractual responsibility for any error or deviation from contract requirements.
The contractor is responsible for confirming and correlating all quantities, dimensions and structural capabilities - Selecting fabrication processes and techniques of construction - Coordinating his work with that of all other trades - and performing his work in a safe and satisfactory manner.

FIGG Subconsultant:

Firm: _____

By: _____ Date: _____

FIGG BRIDGE ENGINEERS, Inc.

By: KLB Date: 5/25/2017

MIAMI, FL

RELEASED FOR CONSTRUCTION AS NOTED

Structures Design Office – District 6
Department of Transportation
STATE OF FLORIDA

Date: 6/27/17
Reviewed By: CEG

Review is for general conformance with Contract Documents. Sole responsibility for correctness of dimensions, details, quantities and safety during fabrication and erection shall remain with the Contractor.

04/27/2017

SHARATH MURTHY
LICENSE
No. 79039
STATE OF FLORIDA
PROFESSIONAL ENGINEER

4/28/17

JOB # 420582

STRUCTURAL TECHNOLIGIES, VSL

2001 BLOUNT RD,
POMPANO BEACH, FL 33309
954-489-3991 (P)
954-489-3992 (F)

VStructural LLc	SUBJECT :	Vertical PT Bar 1 3/8" dia. AASHTO LRFD 2004		
	PROJECT:	FIU Bridge	PAGE :	
	DESIGNED BY :	Guangfeng Peng	DATE :	4/27/2017

MATERIALS

CONCRETE 28th DAY STRENGTH	f'c =	8500	psi
CONCRETE STRENGTH AT STRESSING	f'ci =	6000	psi
POST-TENSIONING BAR	fpu =	150	ksi

ANCHORAGE DATA

SIZE OF P/T BAR		1.38	in
	Ap =	1.58	sq. in.
JACKING STRESS	f_{jack}=	170	kips
VSL ANCHOR		PT Bar	
SIDE OF BEARING PLATE	L1 =	6.000	in
SIDE OF BEARING PLATE	L2 =	6.000	in
DISTANCE TO LIMITING EDGE (BASED OFF SIDE L1)	EC=	7.500	in
DIA OF SPACE BEHIND BEARING PLATE	dS=	3.26	in
PT BAR NUT	dN=	2.50	in
PLATE WEIGHT		12.03	lbs

DESIGN PARAMETERS

LOAD FACTOR γ = 1.2

STRENGTH REDUCTION FACTOR
(Per AASHTO Standard Specifications Article 5.5.4.2)
ϕ = 0.80

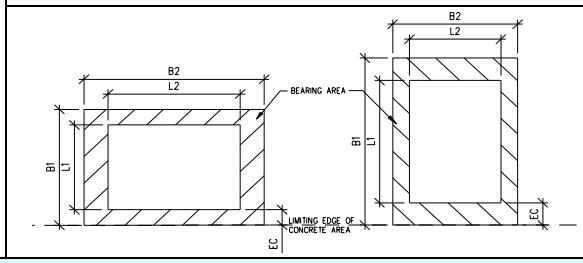

DESIGN FORCE

Factored Load, Pu

Pu = $\gamma * f_{jack}$ = 204.0 kips

BEARING PLATE

Gross bearing plate area	Ag =	36.0	sq. in.
Duct Opening	Ad =	8.3	sq. in.
Net bearing plate area	Ab =	27.7	sq. in.

SUPPORTING CONCRETE

Effective Short Dimension:

L1 = 6.00 in
B1 = 21.00 in

Effective Long Dimension:

L2 = 6.00 in
B2 = 21.00 in

A= B1* B2 = 441.0 sq. in.

BEARING STRENGTH (AASHTO 5.10.9.7.2-1)

$$\Pr = \phi f_n * A_b =$$

$$f_n = .7(f_c')\sqrt{\frac{A}{A_g}} < 2.25(f_c')$$

$$f_n = .7 * (6.0\text{ ksi})\sqrt{\frac{441.0\text{ sq. in}}{36.0\text{ sq. in}}} = 14.70\text{ ksi} > 13.5\text{ ksi}$$

$$f_n = 13.50\text{ ksi}$$

$$\Pr = \phi f_n * A_b =$$

$$\Pr = (0.80)*(14.70\text{ ksi})*(27.7\text{ sq. in.}) = 325.2\text{ kips}$$

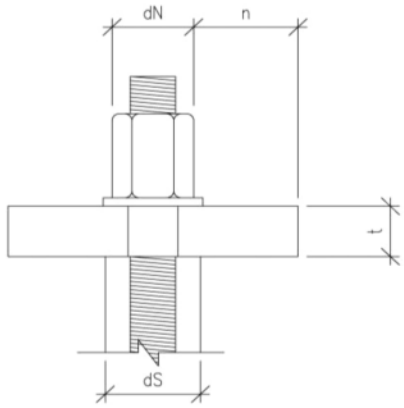

SLENDERNESS (AASHTO 5.10.9.7.2-4)

$$f_b = \frac{P_U}{A_b} = \frac{204.0\text{ kips}}{27.7\text{ sq. in.}} = 7.38\text{ ksi}$$

$$t \geq \frac{n}{.08 \cdot \sqrt[3]{\frac{E_b}{f_b}}}$$

$$t \geq \frac{1.75\text{ in}}{.08 \cdot \sqrt[3]{\frac{29000\text{ ksi}}{7.38\text{ ksi}}}}$$

$t \geq$ 1.39 in $\Longrightarrow$ **1.50 in** to nearest 1/4"

Ultimate Strength of Plate:

Pr = **325.20 k** > **204.00 k**

Okay!

VSL VStructural LLc	SUBJECT :	Vertical PT Bar 1 3/4" dia. AASHTO LRFD 2004		
	PROJECT:	FIU Bridge	PAGE :	
	DESIGNED BY :	Guangfeng Peng	DATE :	4/27/2017

MATERIALS

CONCRETE 28th DAY STRENGTH	f'c =	8500	psi
CONCRETE STRENGTH AT STRESSING	f'ci =	6000	psi
POST-TENSIONING BAR	fpu =	150	ksi

ANCHORAGE DATA

SIZE OF P/T BAR		1.75	in
	Ap =	2.60	sq. in.
JACKING STRESS	f_{jack}=	280	kips
VSL ANCHOR		PT Bar	
SIDE OF BEARING PLATE	L1 =	8.000	in
SIDE OF BEARING PLATE	L2 =	8.000	in
DISTANCE TO LIMITING EDGE (BASED OFF SIDE L1)	EC=	5.750	in
DIA OF SPACE BEHIND BEARING PLATE	dS=	3.50	in
PT BAR NUT	dN=	3.00	in
PLATE WEIGHT		31.54	lbs

DESIGN PARAMETERS

LOAD FACTOR γ = 1.2

STRENGTH REDUCTION FACTOR
(Per AASHTO Standard Specifications Article 5.5.4.2)
ϕ = 0.80

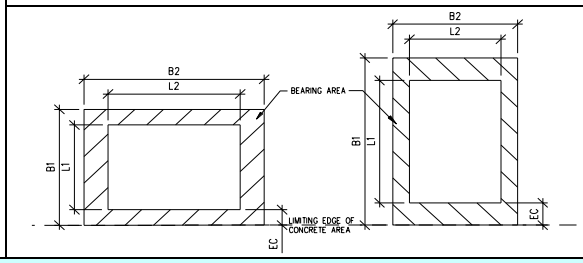

DESIGN FORCE

Factored Load, Pu

Pu = $\gamma * f_{jack}$ = 336.0 kips

BEARING PLATE

Gross bearing plate area	Ag =	64.0	sq. in.
Duct Opening	Ad =	9.6	sq. in.
Net bearing plate area	Ab =	54.4	sq. in.

SUPPORTING CONCRETE

Effective Short Dimension:

L1 = 8.00 in
B1 = 19.50 in

Effective Long Dimension:

L2 = 8.00 in
B2 = 19.50 in

A= B1* B2 = 380.3 sq. in.

BEARING STRENGTH (AASHTO 5.10.9.7.2-1)

$$\Pr = \phi f_n * A_b =$$

$$f_n = .7(f_c')\sqrt{\frac{A}{A_g}} < 2.25(f_c')$$

$$f_n = .7 * (6.0\text{ ksi})\sqrt{\frac{380.3\text{ sq. in}}{64.0\text{ sq. in}}} = 10.24\text{ ksi} < 13.5\text{ ksi}$$

$$f_n = 10.24\text{ ksi}$$

$$\Pr = \phi f_n * A_b =$$

$$\Pr = (0.80)*(10.24\text{ ksi})*(54.4\text{ sq. in.}) = 445.4\text{ kips}$$

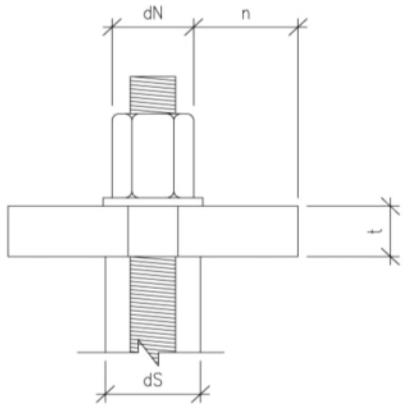

SLENDERNESS (AASHTO 5.10.9.7.2-4)

$$f_b = \frac{P_U}{A_b} = \frac{336.0\text{ kips}}{54.4\text{ sq. in.}} = 6.18\text{ ksi}$$

$$t \geq \frac{n}{.08 \cdot \sqrt[3]{\frac{E_b}{f_b}}}$$

$$t \geq \frac{2.50\text{ in}}{.08 \cdot \sqrt[3]{\frac{29000\text{ ksi}}{6.18\text{ ksi}}}}$$

$t \geq$ 1.87 in $\Longrightarrow$ **2.00 in** to nearest 1/4"

Ultimate Strength of Plate:

Pr = **445.36 k** > **336.00 k**

Okay!

VStructural LLc	SUBJECT :	Vertical PT Bar 2-1/2" dia. AASHTO LRFD 2004		
	PROJECT:	FIU Bridge	PAGE :	
	DESIGNED BY :	Guangfeng Peng	DATE :	4/27/2017

MATERIALS

CONCRETE 28th DAY STRENGTH	f'c =	8500	psi
CONCRETE STRENGTH AT STRESSING	f'ci =	6000	psi
POST-TENSIONING BAR	fpu =	150	ksi

ANCHORAGE DATA

SIZE OF P/T BAR		2.50	in
	Ap =	5.19	sq. in.
JACKING STRESS	f_{jack}=	389	kips
VSL ANCHOR		PT Bar	
SIDE OF BEARING PLATE	L1 =	10.000	in
SIDE OF BEARING PLATE	L2 =	10.000	in
DISTANCE TO LIMITING EDGE (BASED OFF SIDE L1)	EC=	4.500	in
DIA OF SPACE BEHIND BEARING PLATE	dS=	5.00	in
PT BAR NUT	dN=	4.38	in
PLATE WEIGHT		52.44	lbs

DESIGN PARAMETERS

LOAD FACTOR γ = 1.2

STRENGTH REDUCTION FACTOR
(Per AASHTO Standard Specifications Article 5.5.4.2)
ϕ = 0.80

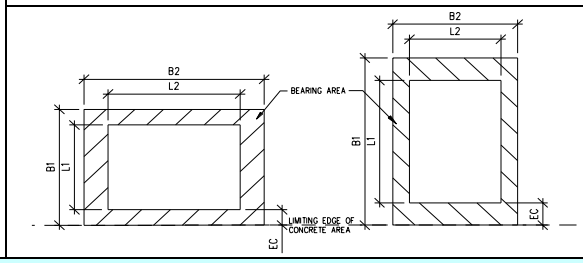

DESIGN FORCE

Factored Load, Pu

Pu = $\gamma * f_{jack}$ = 466.8 kips

BEARING PLATE

Gross bearing plate area	Ag =	100.0	sq. in.
Duct Opening	Ad =	19.6	sq. in.
Net bearing plate area	Ab =	80.4	sq. in.

SUPPORTING CONCRETE

Effective Short Dimension:
L1 = 10.00 in
B1 = 19.00 in

Effective Long Dimension:
L2 = 10.00 in
B2 = 19.00 in

A= B1* B2 = 361.0 sq. in.

BEARING STRENGTH (AASHTO 5.10.9.7.2-1)

$$\Pr = \phi f_n * A_b =$$

$$f_n = .7(f_c')\sqrt{\frac{A}{A_g}} < 2.25(f_c')$$

$$f_n = .7 * (6.0\text{ ksi})\sqrt{\frac{361.0\text{ sq. in}}{100.0\text{ sq. in}}} = 7.98\text{ ksi} < 13.5\text{ ksi}$$

$$f_n = 7.98\text{ ksi}$$

$$\Pr = \phi f_n * A_b =$$

$$\Pr = (0.80)*(7.98\text{ ksi})*(80.4\text{ sq. in.}) = 513.1\text{ kips}$$

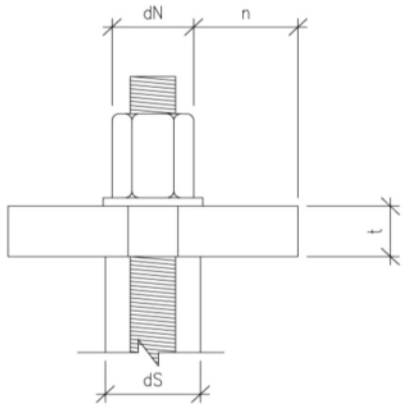

SLENDERNESS (AASHTO 5.10.9.7.2-4)

$$f_b = \frac{P_U}{A_b} = \frac{466.8\text{ kips}}{80.4\text{ sq. in.}} = 5.81\text{ ksi}$$

$$t \geq \frac{n}{.08 \cdot \sqrt[3]{\frac{E_b}{f_b}}}$$

$$t \geq \frac{2.81\text{ in}}{.08 \cdot \sqrt[3]{\frac{29000\text{ ksi}}{5.81\text{ ksi}}}}$$

$t \geq$ 2.06 in $\Longrightarrow$ **2.25 in** to nearest 1/4"

Ultimate Strength of Plate:

Pr = **513.05 k** > **466.80 k**

Okay!

REPRESENTATIVE FRICTION LOSS AND ELONGATION CALCULATIONS

POST-TENSIONING TENDONS
DECK

SHOP DRAWING REVIEW

__X__ FOR INFORMATION ONLY
_____ ACCEPTED
_____ ACCEPTED AS NOTED
_____ ACCEPTED AS NOTED & RESUBMIT
_____ NOT ACCEPTED

This review is only for general conformance with design intent of the project and general compliance with the information given in the contract documents. Review, corrections or comments made concerning the shop drawings during this review do not relieve the contractor from compliance with requirements of the drawings and specifications, nor relieve the contractor of contractual responsibility for any error or deviation from contract requirements.
The contractor is responsible for confirming and correlating all quantities, dimensions and structural capabilities - Selecting fabrication processes and techniques of construction - Coordinating his work with that of all other trades - and performing his work in a safe and satisfactory manner.

FIGG Subconsultant:

Firm:

By: _____ Date:_____

FIGG BRIDGE ENGINEERS, Inc.

By: KLB Date: 5/25/2017

FIU Pedestrian Bridge

Miami, FL

SHARATH MURTHY
LICENSE
No. 79039
STATE OF
FLORIDA
PROFESSIONAL ENGINEER
4/28/17

03/20/2017

JOB# 420582

Performed By:
Structural Technologies, LLC
2001 Blount Rd
Pompano Beach, FL 33069
954-489-3991 (P)
954-489-3992 (F)

NOTE:

The calculations contained herein are used to determine the number of tendons required in a given area and to determine the approximate long-term losses. The actual elongations shown on the VSL Shop Drawings are calculated through a program linked with AutoCAD that allows us to incorporate the output directly into our drawings.

```
-----------------------------------------------------------------------------
|                            ADAPT Corporation                              |
|                       1733 Woodside Rd., Suite 220                        |
|                       Redwood City, CA, 94061, USA                        |
-----------------------------------------------------------------------------
|                  ADAPT Corporation, Redwood City, CA, USA                 |
|               ADAPT International Pvt. Ltd., Kolkata, India               |
|                    ADAPT Latin America, Miami, FL, USA                    |
|                  support@adaptsoft.com, www.adaptsoft.com                 |
-----------------------------------------------------------------------------
|                        ADAPT-FELT  Standard  2011                         |
|           ADAPT POST-TENSIONING STRESS LOSS & ELONGATION PROGRAM           |
 This program calculates the long-term and immediate stress losses in a post-
 tensioned tendon. It outputs the elongations at the stressing ends and the
 final stress profile along the tendon.
-----------------------------------------------------------------------------
DATE: Mar 20, 2017                                          TIME: 11:40:04


P R O J E C T   T I T L E :
420582 FIU Pedestrian Bridge


S P E C I F I C   T I T L E :
Main Span D1


L O N G - T E R M   L O S S   C A L C U L A T I O N S :

INPUT PARAMETERS :
Post-tensioning system ................................ BONDED
Type of strand ........................................ LOW LAX
Ultimate strength of strand ............................     270.00  ksi
Modulus of elasticity of strand ........................   28500.00  ksi
Initial stress in strand (at release)...................     179.00  ksi

Concrete strength at 28 days ...........................    8500.00  psi
Average weight of concrete ............................. NORMAL
Estimated age of concrete at stressing .................       5     days
Modulus of elasticity of concrete at stressing .........    2221.00  ksi
Modulus of elasticity of concrete at 28 days ...........    5255.00  ksi
Estimate of average relative humidity ..................      80.    %
Volume to surface ratio of member ......................       9.00  in

Initial stress in concrete due to prestressing *........     870.00  psi
Initial stress in concrete due to selfweight   *........      18.00  psi
Concrete stress due to superimposed sustained loading *.      50.00  psi
* Concrete stresses refer to height at tendon centroid
  Compressive stresses shown positive


CALCULATED VALUES :
Elastic shortening .....................................     5.697   ksi
Shrinkage ..............................................     1.828   ksi
```

```
--------------------------------------------------------------------------------


Creep ..................................................     8.139   ksi
Relaxation .............................................     2.668   ksi
-----------------------------------------------------------------------
Total long-term stress losses .........................    18.332   ksi



F R I C T I O N   &   E L O N G A T I O N   C A L C U L A T I O N S :

INPUT PARAMETERS :
Coefficient of angular friction (meu)................      0.14000 /radian
Coefficient of wobble friction (K)...................      0.00020 rad/ft
Ultimate strength of strand .........  ..............    270.00    ksi
Ratio of jacking stress to strand's ultimate strength      0.75
Anchor set ..........................................      0.38    inch
Cross-sectional area of strand ......................      0.217   inch^2
Total Number of Strands per Tendon...................     12
STRESSING ...........................................      AT LEFT END


LEGEND :
P ....... = Tendon profile type defined as: 1=reversed parabola;
            2=partial/regular parabola; 3=harped; 4=general; 5=straight;
            6=extended reversed parabola; 7=cantilever down
X1/L etc  = horizontal distances to control points in geometry of the
            tendon divided by span length
Stresses tabulated are after anchor set but before long-term losses.


TENDON ID,  GEOMETRY AND STRESS PROFILE  (Main Span D1)

     LENGTH    < TENDON HEIGHT in.>  Horizontal ratios   <-  STRESS (ksi)  -->
SPAN  ft    P  start  center  right   X1/L X2/L X3/L     start   center  right
-1----2-----3----4------5------6-------7----8----9--------10------11------12-

 1  172.00  1    7.13  10.38   7.13   0.00 0.50 0.00     189.96  193.73 195.16
--------------------------------------
    172.00 ft (total length of tendon)


SUMMARY :
Average initial stress (after release)...................      193.56  ksi
Long term stress losses .................................       18.33  ksi
Final average stress ....................................      175.23  ksi
Final average force in tendon ...........................      456.29  k

Anchor set influence from left pull  (196.23ksi;0.727) ..      146.06  ft
Elongation at left pull before anchor set ...............      14.393  inch
Elongation at left pull after anchor set ................      14.018  inch


Page # 3                     Main Span D1                    ADAPT-FELT 2011
--------------------------------------------------------------------------------
```

Total elongation after anchor set ..... 14.018 inch
Ratio of total elongation to
tendon length after anchor set ..... 0.081 inch/ft
Jacking force ..... 527.31 k

CRITICAL STRESS RATIOS :
At stressing 0.75; At anchorage 0.72; Max along tendon 0.73

DETAIL OF STRESSES AT 1/20TH POINTS ALONG EACH SPAN
==========
Units are in ksi

X/L	Span 1
0.00	189.96
0.05	190.47
0.10	190.84
0.15	191.20
0.20	191.57
0.25	191.93
0.30	192.29
0.35	192.65
0.40	193.01
0.45	193.37
0.50	193.73
0.55	194.09
0.60	194.45
0.65	194.81
0.70	195.17
0.75	195.52
0.80	195.88
0.85	196.22
0.90	195.87
0.95	195.51
1.00	195.16

TENDON HEIGHT AT 1/20TH POINTS ALONG EACH SPAN
==========
Units are in inch

X/L	Span 1
0.00	7.13
0.05	7.75
0.10	8.30
0.15	8.79

0.20	9.21

0.25	9.57
0.30	9.86
0.35	10.09
0.40	10.25
0.45	10.35
0.50	10.38
0.55	10.35
0.60	10.25
0.65	10.09
0.70	9.86
0.75	9.57
0.80	9.21
0.85	8.79
0.90	8.30
0.95	7.75
1.00	7.13

ADAPT Structural Concrete Software

support@adaptsoft.com, www.adaptsoft.com
ADAPT-FELT Ver. 2011
Date: 3/20/2017 Time: 11:40

1- PROJECT TITLE : 420582 FIU Pedestrian Bridge

1.1 SPECIFIC TITLE : Main Span D1
1.2 FILE NAME : Main Span D1

2 - TENDON STRESSES [ksi]

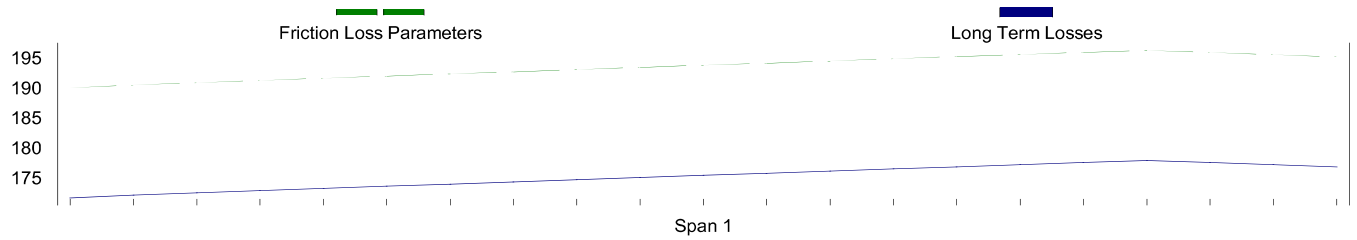

3 - TENDON PROFILE [in]

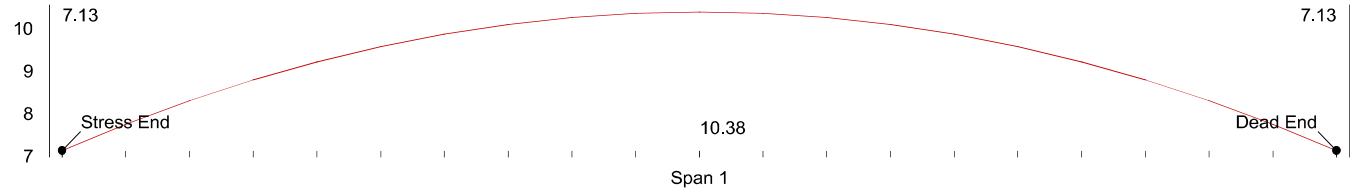

4 - SUMMARY

```
Average initial stress (after release)..................      193.56  ksi
Long term stress losses ................................       18.33  ksi
Final average stress ...................................      175.23  ksi
Final average force in tendon ..........................      456.29  k

Anchor set influence from left pull  (196.23ksi;0.727) ..      146.06  ft
Elongation at left pull before anchor set ..............      14.393  inch
Elongation at left pull after anchor set ...............      14.018  inch

Total elongation after anchor set ......................      14.018  inch
Ratio of total elongation to
      tendon length after anchor set ...................       0.081  inch/ft
Jacking force ..........................................      527.31  k


CRITICAL STRESS RATIOS :
At stressing 0.75; At anchorage 0.72; Max along tendon 0.73
```

5 - DESIGNER'S NOTES

```
-----------------------------------------------------------------------------
|                            ADAPT Corporation                              |
|                       1733 Woodside Rd., Suite 220                        |
|                       Redwood City, CA, 94061, USA                        |
-----------------------------------------------------------------------------
|                  ADAPT Corporation, Redwood City, CA, USA                 |
|               ADAPT International Pvt. Ltd., Kolkata, India               |
|                    ADAPT Latin America, Miami, FL, USA                    |
|                  support@adaptsoft.com, www.adaptsoft.com                 |
-----------------------------------------------------------------------------
|                        ADAPT-FELT  Standard  2011                         |
|           ADAPT POST-TENSIONING STRESS LOSS & ELONGATION PROGRAM           |
 This program calculates the long-term and immediate stress losses in a post-
 tensioned tendon. It outputs the elongations at the stressing ends and the
 final stress profile along the tendon.
-----------------------------------------------------------------------------
DATE: Mar 20, 2017                                          TIME: 11:46:22


P R O J E C T   T I T L E :
420582 FIU Pedestrian Bridge


S P E C I F I C   T I T L E :
Main Span D2_D6


L O N G - T E R M   L O S S   C A L C U L A T I O N S :

INPUT PARAMETERS :
Post-tensioning system ................................ BONDED
Type of strand ........................................ LOW LAX
Ultimate strength of strand ............................     270.00  ksi
Modulus of elasticity of strand ........................   28500.00  ksi
Initial stress in strand (at release)...................     179.00  ksi

Concrete strength at 28 days ...........................    8500.00  psi
Average weight of concrete ............................. NORMAL
Estimated age of concrete at stressing .................       5     days
Modulus of elasticity of concrete at stressing .........    2221.00  ksi
Modulus of elasticity of concrete at 28 days ...........    5255.00  ksi
Estimate of average relative humidity ..................      80.    %
Volume to surface ratio of member ......................       9.00  in

Initial stress in concrete due to prestressing *........     870.00  psi
Initial stress in concrete due to selfweight   *........      18.00  psi
Concrete stress due to superimposed sustained loading *.      50.00  psi
* Concrete stresses refer to height at tendon centroid
  Compressive stresses shown positive


CALCULATED VALUES :
Elastic shortening .....................................     5.697   ksi
Shrinkage ..............................................     1.828   ksi
```

```
--------------------------------------------------------------------------------


Creep ..................................................     8.139   ksi
Relaxation .............................................     2.668   ksi
-----------------------------------------------------------------------
Total long-term stress losses .........................    18.332   ksi



F R I C T I O N   &   E L O N G A T I O N   C A L C U L A T I O N S :

INPUT PARAMETERS :
Coefficient of angular friction (meu)................      0.14000 /radian
Coefficient of wobble friction (K)...................      0.00020 rad/ft
Ultimate strength of strand .........  ..............    270.00    ksi
Ratio of jacking stress to strand's ultimate strength      0.75
Anchor set ..........................................      0.38    inch
Cross-sectional area of strand ......................      0.217   inch^2
Total Number of Strands per Tendon...................     19
STRESSING ...........................................      AT LEFT END


LEGEND :
P ....... = Tendon profile type defined as: 1=reversed parabola;
            2=partial/regular parabola; 3=harped; 4=general; 5=straight;
            6=extended reversed parabola; 7=cantilever down
X1/L etc  = horizontal distances to control points in geometry of the
            tendon divided by span length
Stresses tabulated are after anchor set but before long-term losses.


TENDON ID,  GEOMETRY AND STRESS PROFILE  (Main Span D2_D6)

     LENGTH    < TENDON HEIGHT in.>  Horizontal ratios   <-  STRESS (ksi)  -->
SPAN  ft    P  start  center  right   X1/L X2/L X3/L     start   center  right
-1----2-----3----4------5------6-------7----8----9--------10------11------12-

 1  172.00  1    7.13  10.38   7.13   0.00 0.50 0.00     189.96  193.73 195.16
--------------------------------------
    172.00 ft (total length of tendon)


SUMMARY :
Average initial stress (after release)...................      193.56  ksi
Long term stress losses .................................       18.33  ksi
Final average stress ....................................      175.23  ksi
Final average force in tendon ...........................      722.46  k

Anchor set influence from left pull  (196.23ksi;0.727) ..      146.06  ft
Elongation at left pull before anchor set ...............      14.393  inch
Elongation at left pull after anchor set ................      14.018  inch


Page # 3                    Main Span D2_D6                  ADAPT-FELT 2011
--------------------------------------------------------------------------------
```

Total elongation after anchor set ..... 14.018 inch
Ratio of total elongation to
tendon length after anchor set ..... 0.081 inch/ft
Jacking force ..... 834.91 k

CRITICAL STRESS RATIOS :
At stressing 0.75; At anchorage 0.72; Max along tendon 0.73

DETAIL OF STRESSES AT 1/20TH POINTS ALONG EACH SPAN
==========
Units are in ksi

X/L	Span 1
0.00	189.96
0.05	190.47
0.10	190.84
0.15	191.20
0.20	191.57
0.25	191.93
0.30	192.29
0.35	192.65
0.40	193.01
0.45	193.37
0.50	193.73
0.55	194.09
0.60	194.45
0.65	194.81
0.70	195.17
0.75	195.52
0.80	195.88
0.85	196.22
0.90	195.87
0.95	195.51
1.00	195.16

TENDON HEIGHT AT 1/20TH POINTS ALONG EACH SPAN
==========
Units are in inch

X/L	Span 1
0.00	7.13
0.05	7.75
0.10	8.30
0.15	8.79

0.20	9.21

0.25	9.57
0.30	9.86
0.35	10.09
0.40	10.25
0.45	10.35
0.50	10.38
0.55	10.35
0.60	10.25
0.65	10.09
0.70	9.86
0.75	9.57
0.80	9.21
0.85	8.79
0.90	8.30
0.95	7.75
1.00	7.13

ADAPT Structural Concrete Software

support@adaptsoft.com, www.adaptsoft.com
ADAPT-FELT Ver. 2011
Date: 3/20/2017 Time: 11:46

1- PROJECT TITLE : 420582 FIU Pedestrian Bridge

1.1 SPECIFIC TITLE : Main Span D2_D6
1.2 FILE NAME : Main Span D2_D6

2 - TENDON STRESSES [ksi]

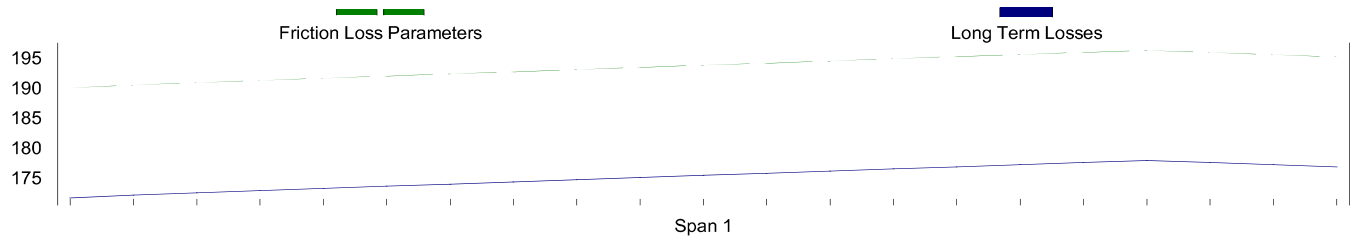

3 - TENDON PROFILE [in]

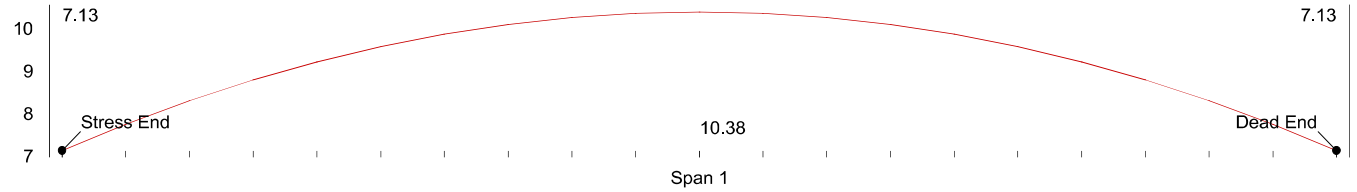

4 - SUMMARY

```
Average initial stress (after release)..................      193.56  ksi
Long term stress losses ................................       18.33  ksi
Final average stress ...................................      175.23  ksi
Final average force in tendon ..........................      722.46  k

Anchor set influence from left pull  (196.23ksi;0.727) ..      146.06  ft
Elongation at left pull before anchor set ..............      14.393  inch
Elongation at left pull after anchor set ...............      14.018  inch

Total elongation after anchor set ......................      14.018  inch
Ratio of total elongation to
      tendon length after anchor set ...................       0.081  inch/ft
Jacking force ..........................................      834.91  k


CRITICAL STRESS RATIOS :
At stressing 0.75; At anchorage 0.72; Max along tendon 0.73
```

5 - DESIGNER'S NOTES

```
-----------------------------------------------------------------------------
|                            ADAPT Corporation                              |
|                       1733 Woodside Rd., Suite 220                        |
|                       Redwood City, CA, 94061, USA                        |
-----------------------------------------------------------------------------
|                  ADAPT Corporation, Redwood City, CA, USA                 |
|               ADAPT International Pvt. Ltd., Kolkata, India               |
|                    ADAPT Latin America, Miami, FL, USA                    |
|                  support@adaptsoft.com, www.adaptsoft.com                 |
-----------------------------------------------------------------------------
|                        ADAPT-FELT  Standard  2011                         |
|           ADAPT POST-TENSIONING STRESS LOSS & ELONGATION PROGRAM           |
 This program calculates the long-term and immediate stress losses in a post-
 tensioned tendon. It outputs the elongations at the stressing ends and the
 final stress profile along the tendon.
-----------------------------------------------------------------------------
DATE: Mar 20, 2017                                          TIME: 11:52:20


P R O J E C T   T I T L E :
420582 FIU Pedestrian Bridge


S P E C I F I C   T I T L E :
Back Span D7_D9


L O N G - T E R M   L O S S   C A L C U L A T I O N S :

INPUT PARAMETERS :
Post-tensioning system ................................ BONDED
Type of strand ........................................ LOW LAX
Ultimate strength of strand ............................     270.00  ksi
Modulus of elasticity of strand ........................   28500.00  ksi
Initial stress in strand (at release)...................     179.00  ksi

Concrete strength at 28 days ...........................    8500.00  psi
Average weight of concrete ............................. NORMAL
Estimated age of concrete at stressing .................       5     days
Modulus of elasticity of concrete at stressing .........    2221.00  ksi
Modulus of elasticity of concrete at 28 days ...........    5255.00  ksi
Estimate of average relative humidity ..................      80.    %
Volume to surface ratio of member ......................       9.00  in

Initial stress in concrete due to prestressing *........     870.00  psi
Initial stress in concrete due to selfweight   *........      18.00  psi
Concrete stress due to superimposed sustained loading *.      50.00  psi
* Concrete stresses refer to height at tendon centroid
  Compressive stresses shown positive


CALCULATED VALUES :
Elastic shortening .....................................     5.697   ksi
Shrinkage ..............................................     1.828   ksi
```

```
--------------------------------------------------------------------------------


Creep ..................................................     8.139   ksi
Relaxation .............................................     2.668   ksi
-----------------------------------------------------------------------
Total long-term stress losses .........................    18.332   ksi



F R I C T I O N   &   E L O N G A T I O N   C A L C U L A T I O N S :

INPUT PARAMETERS :
Coefficient of angular friction (meu)................      0.14000 /radian
Coefficient of wobble friction (K)...................      0.00020 rad/ft
Ultimate strength of strand .........  ..............    270.00    ksi
Ratio of jacking stress to strand's ultimate strength      0.74
Anchor set ..........................................      0.38    inch
Cross-sectional area of strand ......................      0.217   inch^2
Total Number of Strands per Tendon...................     19
STRESSING ...........................................      AT LEFT END


LEGEND :
P ....... = Tendon profile type defined as: 1=reversed parabola;
            2=partial/regular parabola; 3=harped; 4=general; 5=straight;
            6=extended reversed parabola; 7=cantilever down
X1/L etc  = horizontal distances to control points in geometry of the
            tendon divided by span length
Stresses tabulated are after anchor set but before long-term losses.


TENDON ID,  GEOMETRY AND STRESS PROFILE  (Back Span D7_D9)

     LENGTH    < TENDON HEIGHT in.>  Horizontal ratios   <-  STRESS (ksi)  -->
SPAN  ft    P  start  center  right   X1/L X2/L X3/L     start   center  right
-1----2-----3----4------5------6-------7----8----9--------10------11------12-

 1   99.50  1    9.25   9.75   9.13   0.00 0.50 0.00     187.78  189.86 191.88
--------------------------------------
     99.50 ft (total length of tendon)


SUMMARY :
Average initial stress (after release)...................      189.86  ksi
Long term stress losses .................................       18.33  ksi
Final average stress ....................................      171.52  ksi
Final average force in tendon ...........................      707.19  k

Anchor set influence from left pull  (191.88ksi;0.711) ..        99.50  ft
Elongation at left pull before anchor set ...............        8.329  inch
Elongation at left pull after anchor set ................        7.954  inch


Page # 3                    Back Span D7_D9                   ADAPT-FELT 2011
--------------------------------------------------------------------------------
```

Total elongation after anchor set ..... 7.954 inch
Ratio of total elongation to
tendon length after anchor set ..... 0.080 inch/ft
Jacking force ..... 828.23 k

CRITICAL STRESS RATIOS :
At stressing 0.74; At anchorage 0.71; Max along tendon 0.71

DETAIL OF STRESSES AT 1/20TH POINTS ALONG EACH SPAN
==========
Units are in ksi

X/L	Span 1
0.00	187.78
0.05	188.03
0.10	188.23
0.15	188.44
0.20	188.64
0.25	188.84
0.30	189.05
0.35	189.25
0.40	189.45
0.45	189.66
0.50	189.86
0.55	190.06
0.60	190.26
0.65	190.47
0.70	190.67
0.75	190.87
0.80	191.07
0.85	191.28
0.90	191.48
0.95	191.68
1.00	191.88

TENDON HEIGHT AT 1/20TH POINTS ALONG EACH SPAN
==========
Units are in inch

X/L	Span 1
0.00	9.25
0.05	9.35
0.10	9.43
0.15	9.51

0.20	9.57

0.25	9.63
0.30	9.67
0.35	9.71
0.40	9.73
0.45	9.74
0.50	9.75
0.55	9.74
0.60	9.73
0.65	9.69
0.70	9.65
0.75	9.60
0.80	9.53
0.85	9.45
0.90	9.35
0.95	9.25
1.00	9.13

ADAPT Structural Concrete Software

support@adaptsoft.com, www.adaptsoft.com
ADAPT-FELT Ver. 2011
Date: 3/20/2017 Time: 11:52

1- PROJECT TITLE : 420582 FIU Pedestrian Bridge

1.1 SPECIFIC TITLE : Back Span D7_D9
1.2 FILE NAME : Back Span D7_D9

2 - TENDON STRESSES [ksi]

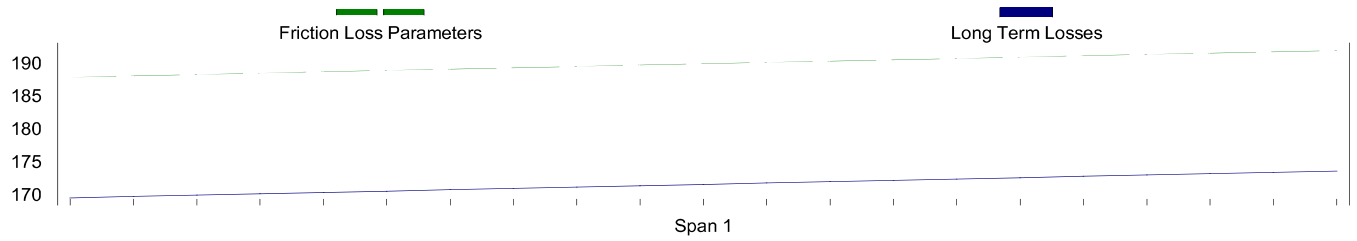

3 - TENDON PROFILE [in]

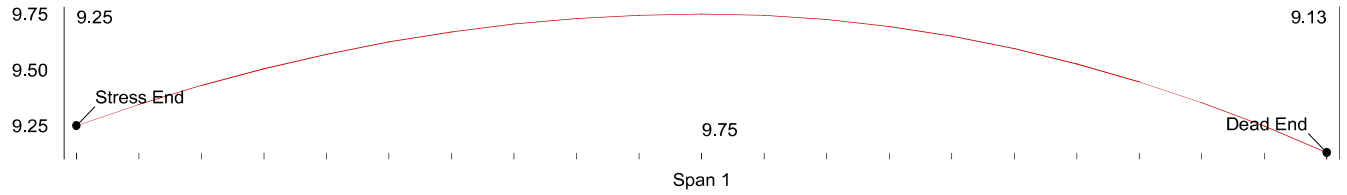

4 - SUMMARY

```
Average initial stress (after release)..................      189.86  ksi
Long term stress losses ................................       18.33  ksi
Final average stress ...................................      171.52  ksi
Final average force in tendon ..........................      707.19  k

Anchor set influence from left pull  (191.88ksi;0.711) ..       99.50  ft
Elongation at left pull before anchor set ..............       8.329  inch
Elongation at left pull after anchor set ...............       7.954  inch

Total elongation after anchor set ......................       7.954  inch
Ratio of total elongation to
      tendon length after anchor set ...................       0.080  inch/ft
Jacking force ..........................................      828.23  k


CRITICAL STRESS RATIOS :
At stressing 0.74; At anchorage 0.71; Max along tendon 0.71
```

5 - DESIGNER'S NOTES

```
-----------------------------------------------------------------------------
|                            ADAPT Corporation                              |
|                       1733 Woodside Rd., Suite 220                        |
|                       Redwood City, CA, 94061, USA                        |
-----------------------------------------------------------------------------
|                  ADAPT Corporation, Redwood City, CA, USA                 |
|               ADAPT International Pvt. Ltd., Kolkata, India               |
|                    ADAPT Latin America, Miami, FL, USA                    |
|                  support@adaptsoft.com, www.adaptsoft.com                 |
-----------------------------------------------------------------------------
|                        ADAPT-FELT  Standard  2011                         |
|           ADAPT POST-TENSIONING STRESS LOSS & ELONGATION PROGRAM           |
 This program calculates the long-term and immediate stress losses in a post-
 tensioned tendon. It outputs the elongations at the stressing ends and the
 final stress profile along the tendon.
-----------------------------------------------------------------------------
DATE: Mar 20, 2017                                          TIME: 12:03:24


P R O J E C T   T I T L E :
420582 FIU Pedestrian Bridge


S P E C I F I C   T I T L E :
Transverse_Deck


L O N G - T E R M   L O S S   C A L C U L A T I O N S :

INPUT PARAMETERS :
Post-tensioning system ................................ BONDED
Type of strand ........................................ LOW LAX
Ultimate strength of strand ............................     270.00  ksi
Modulus of elasticity of strand ........................   28500.00  ksi
Initial stress in strand (at release)...................     179.00  ksi

Concrete strength at 28 days ...........................    8500.00  psi
Average weight of concrete ............................. NORMAL
Estimated age of concrete at stressing .................       5     days
Modulus of elasticity of concrete at stressing .........    2221.00  ksi
Modulus of elasticity of concrete at 28 days ...........    5255.00  ksi
Estimate of average relative humidity ..................      80.    %
Volume to surface ratio of member ......................       9.00  in

Initial stress in concrete due to prestressing *........     870.00  psi
Initial stress in concrete due to selfweight   *........      18.00  psi
Concrete stress due to superimposed sustained loading *.      50.00  psi
* Concrete stresses refer to height at tendon centroid
  Compressive stresses shown positive


CALCULATED VALUES :
Elastic shortening .....................................     5.697   ksi
Shrinkage ..............................................     1.828   ksi
```

```
--------------------------------------------------------------------------------


Creep ..................................................     8.139   ksi
Relaxation .............................................     2.668   ksi
-----------------------------------------------------------------------
Total long-term stress losses .........................    18.332   ksi



F R I C T I O N   &   E L O N G A T I O N   C A L C U L A T I O N S :

INPUT PARAMETERS :
Coefficient of angular friction (meu)................      0.14000 /radian
Coefficient of wobble friction (K)...................      0.00020 rad/ft
Ultimate strength of strand .........  ..............    270.00    ksi
Ratio of jacking stress to strand's ultimate strength      0.80
Anchor set ..........................................      0.38    inch
Cross-sectional area of strand ......................      0.217   inch^2
Total Number of Strands per Tendon...................      4
STRESSING ...........................................      AT LEFT END


LEGEND :
P ....... = Tendon profile type defined as: 1=reversed parabola;
            2=partial/regular parabola; 3=harped; 4=general; 5=straight;
            6=extended reversed parabola; 7=cantilever down
X1/L etc  = horizontal distances to control points in geometry of the
            tendon divided by span length
Stresses tabulated are after anchor set but before long-term losses.


TENDON ID,  GEOMETRY AND STRESS PROFILE  (Transverse Tendon_Deck)

     LENGTH    < TENDON HEIGHT in.>  Horizontal ratios   <-  STRESS (ksi)  -->
SPAN  ft    P  start  center  right   X1/L X2/L X3/L     start   center  right
-1----2-----3----4------5------6-------7----8----9--------10------11------12-

 1   30.67  1   23.00  20.00  23.00   0.00 0.50 0.00     181.54  184.00 185.62
--------------------------------------
     30.67 ft (total length of tendon)


SUMMARY :
Average initial stress (after release)...................      183.98  ksi
Long term stress losses .................................       18.33  ksi
Final average stress ....................................      165.65  ksi
Final average force in tendon ...........................      143.78  k

Anchor set influence from left pull  (185.62ksi;0.687) ..        30.67  ft
Elongation at left pull before anchor set ...............        2.751  inch
Elongation at left pull after anchor set ................        2.376  inch


Page # 3                Transverse Tendon_Deck                ADAPT-FELT 2011
--------------------------------------------------------------------------------
```

Total elongation after anchor set ..... 2.376 inch
Ratio of total elongation to
tendon length after anchor set ..... 0.077 inch/ft
Jacking force ..... 187.02 k

CRITICAL STRESS RATIOS :
At stressing 0.80; At anchorage 0.69; Max along tendon 0.69

DETAIL OF STRESSES AT 1/20TH POINTS ALONG EACH SPAN
==========
Units are in ksi

X/L	Span 1
0.00	181.54
0.05	182.53
0.10	182.70
0.15	182.86
0.20	183.02
0.25	183.19
0.30	183.35
0.35	183.51
0.40	183.68
0.45	183.84
0.50	184.00
0.55	184.16
0.60	184.33
0.65	184.49
0.70	184.65
0.75	184.81
0.80	184.97
0.85	185.14
0.90	185.30
0.95	185.46
1.00	185.62

TENDON HEIGHT AT 1/20TH POINTS ALONG EACH SPAN
==========
Units are in inch

X/L	Span 1
0.00	23.00
0.05	22.43
0.10	21.92
0.15	21.47

0.20	21.08

0.25	20.75
0.30	20.48
0.35	20.27
0.40	20.12
0.45	20.03
0.50	20.00
0.55	20.03
0.60	20.12
0.65	20.27
0.70	20.48
0.75	20.75
0.80	21.08
0.85	21.47
0.90	21.92
0.95	22.43
1.00	23.00

ADAPT Structural Concrete Software

support@adaptsoft.com, www.adaptsoft.com
ADAPT-FELT Ver. 2011
Date: 3/20/2017 Time: 12:03

1- PROJECT TITLE : 420582 FIU Pedestrian Bridge

1.1 SPECIFIC TITLE : Transverse_Deck
1.2 FILE NAME : Transverse Tendon_Deck

2 - TENDON STRESSES [ksi]

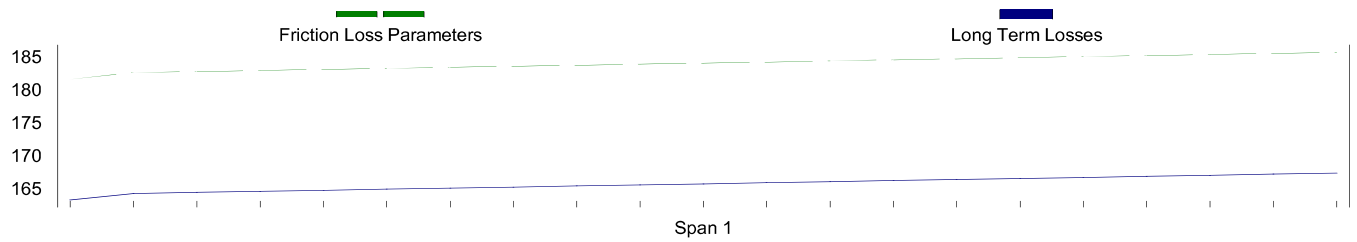

3 - TENDON PROFILE [in]

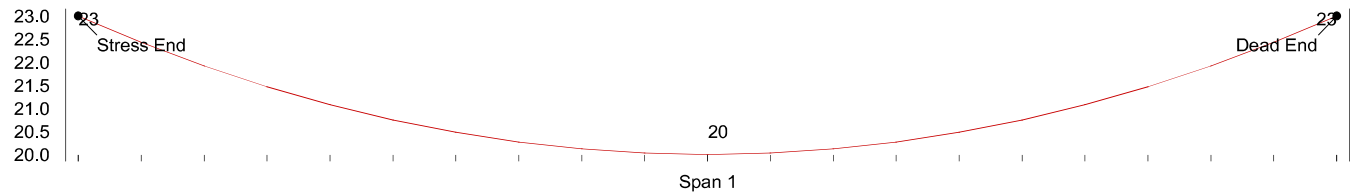

4 - SUMMARY

```
Average initial stress (after release)..................      183.98  ksi
Long term stress losses ................................       18.33  ksi
Final average stress ...................................      165.65  ksi
Final average force in tendon ..........................      143.78  k

Anchor set influence from left pull  (185.62ksi;0.687) ..       30.67  ft
Elongation at left pull before anchor set ..............       2.751  inch
Elongation at left pull after anchor set ...............       2.376  inch

Total elongation after anchor set ......................       2.376  inch
Ratio of total elongation to
      tendon length after anchor set ...................       0.077  inch/ft
Jacking force ..........................................      187.02  k


CRITICAL STRESS RATIOS :
At stressing 0.80; At anchorage 0.69; Max along tendon 0.69
```

5 - DESIGNER'S NOTES

```
-----------------------------------------------------------------------------
|                            ADAPT Corporation                              |
|                       1733 Woodside Rd., Suite 220                        |
|                       Redwood City, CA, 94061, USA                        |
-----------------------------------------------------------------------------
|                  ADAPT Corporation, Redwood City, CA, USA                 |
|               ADAPT International Pvt. Ltd., Kolkata, India               |
|                    ADAPT Latin America, Miami, FL, USA                    |
|                  support@adaptsoft.com, www.adaptsoft.com                 |
-----------------------------------------------------------------------------
|                        ADAPT-FELT  Standard  2011                         |
|           ADAPT POST-TENSIONING STRESS LOSS & ELONGATION PROGRAM           |
 This program calculates the long-term and immediate stress losses in a post-
 tensioned tendon. It outputs the elongations at the stressing ends and the
 final stress profile along the tendon.
-----------------------------------------------------------------------------
DATE: Mar 20, 2017                                          TIME: 12:06:29


P R O J E C T   T I T L E :
420582 FIU Pedestrian Bridge


S P E C I F I C   T I T L E :
Transverse_N Lndg


L O N G - T E R M   L O S S   C A L C U L A T I O N S :

INPUT PARAMETERS :
Post-tensioning system ................................ BONDED
Type of strand ........................................ LOW LAX
Ultimate strength of strand ............................     270.00  ksi
Modulus of elasticity of strand ........................   28500.00  ksi
Initial stress in strand (at release)...................     179.00  ksi

Concrete strength at 28 days ...........................    8500.00  psi
Average weight of concrete ............................. NORMAL
Estimated age of concrete at stressing .................       5     days
Modulus of elasticity of concrete at stressing .........    2221.00  ksi
Modulus of elasticity of concrete at 28 days ...........    5255.00  ksi
Estimate of average relative humidity ..................      80.    %
Volume to surface ratio of member ......................       9.00  in

Initial stress in concrete due to prestressing *........     870.00  psi
Initial stress in concrete due to selfweight   *........      18.00  psi
Concrete stress due to superimposed sustained loading *.      50.00  psi
* Concrete stresses refer to height at tendon centroid
  Compressive stresses shown positive


CALCULATED VALUES :
Elastic shortening .....................................     5.697   ksi
Shrinkage ..............................................     1.828   ksi
```

Creep ..... 8.139 ksi
Relaxation ..... 2.668 ksi

Total long-term stress losses ..... 18.332 ksi

F R I C T I O N & E L O N G A T I O N C A L C U L A T I O N S :

INPUT PARAMETERS :
Coefficient of angular friction (meu)..... 0.14000 /radian
Coefficient of wobble friction (K)..... 0.00020 rad/ft
Ultimate strength of strand .... 270.00 ksi
Ratio of jacking stress to strand's ultimate strength 0.80
Anchor set ..... 0.38 inch
Cross-sectional area of strand ..... 0.217 inch^2
Total Number of Strands per Tendon..... 4
STRESSING ..... AT LEFT END

LEGEND :
P ..... = Tendon profile type defined as: 1=reversed parabola;
2=partial/regular parabola; 3=harped; 4=general; 5=straight;
6=extended reversed parabola; 7=cantilever down
X1/L etc = horizontal distances to control points in geometry of the
tendon divided by span length
Stresses tabulated are after anchor set but before long-term losses.

TENDON ID, GEOMETRY AND STRESS PROFILE (Transverse Tendon_North Landin)

	LENGTH		< TENDON HEIGHT in.>			Horizontal ratios			<- STRESS (ksi) -->		
SPAN	ft	P	start	center	right	X1/L	X2/L	X3/L	start	center	right
-1----2-----3----4------5------6-------7----8----9--------10------11------12-											
1	30.17	1	23.00	19.25	23.00	0.00	0.50	0.00	180.12	183.06	184.92

30.17 ft (total length of tendon)

SUMMARY :
Average initial stress (after release)..... 183.03 ksi
Long term stress losses ..... 18.33 ksi
Final average stress ..... 164.70 ksi
Final average force in tendon ..... 142.96 k

Anchor set influence from left pull (184.92ksi;0.685) .. 30.17 ft
Elongation at left pull before anchor set ..... 2.700 inch
Elongation at left pull after anchor set ..... 2.325 inch

Total elongation after anchor set ..... 2.325 inch
Ratio of total elongation to
tendon length after anchor set ..... 0.077 inch/ft
Jacking force ..... 187.02 k

CRITICAL STRESS RATIOS :
At stressing 0.80; At anchorage 0.68; Max along tendon 0.68

DETAIL OF STRESSES AT 1/20TH POINTS ALONG EACH SPAN
==========
Units are in ksi

X/L	Span 1
0.00	180.12
0.05	181.37
0.10	181.55
0.15	181.74
0.20	181.93
0.25	182.12
0.30	182.31
0.35	182.50
0.40	182.68
0.45	182.87
0.50	183.06
0.55	183.25
0.60	183.43
0.65	183.62
0.70	183.81
0.75	183.99
0.80	184.18
0.85	184.37
0.90	184.55
0.95	184.74
1.00	184.92

TENDON HEIGHT AT 1/20TH POINTS ALONG EACH SPAN
==========
Units are in inch

X/L	Span 1
0.00	23.00
0.05	22.29
0.10	21.65
0.15	21.09

0.20	20.60

0.25	20.19
0.30	19.85
0.35	19.59
0.40	19.40
0.45	19.29
0.50	19.25
0.55	19.29
0.60	19.40
0.65	19.59
0.70	19.85
0.75	20.19
0.80	20.60
0.85	21.09
0.90	21.65
0.95	22.29
1.00	23.00

ADAPT Structural Concrete Software

support@adaptsoft.com, www.adaptsoft.com
ADAPT-FELT Ver. 2011
Date: 3/20/2017 Time: 12:06

1- PROJECT TITLE : 420582 FIU Pedestrian Bridge

1.1 SPECIFIC TITLE : Transverse_N Lndg
1.2 FILE NAME : Transverse Tendon_North Landing

2 - TENDON STRESSES [ksi]

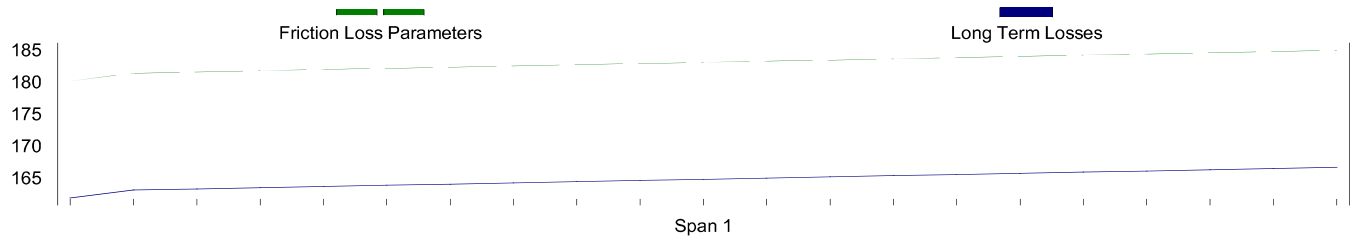

3 - TENDON PROFILE [in]

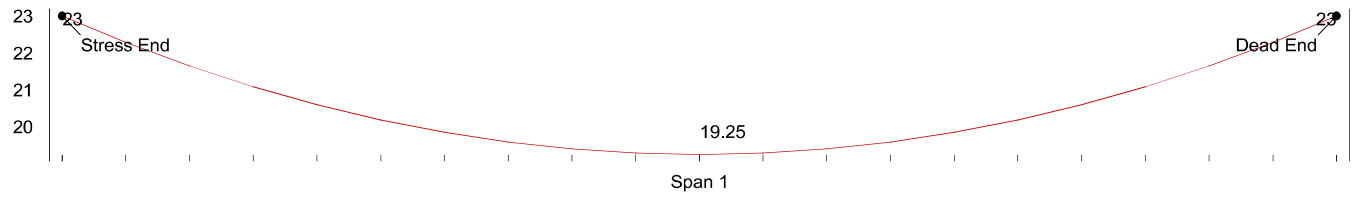

4 - SUMMARY

```
Average initial stress (after release)..................      183.03  ksi
Long term stress losses ................................       18.33  ksi
Final average stress ...................................      164.70  ksi
Final average force in tendon ..........................      142.96  k

Anchor set influence from left pull  (184.92ksi;0.685) ..       30.17  ft
Elongation at left pull before anchor set ..............       2.700  inch
Elongation at left pull after anchor set ...............       2.325  inch

Total elongation after anchor set ......................       2.325  inch
Ratio of total elongation to
      tendon length after anchor set ...................       0.077  inch/ft
Jacking force ..........................................      187.02  k


CRITICAL STRESS RATIOS :
At stressing 0.80; At anchorage 0.68; Max along tendon 0.68
```

5 - DESIGNER'S NOTES

REPRESENTATIVE FRICTION LOSS AND ELONGATION CALCULATIONS

POST-TENSIONING TENDONS
CANOPY

SHOP DRAWING REVIEW

__X__ FOR INFORMATION ONLY
_____ ACCEPTED
_____ ACCEPTED AS NOTED
_____ ACCEPTED AS NOTED & RESUBMIT
_____ NOT ACCEPTED

This review is only for general conformance with design intent of the project and general compliance with the information given in the contract documents. Review, corrections or comments made concerning the shop drawings during this review do not relieve the contractor from compliance with requirements of the drawings and specifications, nor relieve the contractor of contractual responsibility for any error or deviation from contract requirements.
The contractor is responsible for confirming and correlating all quantities, dimensions and structural capabilities - Selecting fabrication processes and techniques of construction - Coordinating his work with that of all other trades - and performing his work in a safe and satisfactory manner.

FIGG Subconsultant:

Firm:

By: _____ Date:_____

FIGG BRIDGE ENGINEERS, Inc.

By: KLB Date: 5/25/2017

FIU Pedestrian Bridge

Miami, FL

SHARATH MURTHY
LICENSE
No. 79039
STATE OF
FLORIDA
PROFESSIONAL ENGINEER

4/28/17

03/29/2017

JOB# 420582

Performed By:
Structural Technologies, LLC
2001 Blount Rd
Pompano Beach, FL 33069
954-489-3991 (P)
954-489-3992 (F)

NOTE:

The calculations contained herein are used to determine the number of tendons required in a given area and to determine the approximate long-term losses. The actual elongations shown on the VSL Shop Drawings are calculated through a program linked with AutoCAD that allows us to incorporate the output directly into our drawings.

```
-----------------------------------------------------------------------------
|                            ADAPT Corporation                              |
|                       1733 Woodside Rd., Suite 220                        |
|                       Redwood City, CA, 94061, USA                        |
-----------------------------------------------------------------------------
|                  ADAPT Corporation, Redwood City, CA, USA                 |
|               ADAPT International Pvt. Ltd., Kolkata, India               |
|                    ADAPT Latin America, Miami, FL, USA                    |
|                  support@adaptsoft.com, www.adaptsoft.com                 |
-----------------------------------------------------------------------------
|                        ADAPT-FELT  Standard  2011                         |
|           ADAPT POST-TENSIONING STRESS LOSS & ELONGATION PROGRAM           |
 This program calculates the long-term and immediate stress losses in a post-
 tensioned tendon. It outputs the elongations at the stressing ends and the
 final stress profile along the tendon.
-----------------------------------------------------------------------------
DATE: Mar 29, 2017                                          TIME: 12:09:29


P R O J E C T   T I T L E :
420582 FIU Pedestrian Bridge


S P E C I F I C   T I T L E :
Main Span_Canopy C1


L O N G - T E R M   L O S S   C A L C U L A T I O N S :

INPUT PARAMETERS :
Post-tensioning system ................................ BONDED
Type of strand ........................................ LOW LAX
Ultimate strength of strand ............................     270.00  ksi
Modulus of elasticity of strand ........................   28500.00  ksi
Initial stress in strand (at release)...................     179.00  ksi

Concrete strength at 28 days ...........................    8500.00  psi
Average weight of concrete ............................. NORMAL
Estimated age of concrete at stressing .................       5     days
Modulus of elasticity of concrete at stressing .........    2221.00  ksi
Modulus of elasticity of concrete at 28 days ...........    5255.00  ksi
Estimate of average relative humidity ..................      80.    %
Volume to surface ratio of member ......................       6.00  in

Initial stress in concrete due to prestressing *........     870.00  psi
Initial stress in concrete due to selfweight   *........      18.00  psi
Concrete stress due to superimposed sustained loading *.      50.00  psi
* Concrete stresses refer to height at tendon centroid
  Compressive stresses shown positive


CALCULATED VALUES :
Elastic shortening .....................................     5.697   ksi
Shrinkage ..............................................     2.543   ksi
```

Creep ..... 8.139 ksi
Relaxation ..... 2.650 ksi

Total long-term stress losses ..... 19.030 ksi

F R I C T I O N & E L O N G A T I O N C A L C U L A T I O N S :

INPUT PARAMETERS :
Coefficient of angular friction (meu)..... 0.14000 /radian
Coefficient of wobble friction (K)..... 0.00020 rad/ft
Ultimate strength of strand .... 270.00 ksi
Ratio of jacking stress to strand's ultimate strength 0.79
Anchor set ..... 0.38 inch
Cross-sectional area of strand ..... 0.217 inch^2
Total Number of Strands per Tendon..... 12
STRESSING ..... AT RIGHT END

LEGEND :
P ..... = Tendon profile type defined as: 1=reversed parabola;
2=partial/regular parabola; 3=harped; 4=general; 5=straight;
6=extended reversed parabola; 7=cantilever down
X1/L etc = horizontal distances to control points in geometry of the
tendon divided by span length
Stresses tabulated are after anchor set but before long-term losses.

TENDON ID, GEOMETRY AND STRESS PROFILE (Main Span_Canopy C1)

SPAN	LENGTH ft	P	< TENDON HEIGHT in.> start	center	right	Horizontal ratios X1/L	X2/L	X3/L	<- STRESS (ksi) --> start	center	right
1	273.00	1	10.13	5.63	10.13	0.00	0.50	0.00	201.52	206.64	200.60

273.00 ft (total length of tendon)

SUMMARY :
Average initial stress (after release)..... 204.02 ksi
Long term stress losses ..... 19.03 ksi
Final average stress ..... 184.99 ksi
Final average force in tendon ..... 481.72 k

Anchor set influence from right pull (206.95ksi;0.766) .. 143.80 ft
Elongation at right pull before anchor set ..... 23.827 inch
Elongation at right pull after anchor set ..... 23.452 inch

Total elongation after anchor set ..... 23.452 inch
Ratio of total elongation to
tendon length after anchor set ..... 0.086 inch/ft
Jacking force ..... 555.43 k

CRITICAL STRESS RATIOS :
At stressing 0.79; At anchorage 0.75; Max along tendon 0.77

DETAIL OF STRESSES AT 1/20TH POINTS ALONG EACH SPAN
==========
Units are in ksi

X/L	Span 1
0.00	201.52
0.05	202.09
0.10	202.66
0.15	203.23
0.20	203.80
0.25	204.37
0.30	204.95
0.35	205.52
0.40	206.10
0.45	206.68
0.50	206.64
0.55	206.06
0.60	205.47
0.65	204.89
0.70	204.30
0.75	203.71
0.80	203.12
0.85	202.53
0.90	201.93
0.95	201.34
1.00	200.60

TENDON HEIGHT AT 1/20TH POINTS ALONG EACH SPAN
==========
Units are in inch

X/L	Span 1
0.00	10.13
0.05	9.28
0.10	8.51
0.15	7.83

0.20	7.25

0.25	6.75
0.30	6.35
0.35	6.04
0.40	5.81
0.45	5.67
0.50	5.63
0.55	5.67
0.60	5.81
0.65	6.04
0.70	6.35
0.75	6.75
0.80	7.25
0.85	7.83
0.90	8.51
0.95	9.28
1.00	10.13

ADAPT Structural Concrete Software

support@adaptsoft.com, www.adaptsoft.com
ADAPT-FELT Ver. 2011
Date: 3/29/2017 Time: 12:11

1- PROJECT TITLE : 420582 FIU Pedestrian Bridge

1.1 SPECIFIC TITLE : Main Span_Canopy C1
1.2 FILE NAME : Main Span_Canopy C1

2 - TENDON STRESSES [ksi]

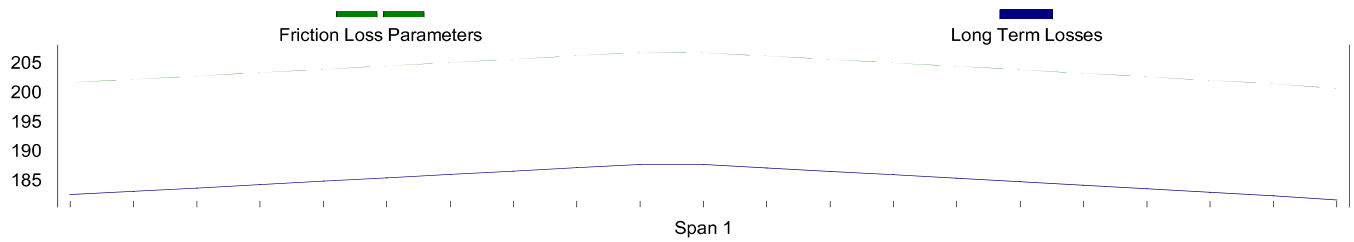

3 - TENDON PROFILE [in]

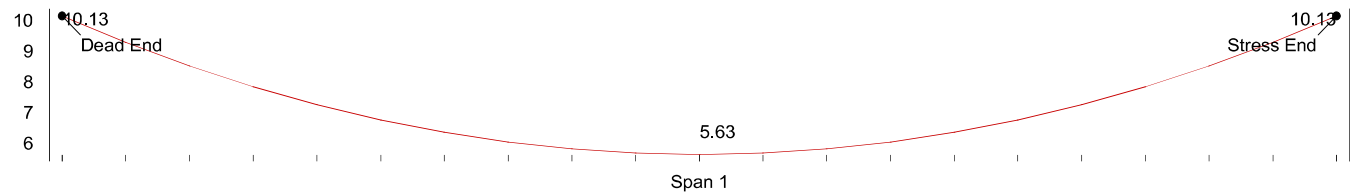

4 - SUMMARY

```
Average initial stress (after release)..................      204.02  ksi
Long term stress losses ................................       19.03  ksi
Final average stress ...................................      184.99  ksi
Final average force in tendon ..........................      481.72  k

Anchor set influence from right pull (206.95ksi;0.766) ..      143.80  ft
Elongation at right pull before anchor set .............      23.827  inch
Elongation at right pull after anchor set ..............      23.452  inch

Total elongation after anchor set ......................      23.452  inch
Ratio of total elongation to
      tendon length after anchor set ...................       0.086  inch/ft
Jacking force ..........................................      555.43  k


CRITICAL STRESS RATIOS :
At stressing 0.79; At anchorage 0.75; Max along tendon 0.77
```

5 - DESIGNER'S NOTES

```
-----------------------------------------------------------------------------
|                            ADAPT Corporation                              |
|                       1733 Woodside Rd., Suite 220                        |
|                       Redwood City, CA, 94061, USA                        |
-----------------------------------------------------------------------------
|                  ADAPT Corporation, Redwood City, CA, USA                 |
|               ADAPT International Pvt. Ltd., Kolkata, India               |
|                    ADAPT Latin America, Miami, FL, USA                    |
|                  support@adaptsoft.com, www.adaptsoft.com                 |
-----------------------------------------------------------------------------
|                        ADAPT-FELT  Standard  2011                         |
|           ADAPT POST-TENSIONING STRESS LOSS & ELONGATION PROGRAM           |
 This program calculates the long-term and immediate stress losses in a post-
 tensioned tendon. It outputs the elongations at the stressing ends and the
 final stress profile along the tendon.
-----------------------------------------------------------------------------
DATE: Mar 29, 2017                                          TIME: 12:14:59


P R O J E C T   T I T L E :
420582 FIU Pedestrian Bridge


S P E C I F I C   T I T L E :
Back Span_Canopy C2


L O N G - T E R M   L O S S   C A L C U L A T I O N S :

INPUT PARAMETERS :
Post-tensioning system ................................ BONDED
Type of strand ........................................ LOW LAX
Ultimate strength of strand ............................     270.00  ksi
Modulus of elasticity of strand ........................   28500.00  ksi
Initial stress in strand (at release)...................     179.00  ksi

Concrete strength at 28 days ...........................    8500.00  psi
Average weight of concrete ............................. NORMAL
Estimated age of concrete at stressing .................       5     days
Modulus of elasticity of concrete at stressing .........    2221.00  ksi
Modulus of elasticity of concrete at 28 days ...........    5255.00  ksi
Estimate of average relative humidity ..................      80.    %
Volume to surface ratio of member ......................       6.00  in

Initial stress in concrete due to prestressing *........     870.00  psi
Initial stress in concrete due to selfweight   *........      18.00  psi
Concrete stress due to superimposed sustained loading *.      50.00  psi
* Concrete stresses refer to height at tendon centroid
  Compressive stresses shown positive


CALCULATED VALUES :
Elastic shortening .....................................     5.697   ksi
Shrinkage ..............................................     2.543   ksi
```

```
--------------------------------------------------------------------------------


Creep ..................................................     8.139   ksi
Relaxation .............................................     2.650   ksi
-----------------------------------------------------------------------
Total long-term stress losses .........................    19.030   ksi



F R I C T I O N   &   E L O N G A T I O N   C A L C U L A T I O N S :

INPUT PARAMETERS :
Coefficient of angular friction (meu)................      0.14000 /radian
Coefficient of wobble friction (K)...................      0.00020 rad/ft
Ultimate strength of strand .........  ..............    270.00    ksi
Ratio of jacking stress to strand's ultimate strength      0.76
Anchor set ..........................................      0.38    inch
Cross-sectional area of strand ......................      0.217   inch^2
Total Number of Strands per Tendon...................     12
STRESSING ...........................................      AT RIGHT END


LEGEND :
P ....... = Tendon profile type defined as: 1=reversed parabola;
            2=partial/regular parabola; 3=harped; 4=general; 5=straight;
            6=extended reversed parabola; 7=cantilever down
X1/L etc  = horizontal distances to control points in geometry of the
            tendon divided by span length
Stresses tabulated are after anchor set but before long-term losses.


TENDON ID,  GEOMETRY AND STRESS PROFILE  (Back Span_Canopy C2)

     LENGTH    < TENDON HEIGHT in.>  Horizontal ratios   <-  STRESS (ksi)  -->
SPAN  ft    P  start  center  right   X1/L X2/L X3/L     start   center  right
-1----2-----3----4------5------6-------7----8----9--------10------11------12-

 1  173.42  1   10.13   5.63  10.13   0.00 0.50 0.00     196.22  195.00 191.05
--------------------------------------
    173.42 ft (total length of tendon)


SUMMARY :
Average initial stress (after release)...................      194.77  ksi
Long term stress losses .................................       19.03  ksi
Final average stress ....................................      175.74  ksi
Final average force in tendon ...........................      457.64  k

Anchor set influence from right pull (197.45ksi;0.731) ..      144.30  ft
Elongation at right pull before anchor set ..............      14.597  inch
Elongation at right pull after anchor set ...............      14.222  inch


Page # 3                  Back Span_Canopy C2                 ADAPT-FELT 2011
--------------------------------------------------------------------------------
```

Total elongation after anchor set ..... 14.222 inch
Ratio of total elongation to
tendon length after anchor set ..... 0.082 inch/ft
Jacking force ..... 530.83 k

CRITICAL STRESS RATIOS :
At stressing 0.76; At anchorage 0.73; Max along tendon 0.73

DETAIL OF STRESSES AT 1/20TH POINTS ALONG EACH SPAN
==========
Units are in ksi

X/L	Span 1
0.00	196.22
0.05	196.59
0.10	196.95
0.15	197.32
0.20	197.21
0.25	196.85
0.30	196.48
0.35	196.11
0.40	195.74
0.45	195.37
0.50	195.00
0.55	194.63
0.60	194.26
0.65	193.88
0.70	193.51
0.75	193.14
0.80	192.76
0.85	192.39
0.90	192.01
0.95	191.63
1.00	191.05

TENDON HEIGHT AT 1/20TH POINTS ALONG EACH SPAN
==========
Units are in inch

X/L	Span 1
0.00	10.13
0.05	9.28
0.10	8.51
0.15	7.83

0.20	7.25

0.25	6.75
0.30	6.35
0.35	6.04
0.40	5.81
0.45	5.67
0.50	5.63
0.55	5.67
0.60	5.81
0.65	6.04
0.70	6.35
0.75	6.75
0.80	7.25
0.85	7.83
0.90	8.51
0.95	9.28
1.00	10.13

ADAPT Structural Concrete Software

support@adaptsoft.com, www.adaptsoft.com
ADAPT-FELT Ver. 2011
Date: 3/29/2017 Time: 12:15

1- PROJECT TITLE : 420582 FIU Pedestrian Bridge

1.1 SPECIFIC TITLE : Back Span_Canopy C2
1.2 FILE NAME : Back Span_Canopy C2

2 - TENDON STRESSES [ksi]

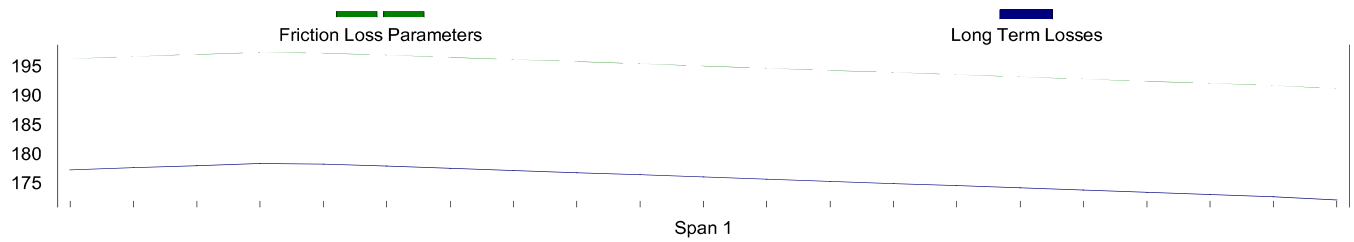

3 - TENDON PROFILE [in]

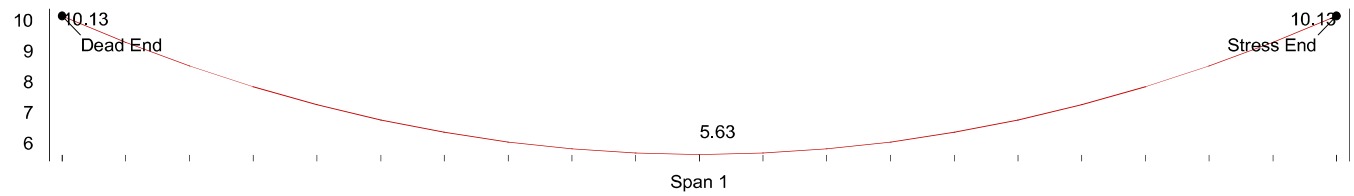

4 - SUMMARY

```
Average initial stress (after release)..................      194.77  ksi
Long term stress losses ................................       19.03  ksi
Final average stress ...................................      175.74  ksi
Final average force in tendon ..........................      457.64  k

Anchor set influence from right pull (197.45ksi;0.731) ..      144.30  ft
Elongation at right pull before anchor set .............      14.597  inch
Elongation at right pull after anchor set ..............      14.222  inch

Total elongation after anchor set ......................      14.222  inch
Ratio of total elongation to
      tendon length after anchor set ...................       0.082  inch/ft
Jacking force ..........................................      530.83  k


CRITICAL STRESS RATIOS :
At stressing 0.76; At anchorage 0.73; Max along tendon 0.73
```

5 - DESIGNER'S NOTES

```
-----------------------------------------------------------------------------
|                            ADAPT Corporation                              |
|                       1733 Woodside Rd., Suite 220                        |
|                       Redwood City, CA, 94061, USA                        |
-----------------------------------------------------------------------------
|                  ADAPT Corporation, Redwood City, CA, USA                 |
|               ADAPT International Pvt. Ltd., Kolkata, India               |
|                    ADAPT Latin America, Miami, FL, USA                    |
|                  support@adaptsoft.com, www.adaptsoft.com                 |
-----------------------------------------------------------------------------
|                        ADAPT-FELT  Standard  2011                         |
|           ADAPT POST-TENSIONING STRESS LOSS & ELONGATION PROGRAM           |
 This program calculates the long-term and immediate stress losses in a post-
 tensioned tendon. It outputs the elongations at the stressing ends and the
 final stress profile along the tendon.
-----------------------------------------------------------------------------
DATE: Mar 29, 2017                                          TIME: 13:44:05


P R O J E C T   T I T L E :
420582 FIU Pedestrian Bridge


S P E C I F I C   T I T L E :
Back Span_Canopy C5


L O N G - T E R M   L O S S   C A L C U L A T I O N S :

INPUT PARAMETERS :
Post-tensioning system ................................ BONDED
Type of strand ........................................ LOW LAX
Ultimate strength of strand ............................     270.00  ksi
Modulus of elasticity of strand ........................   28500.00  ksi
Initial stress in strand (at release)...................     179.00  ksi

Concrete strength at 28 days ...........................    8500.00  psi
Average weight of concrete ............................. NORMAL
Estimated age of concrete at stressing .................       5     days
Modulus of elasticity of concrete at stressing .........    2221.00  ksi
Modulus of elasticity of concrete at 28 days ...........    5255.00  ksi
Estimate of average relative humidity ..................      80.    %
Volume to surface ratio of member ......................       6.00  in

Initial stress in concrete due to prestressing *........     870.00  psi
Initial stress in concrete due to selfweight   *........      18.00  psi
Concrete stress due to superimposed sustained loading *.      50.00  psi
* Concrete stresses refer to height at tendon centroid
  Compressive stresses shown positive


CALCULATED VALUES :
Elastic shortening .....................................     5.697   ksi
Shrinkage ..............................................     2.543   ksi
```

```
--------------------------------------------------------------------------------


Creep ..................................................     8.139   ksi
Relaxation .............................................     2.650   ksi
-----------------------------------------------------------------------
Total long-term stress losses .........................    19.030   ksi



F R I C T I O N   &   E L O N G A T I O N   C A L C U L A T I O N S :

INPUT PARAMETERS :
Coefficient of angular friction (meu)................      0.14000 /radian
Coefficient of wobble friction (K)...................      0.00020 rad/ft
Ultimate strength of strand .........  ..............    270.00    ksi
Ratio of jacking stress to strand's ultimate strength      0.74
Anchor set ..........................................      0.38    inch
Cross-sectional area of strand ......................      0.217   inch^2
Total Number of Strands per Tendon...................     12
STRESSING ...........................................      AT RIGHT END


LEGEND :
P ....... = Tendon profile type defined as: 1=reversed parabola;
            2=partial/regular parabola; 3=harped; 4=general; 5=straight;
            6=extended reversed parabola; 7=cantilever down
X1/L etc  = horizontal distances to control points in geometry of the
            tendon divided by span length
Stresses tabulated are after anchor set but before long-term losses.


TENDON ID,  GEOMETRY AND STRESS PROFILE  (Back Span_Canopy C5)

     LENGTH    < TENDON HEIGHT in.>  Horizontal ratios   <-  STRESS (ksi)  -->
SPAN  ft    P  start  center  right   X1/L X2/L X3/L     start   center  right
-1----2-----3----4------5------6-------7----8----9--------10------11------12-

 1   97.42  1   10.25   5.63  10.25   0.00 0.50 0.00     189.74  187.41 184.67
--------------------------------------
     97.42 ft (total length of tendon)


SUMMARY :
Average initial stress (after release)...................      187.39  ksi
Long term stress losses .................................       19.03  ksi
Final average stress ....................................      168.36  ksi
Final average force in tendon ...........................      438.42  k

Anchor set influence from right pull (189.74ksi;0.703) ..        97.42  ft
Elongation at right pull before anchor set ..............       8.061  inch
Elongation at right pull after anchor set ...............       7.686  inch


Page # 3                  Back Span_Canopy C5                 ADAPT-FELT 2011
--------------------------------------------------------------------------------
```

Total elongation after anchor set ..... 7.686 inch
Ratio of total elongation to
tendon length after anchor set ..... 0.079 inch/ft
Jacking force ..... 518.87 k

CRITICAL STRESS RATIOS :
At stressing 0.74; At anchorage 0.70; Max along tendon 0.70

DETAIL OF STRESSES AT 1/20TH POINTS ALONG EACH SPAN
==========
Units are in ksi

X/L	Span 1
0.00	189.74
0.05	189.51
0.10	189.28
0.15	189.04
0.20	188.81
0.25	188.58
0.30	188.34
0.35	188.11
0.40	187.88
0.45	187.64
0.50	187.41
0.55	187.17
0.60	186.94
0.65	186.70
0.70	186.46
0.75	186.23
0.80	185.99
0.85	185.76
0.90	185.52
0.95	185.28
1.00	184.67

TENDON HEIGHT AT 1/20TH POINTS ALONG EACH SPAN
==========
Units are in inch

X/L	Span 1
0.00	10.25
0.05	9.37
0.10	8.59
0.15	7.89

0.20	7.29

0.25	6.79
0.30	6.37
0.35	6.05
0.40	5.81
0.45	5.68
0.50	5.63
0.55	5.68
0.60	5.81
0.65	6.05
0.70	6.37
0.75	6.79
0.80	7.29
0.85	7.89
0.90	8.59
0.95	9.37
1.00	10.25

ADAPT Structural Concrete Software

support@adaptsoft.com, www.adaptsoft.com
ADAPT-FELT Ver. 2011
Date: 3/29/2017 Time: 13:44

1- PROJECT TITLE : 420582 FIU Pedestrian Bridge

1.1 SPECIFIC TITLE : Back Span_Canopy C5
1.2 FILE NAME : Back Span_Canopy C5

2 - TENDON STRESSES [ksi]

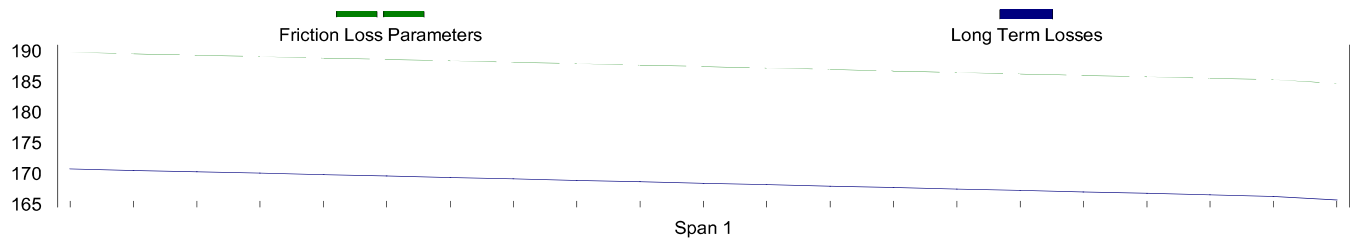

3 - TENDON PROFILE [in]

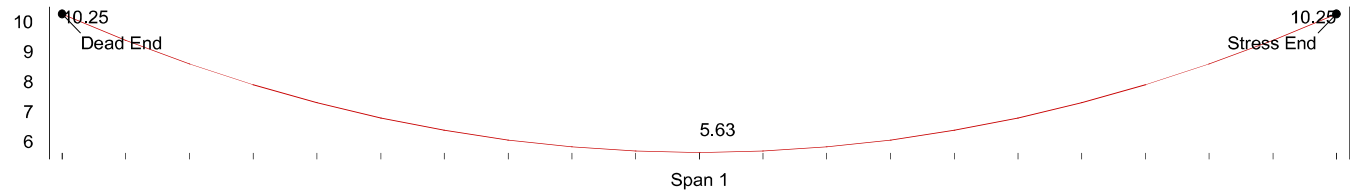

4 - SUMMARY

```
Average initial stress (after release)..................      187.39  ksi
Long term stress losses ................................       19.03  ksi
Final average stress ...................................      168.36  ksi
Final average force in tendon ..........................      438.42  k

Anchor set influence from right pull (189.74ksi;0.703) ..       97.42  ft
Elongation at right pull before anchor set .............       8.061  inch
Elongation at right pull after anchor set ..............       7.686  inch

Total elongation after anchor set ......................       7.686  inch
Ratio of total elongation to
      tendon length after anchor set ...................       0.079  inch/ft
Jacking force ..........................................      518.87  k


CRITICAL STRESS RATIOS :
At stressing 0.74; At anchorage 0.70; Max along tendon 0.70
```

5 - DESIGNER'S NOTES

NCS 6-12 & 6-19 SYSTEM
LOCAL ZONE REINFORCEMENT DESIGN

RELEASED FOR CONSTRUCTION AS NOTED

Structures Design Office – District 6
Department of Transportation
STATE OF FLORIDA

Date: 6/27/17
Reviewed By: CEG

Review is for general conformance with Contract Documents. Sole responsibility for correctness of dimensions, details, quantities and safety during fabrication and erection shall remain with the Contractor.

FIU PEDESTRIAN BRIDGE

MIAMI, FL

SHOP DRAWING REVIEW

__X__ FOR INFORMATION ONLY
_____ ACCEPTED
_____ ACCEPTED AS NOTED
_____ ACCEPTED AS NOTED & RESUBMIT
_____ NOT ACCEPTED

This review is only for general conformance with design intent of the project and general compliance with the information given in the contract documents. Review, corrections or comments made concerning the shop drawings during this review do not relieve the contractor from compliance with requirements of the drawings and specifications, nor relieve the contractor of contractual responsibility for any error or deviation from contract requirements.
The contractor is responsible for confirming and correlating all quantities, dimensions and structural capabilities - Selecting fabrication processes and techniques of construction - Coordinating his work with that of all other trades - and performing his work in a safe and satisfactory manner.

FIGG Subconsultant:
Firm:
By: _____ Date: _____

FIGG BRIDGE ENGINEERS, Inc.
By: KLB Date: 5/25/2017

SHARATH MURTHY
LICENSE
No. 79039
STATE OF FLORIDA
PROFESSIONAL ENGINEER
4/28/17

04/27/2017

JOB # 420582

Performed By:
STRUCTURAL TECHNOLOGIES, LLC
2001 Blount Rd
Pompano Beach, FL 33069
954-489-3991 (P)
954-489-3992 (F)

VStructural LLc	SUBJECT :	Main Span Longitudinal - 6-12 system		
	PROJECT:	FIU Bridge	PAGE :	1
	DESIGNED BY :		DATE :	3/21/2017

MATERIALS

CONCRETE 28th DAY STRENGTH	f'c =	6,500	psi
CONCRETE STRENGTH AT STRESSING	f'ci =	6,000	psi
CONCRETE TYPE	[1 or 2]	1	NWC
REINFORCEMENT REBAR YIELD STRENGTH	fy =	75	ksi
POST-TENSIONING STRANDS	fpu =	270	ksi

ANCHORAGE DATA

SIZE OF P/T STRAND		0.60	in
	Ap =	0.217	sq. in.
JACKING STRESS		0.75	
VSL ANCHOR		ECI 6-12	
NUMBER OF STRANDS	n_s =	12	
DIAMETER OR SIDE OF BEARING PLATE	dp =	9.88	in
RADIUS OF CORNER (ECI ONLY)	rp =	2.76	in
DIAMETER OF HOLE	dh =	3.7	in
SUPPORTING CONCRETE Long :	a =	20.00	in
Short :	b =	16.00	in

CALL OUT IN SHOP DWG

DESIGN PARAMETERS

LOAD FACTOR	γ =	1.2	
CALIBRATION FACTOR	η =	1.00	
STRENGTH REDUCTION FACTOR (Per AASHTO LRFD Specifications Article 5.5.4.2)	ϕ =	0.80	

ANCHOR : ECI 6-12
STRANDS : 12 - 0.6" DIA.
SPIRAL : dia= 13.00 in.
size # 4 bar
pitch= 3 in.
# of turns= 7
TIES : none

DESIGN FORCE

Factored Load, Pu

$$Pu = \gamma * n_s * A_{ps} * f_{jack}$$
$$= 632.77 \text{ k}$$

BEARING PLATE

Gross bearing plate area	Ab =	91.08	sq. in.
Duct Opening	Ad =	10.75	sq. in.
Net bearing plate area	Abn =	80.32	sq. in.

SUPPORTING CONCRETE

Effective Short Dimension:
b = 16.00
3dp = 29.64 b_{eff} = 16.00 in

Effective Long Dimension:
a = 20.00
3dp = 29.64
4beff-3dp = 34.36 a_{eff} = 20.00 in

Supporting area:
$A = a_{eff} * b_{eff}$ = 320.00 sq. in.

LOCAL CONFINEMENT

SPIRAL:

Diameter	D =	13.00	in
Pitch	p =	3	in
Rebar size	#	4	
	As =	0.2	sq. in.

ORTHOGONAL TIES (leave blank if no lateral ties)

Length of confined area	Lx =		in
	Ly =		in
Number of spaces between cross ties			
	nx =	1	
	ny =	1	
Tie Spacing	s =	2.25	in
Rebar size	#		
	A_t =	0.00	sq. in.

LOCAL ZONE STRENGTH

Due to Surrounding Concrete

$$Pc = 0.8 * f'_{ci} * \sqrt{\frac{A}{A_b}} * A_{bn}$$
$$= 722.70 \text{ k}$$

Due to spiral confinement Reinforcement

Effective area confined by spiral:

$$A_{cs} = \frac{D^2 * \pi}{4} * (1 - \frac{p}{2*D})^2 - A_d$$
$$= 93.12 \text{ sq. in.}$$

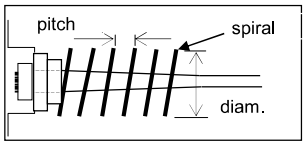

Lateral confinement from spiral — Limit to 1.2 ksi ? y

$$f_{lat_s} = \frac{2 * As * fy}{D * p}$$
$$= 0.77 \text{ ksi} \quad <= 1.20\text{ksi OK}$$

Local Strength due to spiral Reinforcement

$$Ps = 4 * f_{lat_s} * Acs$$
$$= 286.51 \text{ k}$$

Local Strength due to Confinement of Orthogonal Ties

Effective area confined by ties:

$$\alpha_X = A \tan[\frac{s}{L_x / n_x}] = 0.0000 \text{ rad}$$
$$\alpha_Y = A \tan[\frac{s}{L_Y / n_Y}] = 0.0000 \text{ rad}$$

$$Act = L_x * L_y - \frac{L_x^2}{4 * n_x * \cos \alpha_x} - \frac{L_y^2}{4 * n_y * \cos \alpha_y} - A_d$$
$$= 0.00 \text{ sq. in.}$$

Lateral confinement pressure from ties:

$$f_{lat_t} = \text{Min } \{A_t * f_y * (n_x + 1)/L_x * s ; A_t * f_y * (n_y + 1)/L_y * s\}$$
$$= 0.000 \text{ ksi} \quad <= 1.20\text{ksi OK}$$

Local Strength due to confinement by orthogonal ties:

$$Pt = 4 * f_{lat_t} * Act$$
$$= 0.00 \text{ k}$$

Nominal Local Zone Strength

$$Pn = \eta * (Pc + Ps + Pt)$$
$$= 1,009.21 \text{ k}$$

Ultimate Strength of Local Zone:

ϕPn = 807.37 k > 632.77 k

Okay!

8006 Haute Ct. Springfield, VA 22150 (703) 451-4300 fax (703) 451-0862

VStructural LLc	SUBJECT :	Main Span Longitudinal - ECI 6-19		
	PROJECT:	FIU Bridge	PAGE :	1
	DESIGNED BY :		DATE :	3/21/2017

MATERIALS

CONCRETE 28th DAY STRENGTH	f'c =	6,500	psi	
CONCRETE STRENGTH AT STRESSING	f'ci =	6,000	psi	
CONCRETE TYPE	[1 or 2]	1	NWC	
REINFORCEMENT REBAR YIELD STRENGTH	fy =	75	ksi	
POST-TENSIONING STRANDS	fpu =	270	ksi	

ANCHORAGE DATA

SIZE OF P/T STRAND		0.60	in
	Ap =	0.217	sq. in.
JACKING STRESS		0.75	
VSL ANCHOR		ECI 6-19	
NUMBER OF STRANDS	n_s =	19	
DIAMETER OR SIDE OF BEARING PLATE	dp =	11.42	in
RADIUS OF CORNER (ECI ONLY)	rp =	3.15	in
DIAMETER OF HOLE	dh =	5.36	in
SUPPORTING CONCRETE Long :	a =	16.00	in
Short :	b =	16.00	in

CALL OUT IN SHOP DWG

DESIGN PARAMETERS

LOAD FACTOR	γ =	1.2	
CALIBRATION FACTOR	η =	1.00	
STRENGTH REDUCTION FACTOR (Per AASHTO LRFD Specifications Article 5.5.4.2)	ϕ =	0.80	

ANCHOR : ECI 6-19
STRANDS : 19 - 0.6" DIA.
SPIRAL : dia= 15.00 in.
size # 5 bar
pitch= 2.5 in.
# of turns= 9
TIES : none

DESIGN FORCE

Factored Load, Pu

$$Pu = \gamma * n_s * A_{ps} * f_{jack}$$
$$= 1{,}001.89 \text{ k}$$

BEARING PLATE

Gross bearing plate area	Ab =	121.90	sq. in.
Duct Opening	Ad =	22.56	sq. in.
Net bearing plate area	Abn =	99.33	sq. in.

SUPPORTING CONCRETE

Effective Short Dimension:
b = 16.00
3dp = 34.26 b_{eff} = 16.00 in

Effective Long Dimension:
a = 16.00
3dp = 34.26
4beff-3dp = 29.74 a_{eff} = 16.00 in

Supporting area:
$A = a_{eff} * b_{eff}$ = 256.00 sq. in.

LOCAL CONFINEMENT

SPIRAL:

Diameter	D =	15.00	in
Pitch	p =	2.5	in
Rebar size	#	5	
	As =	0.31	sq. in.

ORTHOGONAL TIES (leave blank if no lateral ties)

Length of confined area	Lx =		in
	Ly =		in
Number of spaces between cross ties	nx =	1	
	ny =	1	
Tie Spacing	s =	2.25	in
Rebar size	#		
	A_t =	0.00	sq. in.

LOCAL ZONE STRENGTH

Due to Surrounding Concrete

$$Pc = 0.8 * f'_{ci} * \sqrt{\frac{A}{A_b}} * A_{bn}$$
$$= 690.97 \text{ k}$$

Due to spiral confinement Reinforcement

Effective area confined by spiral:

$$A_{cs} = \frac{D^2 * \pi}{4} * (1 - \frac{p}{2*D})^2 - A_d$$
$$= 125.93 \text{ sq. in.}$$

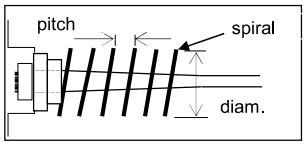

Lateral confinement from spiral — Limit to 1.2 ksi ? y

$$f_{lat_s} = \frac{2 * As * fy}{D * p}$$
$$= 1.24 \text{ ksi}$$

Therefore: Use: 1.20 ksi

Local Strength due to spiral Reinforcement

$$Ps = 4 * f_{lat_s} * Acs$$
$$= 604.44 \text{ k}$$

Local Strength due to Confinement of Orthogonal Ties

Effective area confined by ties:

$$\alpha_X = A \tan[\frac{s}{L_x / n_x}] = 0.0000 \text{ rad}$$
$$\alpha_Y = A \tan[\frac{s}{L_Y / n_Y}] = 0.0000 \text{ rad}$$

$$Act = L_x * L_y - \frac{L_x^2}{4 * n_x * \cos \alpha_x} - \frac{L_y^2}{4 * n_y * \cos \alpha_y} - A_d$$
$$= 0.00 \text{ sq. in.}$$

Lateral confinement pressure from ties:

$$f_{lat_t} = \text{Min } \{A_t * f_y * (n_x + 1)/L_x * s ; A_t * f_y * (n_y + 1)/L_y * s\}$$
$$= 0.000 \text{ ksi} \quad <= 1.20\text{ksi OK}$$

Local Strength due to confinement by orthogonal ties:

$$Pt = 4 * f_{lat_t} * Act$$
$$= 0.00 \text{ k}$$

Nominal Local Zone Strength

$$Pn = \eta * (Pc + Ps + Pt)$$
$$= 1{,}295.42 \text{ k}$$

Ultimate Strength of Local Zone:

ϕPn = 1,036.33 k > 1,001.89 k

Okay!

THESE CALCULATIONS ARE FOR 15" DIA SPIRAL. SHOW CALCULATIONS FOR 14" DIA SPIRAL AS WELL.

8006 Haute Ct. Springfield, VA 22150 (703) 451-4300 fax (703) 451-0862