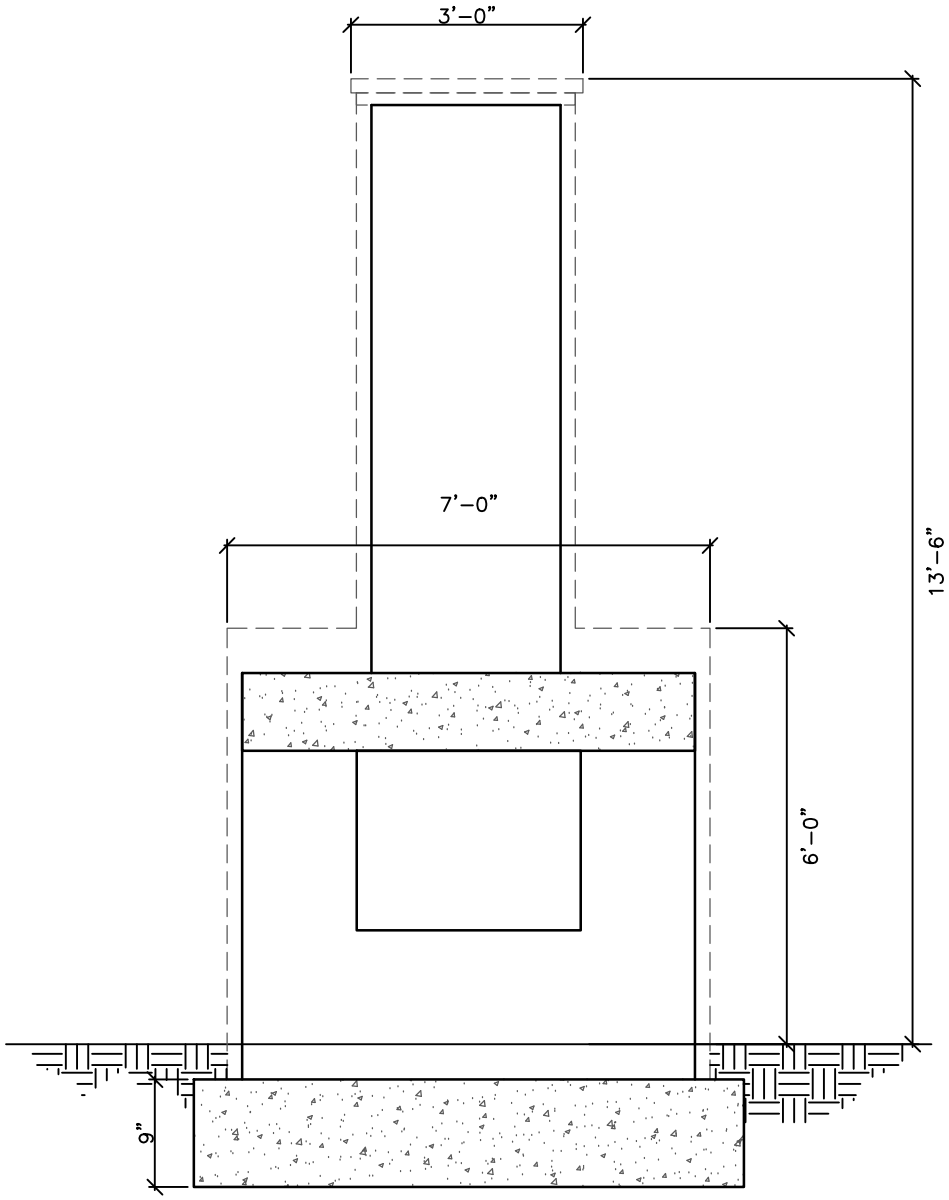
3'–0"
7'–0"
13'–6"
6'–0"
9"

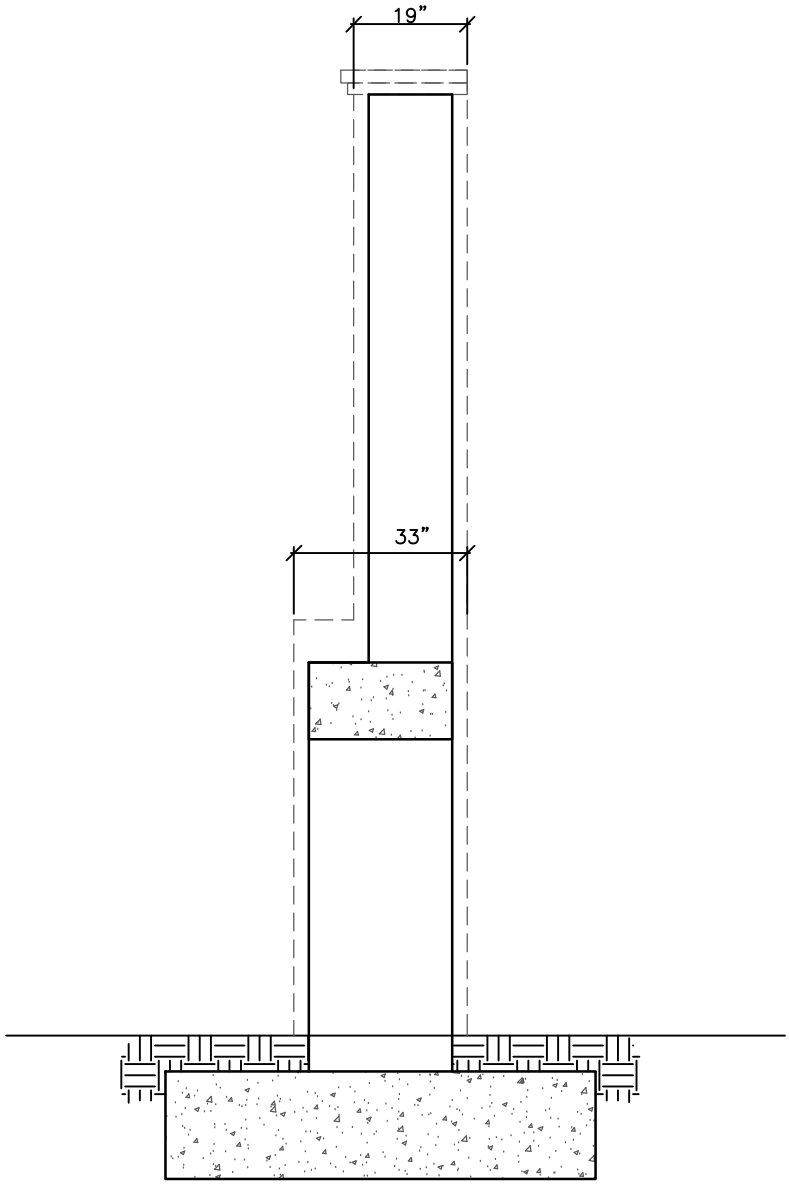
19"
33"